Route 35 Bridge Replacement

A Design-Build Project

Southampton County, Virginia

From: 0.072 Miles West of Southampton County Line
To: 0.364 Miles West of Southampton County Line

Proposal Submittal

Letter of Submittal and Attachments

State Project No.: (NFO) 0035-087-112, PE-101, RW-201, C-501, B-604
Federal Project No.: BR-087-5(014)
Contract ID Number: C00081457DB57

Proposal Submitted by:

WAGMAN
BRIDGING GENERATIONS · SINCE 1902

JOHNSON, MIRMIRAN & THOMPSON
Engineering A Brighter Future®

9.11.2013

ATTACHMENT 4.0.1.1

ROUTE 35 BRIDGE REPLACEMENT

LETTER OF SUBMITTAL CHECKLIST AND CONTENTS

Offerors shall furnish a copy of this Letter of Submittal Checklist, with the page references added, with the Letter of Submittal.

Letter of Submittal Component	Form (if any)	RFP Part 1 Cross Reference	Page Reference
Letter of Submittal Checklist and Contents	Attachment 4.0.1.1	Section 4.0.1.1	Behind Cover
Acknowledgement of RFP, Revisions, and/or Addenda	Attachment 3.4 (Form C-78-RFP)	Sections 3.4; 4.0.1.1	Before Letter of Submittal
Letter of Submittal	NA	Sections 4.1	Tab 4.1.1
Letter of Submittal on Offeror's letterhead	NA	Section 4.1.1	Page 1 of 2
Offeror's full legal name and address	NA	Section 4.1.1	Page 1 of 2
Authorized representative's original signature	NA	Section 4.1.1	Page 1 of 2
Declaration of intent	NA	Section 4.1.2	Page 1 of 2
120 day declaration	NA	Section 4.1.3	Page 1 of 2
Point of Contact information	NA	Section 4.1.4	Page 1 of 2
Principal Officer information	NA	Section 4.1.5	Page 2 of 2
Offeror's Corporate Structure	NA	Section 4.1.6	Page 2 of 2
Full Legal Name of Lead Contractor and Lead Designer	NA	Section 4.1.7	Page 2 of 2
Offeror's VDOT prequalification information	NA	Section 4.1.8	Page 2 of 2
DBE statement confirming Offeror is committed to achieving the required 12% DBE goal	NA	Section 4.1.9	Page 2 of 2
Interim Milestone and Final Completion Dates	NA	Section 4.1.10	Page 2 of 2

ATTACHMENT 4.0.1.1

ROUTE 35 BRIDGE REPLACEMENT

LETTER OF SUBMITTAL CHECKLIST AND CONTENTS

Letter of Submittal Component	Form (if any)	RFP Part 1 Cross Reference	Page Reference
Attachments to the Letter of Submittal	NA	Section 4.2	Tab 4.2
Affiliated and/ or Subsidiary Companies	Attachment 4.2.1	Section 4.2.1	Tab 4.2.1
Certification Regarding Debarment Forms	Attachment 4.2.20(a) Attachment 4.2.2(b)	Section 4.2.2	Tab 4.2.2
Offeror's VDOT prequalification certificate	NA	Section 4.2.3	Tab 4.2.3
Evidence of obtaining bonding	NA	Section 4.2.4	Tab 4.2.4
Full size copies of DPOR licenses and SCC registrations	NA	Section 4.2.5	Tab 4.2.5
SCC registration information - businesses	Attachment 4.2.5	Section 4.2.5.1	Tab 4.2.5
DPOR registration information - businesses	Attachment 4.2.5	Section 4.2.5.2	Tab 4.2.5
Lead Contractor Work History Form	Attachment 4.2.6(a)	Section 4.2.6	Tab 4.2.6
Lead Designer Work History Form	Attachment 4.2.6(b)	Section 4.2.6	Tab 4.2.6
Conceptual Roadway Plans	NA	Section 4.2.7	Tab 4.2.7
Conceptual Bridge Plans	NA	Section 4.2.8	Tab 4.2.8

Form C-78-RFP

ATTACHMENT 3.4

COMMONWEALTH OF VIRGINIA
DEPARTMENT OF TRANSPORTATION

RFP NO. C00081457DB57

PROJECT NO.: (NFO) 0035-087-112, PE-101, RW-201, C-501, B-604

ACKNOWLEDGEMENT OF RFP, REVISION AND/OR ADDENDA

Acknowledgement shall be made of receipt of the Request for Proposals (RFP) and/or any and all revisions and/or addenda pertaining to the above designated project which are issued by the Department prior to the Letter of Submittal submission date shown herein. Failure to include this acknowledgement in the Letter of Submittal may result in the rejection of your proposal.

By signing this Attachment 3.4, the Offeror acknowledges receipt of the RFP and/or following revisions and/or addenda to the RFP for the above designated project which were issued under cover letter(s) of the date(s) shown hereon:

1. Cover letter of July 3, 2013 – RFP
   (Date)
2. Cover letter of August 13, 2013 – RFP Addendum No. 1
   (Date)
3. Cover letter of August 20, 2013 – RFP Addendum No. 2
   (Date)
4. Cover letter of September 4, 2013 – RFP Addendum No. 3
   (Date)

Todd E Becker — September 11, 2013

SIGNATURE — DATE

Todd E. Becker — Senior V.P. of Operations

PRINTED NAME — TITLE

VDOT
Virginia Department of Transportation

SECTION 4.1
LETTER OF SUBMITTAL

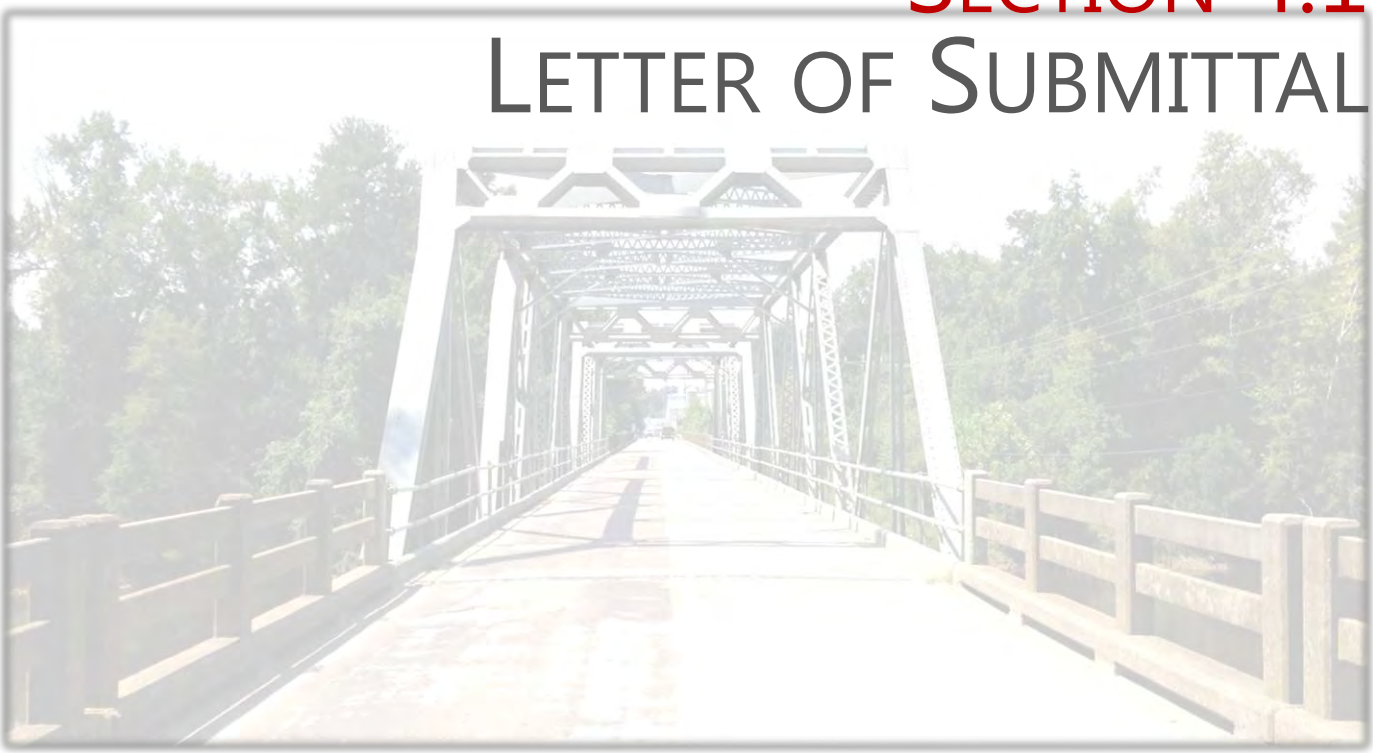

WAGMAN
BRIDGING GENERATIONS · SINCE 1902

WAGMAN

BRIDGING GENERATIONS · SINCE 1902

September 11, 2013

RE: **Letter of Submittal**
Route 35 Bridge Replacement
Southampton County, Virginia
State Project No.: (NFO) 0035-087-112, PE-101, RW-201, C501, B604
Federal Project No.: BR-087-5(014)
Contract ID Number: C00081457DB57

Joseph Clarke, P.E.
Virginia Department of Transportation (VDOT)
1401 East Broad Street
Annex Building, 8th Floor
Richmond, VA 23219

Dear Mr. Clarke:

G.A. & F.C. Wagman, Inc. (Wagman) is pleased to submit one (1) original paper version of our Letter of Submittal, with full supporting documentation, which bear original signatures; and one (1) CD-ROM containing the entire Letter of Submittal along with attachments in a single cohesive Adobe PDF file to the Virginia Department of Transportation (VDOT) to provide Design-Build (D-B) services for the Route 35 Bridge Replacement Project in Southampton County, Virginia. We have carefully reviewed the Request for Proposals (RFP), RFP Addendum Numbers 1, 2 & 3, and RFP Questions and Answers; attended the Pre-Proposal and Utility Meeting; and visited the project site multiple times.

PROJECT TEAM

G.A. & F.C. Wagman, Inc. has assembled a strong and efficient team of highly-qualified professionals with the necessary expertise to successfully meet the goals and objectives of this project. Wagman has selected **Johnson, Mirmiran & Thompson (JMT)** as our lead design firm to provide all engineering services for this project. Wagman and JMT have excellent reputations in the design and construction of similar projects, with proven prior experience in delivering quality D-B projects. Other members of our team include EEE Consulting, Inc., ECS Mid-Atlantic, LLC, Hassan Water Resources, PLC and Quinn Consulting Services, Inc.

Section 4.1.1 Offeror's Full Legal Name

The Offeror's full legal name and address is as stated herein and shall be the legal entity who will execute the Contract with VDOT.

G.A. & F.C. Wagman, Inc.
3290 N. Susquehanna Trail
York, PA 17406-9754

Section 4.1.2 Declaration of Offeror's Intent

It is the Offeror's intent, if selected, to enter into a contract with VDOT for the Project referenced herein in accordance with the terms of the RFP.

Section 4.1.3 Effective Duration of Proposal

Pursuant to Part 1, Section 8.2, the offer represented by the Price Proposal will remain in full force and effect for one hundred twenty (120) days after the date the Proposal is submitted to VDOT ("Letter of Submittal & Price Proposal Due Date").

Section 4.1.4 Point Of Contact

Wagman's official representative and designated ***Point Of Contact*** for all project-related communications is Wagman's ***Vice President, Division Manager Mr. David W. Lyle***. Mr. Lyle can be reached as follows:

Address	Phone	Mobile	Fax	Email
5911 Nena Grove Lane Chester, VA 23831-3715	804-778-4444	804-731-3707	804-778-4929	dwlyle@wagman.com

Section 4.1.5 Principal Officer

The **Principal Officer** of G.A. & F.C. Wagman, Inc. with whom a D-B contract would be written is Wagman's principal officer and ***Senior Vice President Operations, Mr. Todd E. Becker***. Mr. Becker can be reached as follows:

Address	Phone	Mobile	Fax	Email
3290 N. Susquehanna Trail York, PA 17406-9754	717-764-8521 x320	717-577-4251	717-767-5457	tebecker@wagman.com

Section 4.1.6 Structure of Offeror

G.A. & F.C. Wagman, Inc. is an active, registered Corporation in the Commonwealth of Virginia and will take financial responsibility for this project. A single 100% performance bond and a single 100% payment bond will be provided for the total contract value and time period. Currently, there are no liability limitations on behalf of G.A. & F.C. Wagman, Inc.

Section 4.1.7 Full Legal Name of Both Lead Contractor and Lead Designer

Lead Contractor's full legal name is: G.A. & F.C. Wagman, Inc.
Lead Designer's full legal name is: Johnson Mirmiran & Thompson, Inc.

Section 4.1.8 Offeror's Prequalification

G.A. & F.C. Wagman's VDOT prequalification number is W002 and has a status of active. G.A. & F.C. Wagman is in good standing and prequalified to bid on the Project.

Section 4.1.9 Commitment to DBE Participation Goal

G.A. & F.C. Wagman, Inc. formally commits to achieving VDOT's twelve percent (12%) Disadvantaged Business Enterprise (DBE) participation goal for the entire value of the contract on the Route 35 Bridge Replacement D-B Project.

Section 4.1.10 Milestone Dates

G.A. & F.C. Wagman, Inc. is committed to achieving the following proposed milestone dates:

Interim Milestone Date: November 4th, 2015
Final Completion Date: November 30th, 2015

Wagman and JMT have long and successful histories of serving VDOT on numerous projects. As a single, integrated D-B Team, we will design and construct the Route 35 Bridge Replacement Design-Build Project in a manner to ensure the greatest opportunity for success. We will create a transparent working relationship with VDOT and 3rd party stakeholders to promote trust, confidence, and collaboration.

Respectfully Submitted,
G.A. & F.C. Wagman, Inc.

Todd E. Becker
Senior Vice President of Operations

VDOT
Virginia Department of Transportation

Section 4.2
Attachments to Letter of Submittal

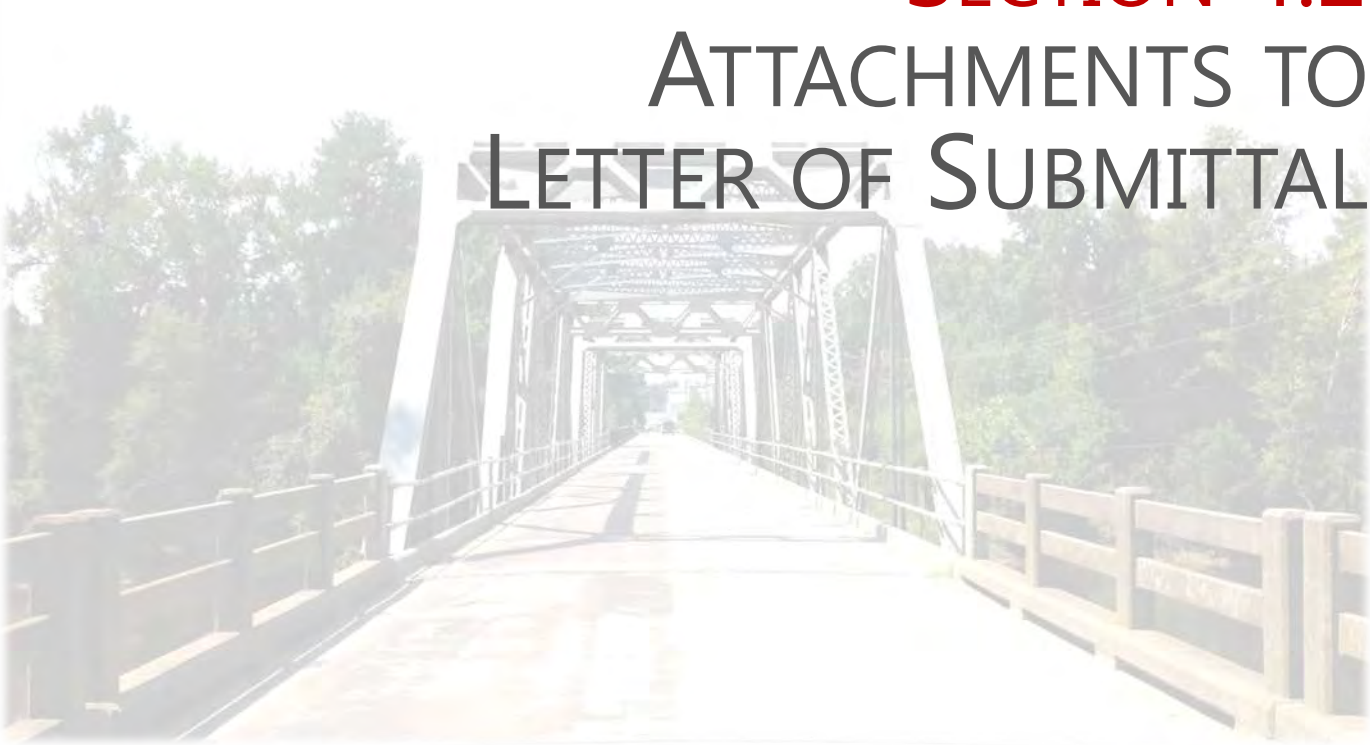

WAGMAN
Bridging Generations · Since 1902

VDOT
Virginia Department of Transportation

SECTION 4.2.1
AFFILIATED/SUBSIDIARY COMPANIES LIST

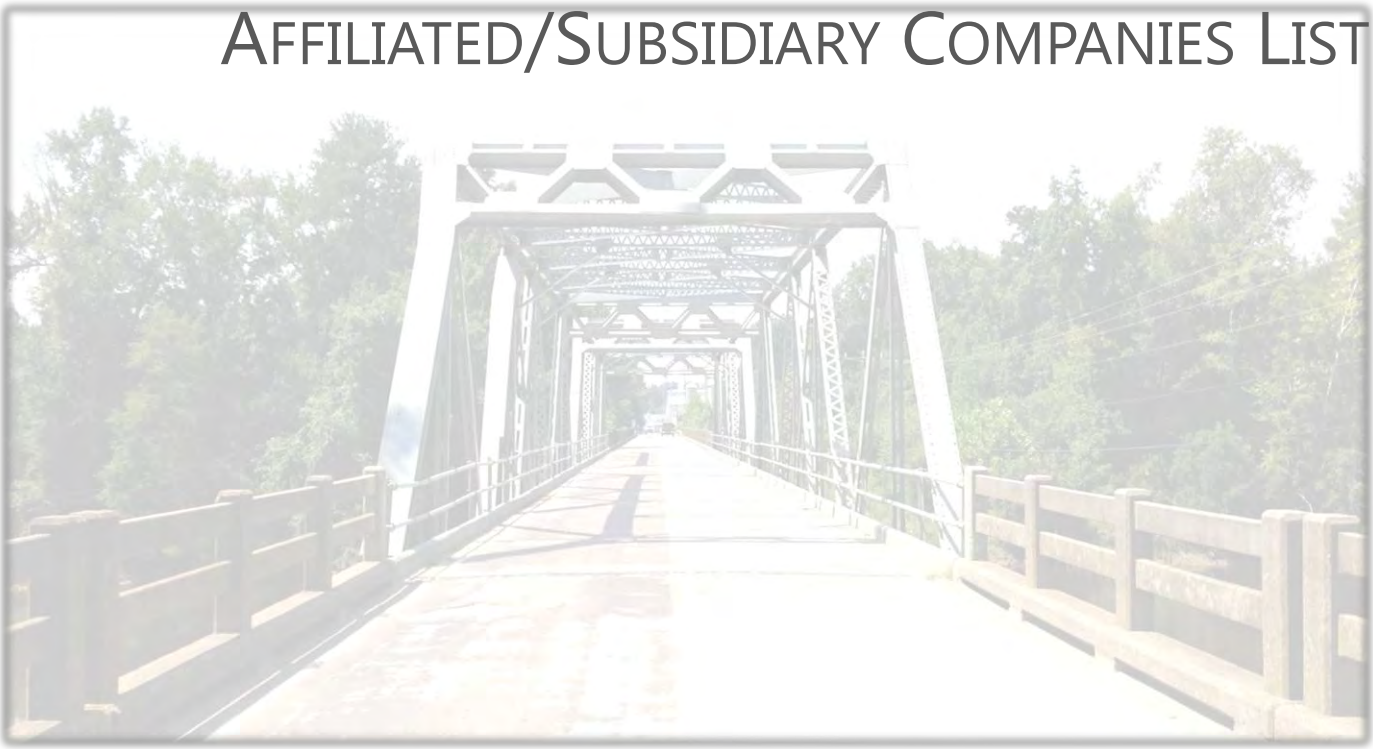

WAGMAN
BRIDGING GENERATIONS · SINCE 1902

ATTACHMENT 4.2.1

State Project No. 0035-087-112, PE-101, RW-201, C-501, B-604

Affiliated and Subsidiary Companies of the Offeror

Offerors shall complete the table and include the addresses of affiliates or subsidiary companies as applicable. By completing this table, Offerors certify that all affiliated and subsidiary companies of the Offeror are listed.

☐	**The Offeror does not have any affiliated or subsidiary companies.**
☒	**Affiliated and/ or subsidiary companies of the Offeror are listed below.**

Relationship with Offeror (Affiliate or Subsidiary)	Full Legal Name	Address
Affiliate	Wagman Construction, Inc.	231 North George Street, York, PA 17401
Affiliate (Parent)	Wagman Companies, Inc.	3290 North Susquehanna Trail, York, PA 17406

VDOT
Virginia Department of Transportation

Section 4.2.2
Debarment Forms
Attachment 4.2.2(a)
Attachment 4.2.2(b)

WAGMAN
Bridging Generations · Since 1902

Primary Debarment form

Attachment 4.2.2(A)

WAGMAN

Bridging Generations · Since 1902

ATTACHMENT 4.2.2(a)
CERTIFICATION REGARDING DEBARMENT
PRIMARY COVERED TRANSACTIONS

Project No.: 0035-087-112, PE-101, RW-201, C-501, B-604

1) The prospective primary participant certifies to the best of its knowledge and belief, that it and its principals:

a) Are not presently debarred, suspended, proposed for debarment, declared ineligible, or voluntarily excluded from covered transactions by any Federal department or agency.

b) Have not within a three-year period preceding this proposal been convicted of or had a civil judgment rendered against them for commission of fraud or a criminal offense in connection with obtaining, attempting to obtain, or performing a public (Federal, State or local) transaction or contract under a public transaction; and have not been convicted of any violations of Federal or State antitrust statutes or commission of embezzlement, theft, forgery, bribery, falsification, or destruction of records, making false statements, or receiving stolen property;

c) Are not presently indicted for or otherwise criminally or civilly charged by a governmental entity (Federal, State or local) with commission of any of the offenses enumerated in paragraph 1) b) of this certification; and

d) Have not within a three-year period preceding this application/proposal had one or more public transactions (Federal, State or local) terminated for cause or default.

2) Where the prospective primary participant is unable to certify to any of the statements in this certification, such prospective participant shall attach an explanation to this proposal.

The undersigned makes the foregoing statements to be filed with the proposal submitted on behalf of the Offeror for contracts to be let by the Commonwealth Transportation Board.

Todd E Beahm 9/5/2013 Senior V.P. of Operations
Signature Date Title

G.A. & F.C. Wagman, Inc.
Name of Firm

Lower tier Debarment form

Attachment 4.2.2(b)

WAGMAN

Bridging Generations · Since 1902

ATTACHMENT 4.2.2(b)
CERTIFICATION REGARDING DEBARMENT
LOWER TIER COVERED TRANSACTIONS

Project No.: 0035-087-112, PE-101, RW-201, C-501, B-604

1) The prospective lower tier participant certifies, by submission of this proposal, that neither it nor its principals is presently debarred, suspended, proposed for debarment, declared ineligible, or voluntarily excluded from participation in this transaction by any Federal department or agency.

2) Where the prospective lower tier participant is unable to certify to any of the statements in this certification, such prospective participant shall attach an explanation to this proposal.

The undersigned makes the foregoing statements to be filed with the proposal submitted on behalf of the Offeror for contracts to be let by the Commonwealth Transportation Board.

Robert Gallagher August 30, 2013 Senior Vice President

Signature Date Title

Johnson Mirmiran and Thompson, Inc.

Name of Firm

ATTACHMENT 4.2.2(b)
CERTIFICATION REGARDING DEBARMENT
LOWER TIER COVERED TRANSACTIONS

Project No.: 0035-087-112, PE-101, RW-201, C-501, B-604

1) The prospective lower tier participant certifies, by submission of this proposal, that neither it nor its principals is presently debarred, suspended, proposed for debarment, declared ineligible, or voluntarily excluded from participation in this transaction by any Federal department or agency.

2) Where the prospective lower tier participant is unable to certify to any of the statements in this certification, such prospective participant shall attach an explanation to this proposal.

The undersigned makes the foregoing statements to be filed with the proposal submitted on behalf of the Offeror for contracts to be let by the Commonwealth Transportation Board.

Elizabeth Quinn August 28, 2013 President
Signature Date Title

Quinn Consulting Services, Inc.
Name of Firm

ATTACHMENT 4.2.2(b)
CERTIFICATION REGARDING DEBARMENT
LOWER TIER COVERED TRANSACTIONS

Project No.: 0035-087-112, PE-101, RW-201, C-501, B-604

1) The prospective lower tier participant certifies, by submission of this proposal, that neither it nor its principals is presently debarred, suspended, proposed for debarment, declared ineligible, or voluntarily excluded from participation in this transaction by any Federal department or agency.

2) Where the prospective lower tier participant is unable to certify to any of the statements in this certification, such prospective participant shall attach an explanation to this proposal.

The undersigned makes the foregoing statements to be filed with the proposal submitted on behalf of the Offeror for contracts to be let by the Commonwealth Transportation Board.

J. Randy Wirt	August 23, 2013	VP/Director of Engineering
Signature	Date	Title

ECS Mid-Atlantic, LLC

Name of Firm

ATTACHMENT 4.2.2(b)
CERTIFICATION REGARDING DEBARMENT
LOWER TIER COVERED TRANSACTIONS

Project No.: 0035-087-112, PE-101, RW-201, C-501, B-604

1) The prospective lower tier participant certifies, by submission of this proposal, that neither it nor its principals is presently debarred, suspended, proposed for debarment, declared ineligible, or voluntarily excluded from participation in this transaction by any Federal department or agency.

2) Where the prospective lower tier participant is unable to certify to any of the statements in this certification, such prospective participant shall attach an explanation to this proposal.

The undersigned makes the foregoing statements to be filed with the proposal submitted on behalf of the Offeror for contracts to be let by the Commonwealth Transportation Board.

Sharon Ward Harbs August 19th, 2013 Vice President

Signature Date Title

EEE Consulting, Inc.

Name of Firm

ATTACHMENT 4.2.2(b)
CERTIFICATION REGARDING DEBARMENT
LOWER TIER COVERED TRANSACTIONS

Project No.: 0035-087-112, PE-101, RW-201, C-501, B-604

1) The prospective lower tier participant certifies, by submission of this proposal, that neither it nor its principals is presently debarred, suspended, proposed for debarment, declared ineligible, or voluntarily excluded from participation in this transaction by any Federal department or agency.

2) Where the prospective lower tier participant is unable to certify to any of the statements in this certification, such prospective participant shall attach an explanation to this proposal.

The undersigned makes the foregoing statements to be filed with the proposal submitted on behalf of the Offeror for contracts to be let by the Commonwealth Transportation Board.

Samuel Hassan 8/15/2013 President
Signature Date Title

Hassan Water Resources, PLC
Name of Firm

Virginia Department of Transportation

Section 4.2.3
VDOT Prequalification Certificate

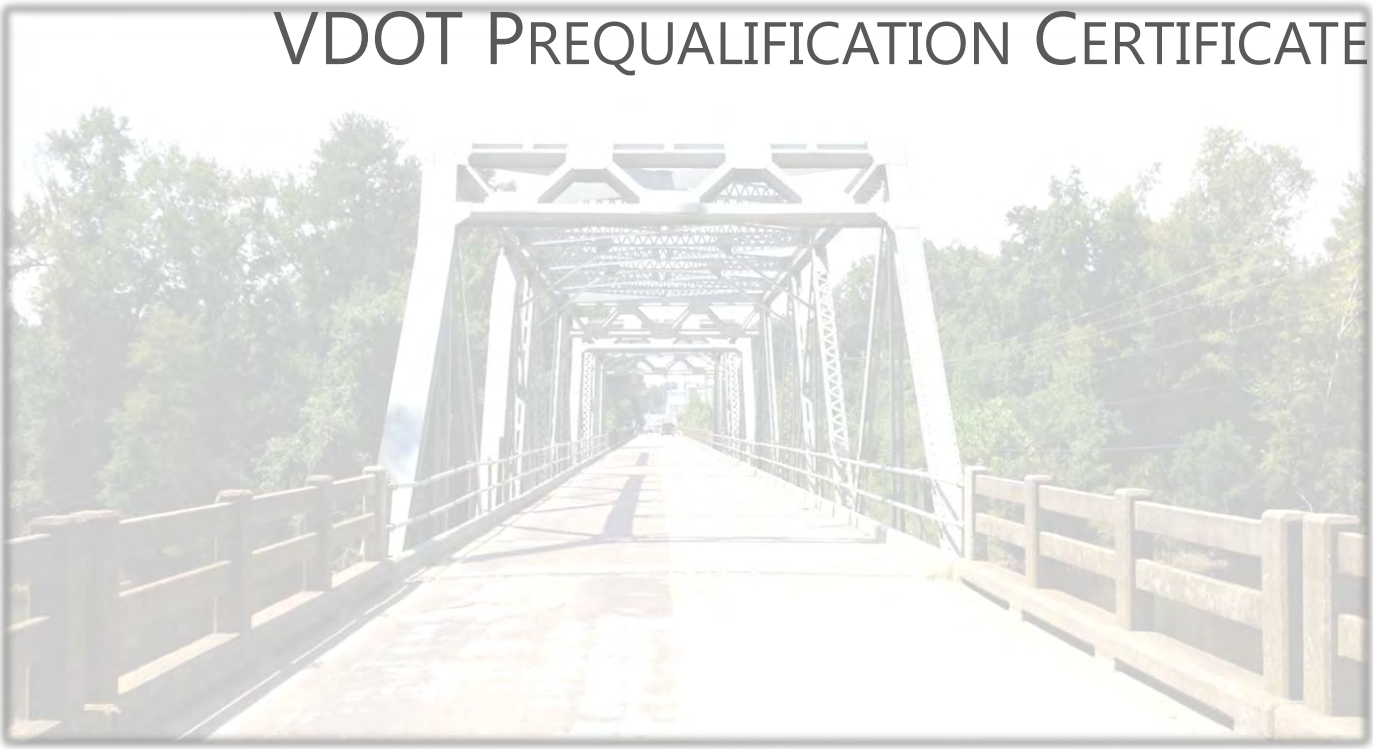

WAGMAN

Bridging Generations · Since 1902

COMMONWEALTH OF VIRGINIA

VDOT
Virginia Department of Transportation

CERTIFICATE OF QUALIFICATION

G. A. & F. C. WAGMAN, INC.

Vendor Number: **W002**

In accordance with the Regulations of the Virginia Department of Transportation, you are hereby notified that the following Rating and Classifications have been assigned to your firm:

PREQUALIFIED

Work Classes: MAJOR STRUCTURES; MINOR STRUCTURES; CLEARING AND GRUBBING; DEMOLITION OF STRUCTURES; EXCAVATING

Issue Date: 10/31/2012

This Rating and Classification will Expire: 10/31/2013

Suzanne FR Lucas, Prequalification Officer

Don E Silies, State Contract Officer

Prequalified Level

Your firm's prequalification documentation demonstrates that your firm has met or exceeded the minimum Prequalification Score of 80, the minimum Quality Score of 85, and the minimum Safety Score of 70. It has earned the "Prequalified" Level of Qualification. With this level of prequalification, your firm may bid on all projects up to your firm's bonding ability.

Expiration and renewal

Prequalification privileges are for a limited period of time. The **expiration** date is posted on your firm's listing on *"The Prequalified List"* on our webpage. New prequalification forms are due in the Prequalification Office the first day of the month prior to the Expiration month. Renewal expirations always fall on the last date of the expiration month.

Below are the set months of expiration for firms name *starting* with the letter or if the firm has a formal person's name, the first letter of the last name.

1.	**January**	*A*	2.	**February**	*B*
3.	**March**	*C*	4.	**April**	*D&E*
5.	**May**	*F, G,&H*	6.	**June**	*I, J, K,&L*
7.	**July**	*M, N,&O*	8.	**August**	*P, Q&R*
9.	**September**	*S*	10.	**October**	*T&Z*

New prequalification forms may be obtained at the following webpage: (Only the latest revision of the application will be accepted for renewal)

http://www.virginiadot.org/business/const/prequal.asp

Thanks for applying for Prequalification. Please send an email to the Prequalification Office if you have any further concerns regarding your firm's prequalification at:

Prequalification@VDOT.Virginia.gov

VDOT
Virginia Department of Transportation

Section 4.2.4
Surety Letter

WAGMAN
Bridging Generations · Since 1902

CNA SURETY

Three Radnor Corporate Center, 100 Matsonford Road, Suite 200, Radnor, PA 19087

July 23, 2013

Mr. Joseph Clark, P.E.
Virginia Department of Transportation
1401 East Broad Street, Annex Building, 8th Floor
Richmond, VA 23219

Re: Route 35 Bridge Replacement
Southampton County, Virginia
State Project No: (NFO) 0035-087-112, PE-101, RW-210, C-501, B0604
Federal Project No: BR-087-5(014)
Contract ID Number: C00081457DB57

Dear Mr. Clarke:

Please be advised a surety line of credit has been established and is in effect for G.A. & F.C. Wagman, Inc. with Western Surety Company, a CNA Surety Company located at Three Radnor Corporate Center, 100 Matson ford Road, Suite 200, Pennsylvania with an "A" rating by A.M. Best Company and a financial strength rating of "XV". This surety credit relations has existed since 1965

Western Surety Company is licensed and authorized to issue bonds in the Commonwealth of Virginia. The existing parameters of their surety credit program are $125,000,000 single project with an aggregate limit of $350,000,000. At the current time, there is adequate reserve available to bond this proposed project and any warranty periods as provided in the contract documents.

Western Surety Company has reviewed the RFP and would welcome the opportunity of underwriting performance and payment bonds for G.A. & F.C. Wagman, Inc. should they be selected as the contractor for this project. This commitment is contingent upon mutually acceptable contract terms, confirmation of financing for the total project and normal underwriting requirements of the surety at the time of contract award.

The surety agent for G.A. & F.C. Wagman, Inc. is Eugene M. Fritz, CPCU, Principal, American Insurance Administrators, Inc., 4550 Lena Drive, Mechanicsburg, PA 17055 (717) 591-8280. Their current power of attorney is attached.

If I can be of any further assistance or provide additional assurances for this highly valued client, please do not hesitate to call.

Respectfully submitted,

Eugene M. Fritz, CPCU
Attorney-In-Fact

Western Surety Company

POWER OF ATTORNEY APPOINTING INDIVIDUAL ATTORNEY-IN-FACT

Know All Men By These Presents, That WESTERN SURETY COMPANY, a South Dakota corporation, is a duly organized and existing corporation having its principal office in the City of Sioux Falls, and State of South Dakota, and that it does by virtue of the signature and seal herein affixed hereby make, constitute and appoint

James R Gould, Joseph G Buyakowski, Alson O Wolcott Jr, Eugene M Fritz, Patricia C Robinson, Kathy R Reisinger, Donald R Wert, Deborah L Cottom, Individually

of Mechanicsburg, PA, its true and lawful Attorney(s)-in-Fact with full power and authority hereby conferred to sign, seal and execute for and on its behalf bonds, undertakings and other obligatory instruments of similar nature

- In Unlimited Amounts -

and to bind it thereby as fully and to the same extent as if such instruments were signed by a duly authorized officer of the corporation and all the acts of said Attorney, pursuant to the authority hereby given, are hereby ratified and confirmed.

This Power of Attorney is made and executed pursuant to and by authority of the By-Law printed on the reverse hereof, duly adopted, as indicated, by the shareholders of the corporation.

In Witness Whereof, WESTERN SURETY COMPANY has caused these presents to be signed by its Vice President and its corporate seal to be hereto affixed on this 12th day of November, 2012.

WESTERN SURETY COMPANY

Paul T. Bruflat, Vice President

State of South Dakota
County of Minnehaha } ss

On this 12th day of November, 2012, before me personally came Paul T. Bruflat, to me known, who, being by me duly sworn, did depose and say: that he resides in the City of Sioux Falls, State of South Dakota; that he is the Vice President of WESTERN SURETY COMPANY described in and which executed the above instrument; that he knows the seal of said corporation; that the seal affixed to the said instrument is such corporate seal; that it was so affixed pursuant to authority given by the Board of Directors of said corporation and that he signed his name thereto pursuant to like authority, and acknowledges same to be the act and deed of said corporation.

My commission expires
June 23, 2015

J. MOHR
NOTARY PUBLIC
SOUTH DAKOTA

J. Mohr, Notary Public

CERTIFICATE

I, L. Nelson, Assistant Secretary of WESTERN SURETY COMPANY do hereby certify that the Power of Attorney hereinabove set forth is still in force, and further certify that the By-Law of the corporation printed on the reverse hereof is still in force. In testimony whereof I have hereunto subscribed my name and affixed the seal of the said corporation this 23rd day of July, 2013.

WESTERN SURETY COMPANY

L. Nelson, Assistant Secretary

Form F4280-7-2012

VDOT
Virginia Department of Transportation

SECTION 4.2.5
LICENSE & REGISTRATION INFORMATION

WAGMAN
BRIDGING GENERATIONS · SINCE 1902

ATTACHMENT 4.2.5

State Project No. 0035-087-112, PE-101, RW-201, C-501, B-604

SCC and DPOR Information - Businesses

Offerors shall complete the table and include the required state registration and licensure information. By completing this table, Offerors certify that their team complies with the requirements set forth in Section 4.2.5 and that all businesses listed are active and in good standing.

SCC & DPOR INFORMATION FOR BUSINESSES (RFP Sections 4.2.5.1 and 4.2.5.2)							
Business Name	SCC Information (4.2.5.1)			DPOR Information (4.2.5.2)			
	SCC Number	SCC Type of Corporation	SCC Status	DPOR Registered Address	DPOR Registration Type	DPOR Registration Number	DPOR Expiration Date
G.A. & F.C. Wagman, Inc.	F01989-8	Foreign	Active	3290 North Susquehanna Trail, York, PA 17406	Class A Contractor	2701015887	1/31/2015
Johnson Mirmiran and Thompson, Inc.	F149901-3	Corporation	Active	9201 Arboretum Pkwy Suite 310 Richmond, VA 23236	ENG, LS	0411 000029	02/28/14
Johnson Mirmiran and Thompson, Inc.	F149901-3	Corporation	Active	13921 Park Center Rd Herndon, VA 20171	ENG	0411 000441	02/28/14
Johnson Mirmiran and Thompson, Inc.	F149901-3	Corporation	Active	272 Bendix Rd Suite 260 Virginia Beach, VA 23452	ENG, LS	0411 000440	02/28/14
Johnson Mirmiran and Thompson, Inc.	F149901-3	Corporation	Active	72 Loveton Circle Sparks, MD 21152	ENG, LA, ARC, LS	0407 001314	12/31/13
Quinn Consulting Services, Inc.	0492551-7	S Corporation	Active	14160 Newbrook Dr., Suite 220 Chantilly, VA 20151	ENG	0407003733	12/31/13
ECS Mid-Atlantic, LLC	S120821-6	LLC	Active	2700 International Parkway , Suite 100 Virginia Beach, VA 23452	ENG	0411 000385	02/28/2014
EEE Consulting, Inc.	0504941-6	Corporation	Active	8525 Bell Creek Road Mechanicsville, VA 23116	ENG	0407 003798	12/31/2013
Hassan Water Resources, PLC	S229328-2	LLC	Active	2255 Parkers Hill Dr. Maidens, VA 23102-2244	ENG	0413 000299	12/31/2013

SCC Documentation

WAGMAN

Bridging Generations · Since 1902

Commonwealth of Virginia

State Corporation Commission

CERTIFICATE OF GOOD STANDING

I Certify the Following from the Records of the Commission:

That G. A. & F. C. WAGMAN, INC., a corporation incorporated under the law of Pennsylvania, is authorized to transact business in the Commonwealth of Virginia;

That it obtained a certificate of authority to transact business in Virginia from the Commission on September 20, 1967; and

That the corporation is in good standing in the Commonwealth of Virginia as of the date set forth below.

Nothing more is hereby certified.

Signed and Sealed at Richmond on this Date:

June 17, 2013

Joel H. Peck

Joel H. Peck, Clerk of the Commission

CISECOM
Document Control Number: 1306175437

Commonwealth of Virginia
State Corporation Commission

Virginia.gov

08/28/13
CISM0180 CORPORATE DATA INQUIRY 10:21:25

CORP ID: F019898 - 8 STATUS: 00 ACTIVE STATUS DATE: 10/08/10
CORP NAME: **WAGMAN, INC., G. A. & F. C.**

DATE OF CERTIFICATE: 09/20/1967 PERIOD OF DURATION: INDUSTRY CODE: 00
STATE OF INCORPORATION: PA PENNSYLVANIA STOCK INDICATOR: S STOCK
MERGER IND: CONVERSION/DOMESTICATION IND:
GOOD STANDING IND: Y MONITOR INDICATOR:
CHARTER FEE: 2500.00 MON NO: MON STATUS: MONITOR DTE:
R/A NAME: CORPORATION SERVICE COMPANY

STREET: BANK OF AMERICA CENTER AR RTN MAIL:
16TH FLOOR, 1111 EAST MAIN STREET
CITY: RICHMOND STATE : VA ZIP: 23219
R/A STATUS: 5 B.E. AUTH IN VI EFF. DATE: 09/11/12 LOC : 216
ACCEPTED AR#: 212 53 6903 DATE: 09/26/12 RICHMOND CITY
CURRENT AR#: 212 53 6903 DATE: 09/26/12 STATUS: A ASSESSMENT INDICATOR: 0

YEAR	FEES	PENALTY	INTEREST	TAXES	BALANCE	TOTAL SHARES
13	1,700.00				**1,700.00**	4,000,000

Commonwealth of Virginia

STATE CORPORATION COMMISSION

Richmond, February 8, 2002

This is to certify that a certificate of authority to transact business in Virginia was this day issued and admitted to record in this office for

Johnson, Mirmiran & Thompson, Inc.

a corporation organized under the laws of MARYLAND and that the said corporation is authorized to transact business in Virginia, subject to all Virginia laws applicable to the corporation and its business.

State Corporation Commission
Attest:

Joel H. Peck

Clerk of the Commission

CIS0436

Commonwealth of Virginia
State Corporation Commission

08/26/13
CISM0180 CORPORATE DATA INQUIRY 17:29:39

CORP ID: F149901 - 3 STATUS: 00 ACTIVE STATUS DATE: 10/17/06
CORP NAME: Johnson, Mirmiran & Thompson, Inc.

DATE OF CERTIFICATE: 10/17/2006 PERIOD OF DURATION: INDUSTRY CODE: 70
STATE OF INCORPORATION: MD MARYLAND STOCK INDICATOR: S STOCK
MERGER IND: CONVERSION/DOMESTICATION IND:
GOOD STANDING IND: Y MONITOR INDICATOR:
CHARTER FEE: 50.00 MON NO: MON STATUS: MONITOR DTE:
R/A NAME: ROBERT GALLAGHER

STREET: 9201 ARBORETUM PKY STE 140 AR RTN MAIL:

CITY: RICHMOND STATE : VA ZIP: 23236
R/A STATUS: 2 OFFICER EFF. DATE: 09/06/07 LOC : 120
ACCEPTED AR#: 213 53 7683 DATE: 08/13/13 CHESTERFIELD CO
CURRENT AR#: 213 53 7683 DATE: 08/13/13 STATUS: A ASSESSMENT INDICATOR: 0

YEAR	FEES	PENALTY	INTEREST	TAXES	BALANCE	TOTAL SHARES
13	100.00					1,000

(Screen Id:/Corp_Data_Inquiry)

Commonwealth of Virginia

State Corporation Commission

CERTIFICATE OF GOOD STANDING

I Certify the Following from the Records of the Commission:

That QUINN CONSULTING SERVICES INCORPORATED is duly incorporated under the law of the Commonwealth of Virginia;

That the date of its incorporation is October 24, 1997;

That the period of its duration is perpetual; and

That the corporation is in existence and in good standing in the Commonwealth of Virginia as of the date set forth below.

Nothing more is hereby certified.

Signed and Sealed at Richmond on this Date:
August 15, 2011

Joel H. Peck

Joel H. Peck, Clerk of the Commission

CIS0502

SCC
Conta
Si

Commonwealth of Virginia
State Corporation Commission

Virgin

08/22/13

CISM0180 CORPORATE DATA INQUIRY 14:01:39

CORP ID: 0492551 - 7 STATUS: 00 ACTIVE STATUS DATE: 12/01/08
CORP NAME: QUINN CONSULTING SERVICES INCORPORATED

DATE OF CERTIFICATE: 10/24/1997 PERIOD OF DURATION: INDUSTRY CODE: 00
STATE OF INCORPORATION: VA VIRGINIA STOCK INDICATOR: S STOCK
MERGER IND: S SURVIVOR CONVERSION/DOMESTICATION IND:
GOOD STANDING IND: Y MONITOR INDICATOR:
CHARTER FEE: 50.00 MON NO: MON STATUS: MONITOR DTE:
R/A NAME: JOHN H QUINN JR

STREET: 2208 S KNOLL ST AR RTN MAIL:

CITY: ARLINGTON STATE : VA ZIP: 22202 2134
R/A STATUS: 4 ATTORNEY EFF. DATE: 10/24/97 LOC : 106
ACCEPTED AR#: 212 14 5571 DATE: 09/11/12 ARLINGTON COUNT
CURRENT AR#: 212 14 5571 DATE: 09/11/12 STATUS: A ASSESSMENT INDICATOR: 0

YEAR	FEES	PENALTY	INTEREST	TAXES	BALANCE	TOTAL SHARES
13	100.00				**100.00**	5,000

(Screen Id:/Corp_Data_Inquiry)

Commonwealth of Virginia

STATE CORPORATION COMMISSION

Richmond, April 16, 2004

This is to certify that the certificate of organization of

Engineering Consulting Services - Mid-Atlantic, LLC

was this day issued and admitted to record in this office and that the said limited liability company is authorized to transact its business subject to all Virginia laws applicable to the company and its business. Effective date: April 16, 2004

State Corporation Commission
Attest:

Joel H. Peck
Clerk of the Commission

CIS0431

COMMONWEALTH OF VIRGINIA
STATE CORPORATION COMMISSION

AT RICHMOND, AUGUST 5, 2004

The State Corporation Commission has found the accompanying articles submitted on behalf of

ECS - Mid-Atlantic, LLC
(formerly known as Engineering Consulting Services - Mid-Atlantic, LLC)

to comply with the requirements of law, and confirms payment of all required fees. Therefore, it is ORDERED that this

CERTIFICATE OF AMENDMENT

be issued and admitted to record with the articles of amendment in the Office of the Clerk of the Commission, effective August 5, 2004.

STATE CORPORATION COMMISSION

By Mark L. Christie

Commissioner

04-07-21-4045
LLAACPT
CIS0436

Commonwealth of Virginia
State Corporation Commission

08/26/13
LLCM3220 LLC DATA INQUIRY 17:31:10

LLC ID: S120821 - 6 STATUS: 00 ACTIVE STATUS DATE: 04/16/04
LLC NAME: ECS - Mid-Atlantic, LLC

DATE OF FILING: 04/16/2004 PERIOD OF DURATION: INDUSTRY CODE: 00
STATE OF FILING: VA VIRGINIA MERGER INDICATOR:
CONVERSION/DOMESTICATION INDICATOR:

P R I N C I P A L O F F I C E A D D R E S S

STREET: 14026 THUNDERBOLT PL STE 100

CITY: CHANTILLY STATE: VA ZIP: 20151-0000

R E G I S T E R E D A G E N T I N F O R M A T I O N

R/A NAME: JAMES A ECKERT

STREET: 14026 THUNDERBOLT PL STE 100

RTN MAIL:

CITY: CHANTILLY STATE: VA ZIP: 20151-0000
R/A STATUS: 2 O/D OF CORP M/M EFF DATE: 04/16/04 LOC: 129 FAIRFAX COUNTY

YEAR	FEES	PENALTY	INTEREST	BALANCE
13	50.00			

(Screen Id:/LLC_Data_Inquiry)

Commonwealth of Virginia

STATE CORPORATION COMMISSION

Richmond, June 23, 1998

This is to Certify that the certificate of incorporation of

EEE Consulting, Inc.

was this day issued and admitted to record in this office and that the said corporation is authorized to transact its business subject to all Virginia laws applicable to the corporation and its business. Effective date:

June 23, 1998

State Corporation Commission

William J. Bridge

Clerk of the Commission

Commonwealth of Virginia
State Corporation Commission

08/26/13
CISM0180 CORPORATE DATA INQUIRY 18:05:41

CORP ID: 0504941 - 6 STATUS: 00 ACTIVE STATUS DATE: 08/04/04
CORP NAME: EEE CONSULTING, INC.

DATE OF CERTIFICATE: 06/23/1998 PERIOD OF DURATION: INDUSTRY CODE: 00
STATE OF INCORPORATION: VA VIRGINIA STOCK INDICATOR: S STOCK
MERGER IND: CONVERSION/DOMESTICATION IND:
GOOD STANDING IND: Y MONITOR INDICATOR:
CHARTER FEE: 700.00 MON NO: MON STATUS: MONITOR DTE:
R/A NAME: CT CORPORATION SYSTEM

STREET: 4701 COX RD STE 301 AR RTN MAIL:

CITY: GLEN ALLEN STATE : VA ZIP: 23060
R/A STATUS: 5 B.E. AUTH IN VI EFF. DATE: 05/15/12 LOC : 143
ACCEPTED AR#: 213 52 4464 DATE: 05/24/13 HENRICO COUNTY
CURRENT AR#: 213 52 4464 DATE: 05/24/13 STATUS: A ASSESSMENT INDICATOR: 0

YEAR	FEES	PENALTY	INTEREST	TAXES	BALANCE	TOTAL SHARES
13	100.00					333,000

(Screen Id:/Corp_Data_Inquiry)

Commonwealth of Virginia

STATE CORPORATION COMMISSION

Richmond, July 16, 2007

This is to certify that the certificate of organization of

Hassan Water Resources, PLC

was this day issued and admitted to record in this office and that the said limited liability company is authorized to transact its business subject to all Virginia laws applicable to the company and its business. Effective date: July 16, 2007

State Corporation Commission
Attest:

Joel H. Peck
Clerk of the Commission

CIS0345

Commonwealth of Virginia
State Corporation Commission

08/26/13
17:30:47

LLCM3220 LLC DATA INQUIRY

LLC ID: S229328 - 2 STATUS: 00 ACTIVE STATUS DATE: 07/16/07

LLC NAME: Hassan Water Resources, PLC

DATE OF FILING: 07/16/2007 PERIOD OF DURATION: INDUSTRY CODE: 70

STATE OF FILING: VA VIRGINIA MERGER INDICATOR:

CONVERSION/DOMESTICATION INDICATOR:

PRINCIPAL OFFICE ADDRESS

STREET: 2255 PARKERS HILL DR

CITY: MAIDENS STATE: VA ZIP: 23102-0000

REGISTERED AGENT INFORMATION

R/A NAME: GAMAL E HASSAN

STREET: 2255 PARKERS HILL DR

RTN MAIL:

CITY: MAIDENS STATE: VA ZIP: 23102-0000

R/A STATUS: 1 MEMBER/MANAGER EFF DATE: 05/04/10 LOC: 137 GOOCHLAND COUNT

YEAR	FEES	PENALTY	INTEREST	BALANCE
13	50.00			

(Screen Id:/LLC_Data_Inquiry)

DPOR Documentation

WAGMAN

Bridging Generations · Since 1902

DEPARTMENT OF PROFESSIONAL AND OCCUPATIONAL REGULATION
COMMONWEALTH OF VIRGINIA

9960 Mayland Dr., Suite 400, Richmond, VA 23233
Telephone: (804) 367-8500

EXPIRES ON
01-31-2015

NUMBER
2701015887

BOARD FOR CONTRACTORS
CLASS A CONTRACTOR
CLASSIFICATIONS H/H

GA & FC WAGMAN INC
3290 NORTH SUSQUEHANNA TRAIL
YORK, PA 17406-9754

Gordon N. Dixon, Director

ALTERATION OF THIS DOCUMENT, USE AFTER EXPIRATION, OR USE BY PERSONS OR FIRMS OTHER THAN THOSE NAMED MAY RESULT IN CRIMINAL PROSECUTION UNDER THE CODE OF VIRGINIA.

(SEE REVERSE SIDE FOR NAME AND/OR ADDRESS CHANGE)

(POCKET CARD)

COMMONWEALTH OF VIRGINIA
CLASS A BOARD FOR CONTRACTORS
CONTRACTOR

CLASSIFICATIONS H/H
NUMBER: 2701015887 EXPIRES: 01-31-2015

GA & FC WAGMAN INC
3290 NORTH SUSQUEHANNA TRAIL
YORK, PA 17406-9754

(FOLD)

(DETACH HERE)

DEPARTMENT OF PROFESSIONAL AND OCCUPATIONAL REGULATION
9960 Mayland Dr., Suite 400, Richmond, VA 23233

ALTERATION OF THIS DOCUMENT, USE AFTER EXPIRATION, OR USE BY PERSONS OR FIRMS OTHER THAN THOSE NAMED MAY RESULT IN CRIMINAL PROSECUTION UNDER THE CODE OF VIRGINIA.

Skip to Content (#skipPoint)
Skip to Content (#skipPoint)
(http://www.virginia.gov/)
Online Services (http://portal.virginia.gov/online/) | Agencies (http://portal.virginia.gov/commonwealth_website_directory/) | Governor (http://www.governor.virginia.gov) | Help (http://portal.virginia.gov/contact/)
Search Virginia.Gov (http://portal.virginia.gov/SearchResults/)

(/applicants)

(/licensees)

(/consumers) Enter Keyword Search

Home (/) > License Lookup (/LicenseLookup/) > License Lookup & Disciplinary Actions

Details of license number 2701015887

Name:	GA & FC WAGMAN INC	print
License Number:	2701015887	
License Description:		
Class Definitions (http://lis.virginia.gov/cgi-bin/legp604.exe?000+cod+54.1-1100)	Contractor Class A	
Business Type:	Corporation	
Address:	3290 NORTH SUSQUEHANNA TRAIL YORK, PA 17406	
Specialties/Classifications:		
Classification Definitions (http://lis.virginia.gov/cgi-bin/legp604.exe?000+reg+18VAC50-22-20)	Highway / Heavy (H/H)	
Specialty Definitions (http://lis.virginia.gov/cgi-bin/legp604.exe?000+reg+18VAC50-22-30)		
Initial Certification Date:	1976-10-29	
Expiration Date:	2015-01-31	

No Open Complaints

"Open Complaints" reflect only those complaints against regulants for which a departmental investigation has determined that sufficient evidence exists to establish probable cause of a violation of the law or regulations. Only those cases that have proceeded through an investigation to the adjudication stage are displayed. **State law prohibits the disclosure of any information about open complaints** [Code of Virginia Section 54.1-108]. (http://leg1.state.va.us/cgi-bin/legp504.exe?000+cod+54.1-108) Members of the public may review official records and obtain copies only after a complaint investigation is closed.

No Closed Complaints

"Closed Complaints" reflect complaints against regulants closed since 1990. Cases closed without disciplinary action are purged after three years in accordance with DPOR's record retention policy.

To inquire about closed complaints, see the department's Public Records Access (http://www.dpor.virginia.gov/recordsanddocuments/) or contact the department's

WAI Level Compliant (http://www.w3.org/WAI/WCAG1A-Conformance) | Web Policy (/WebPolicy/)
Copyright © 2000-2012 Virginia Department of Professional and Occupational Regulation

License Lookup (/LicenseLookup/)

Online Renewal & Services (/OnlineServices/)

Boards (/Boards/)

Professions & Occupations (/ProfessionsAndOccupations/)

Forms & Applications (/FormsAndApplications/)

Fair Housing Office (/FairHousing/)

Community Associations (/CIC-Ombudsman/)

Report a Licensee (/Report-Licensee/)

Records & Documents (/RecordsandDocuments/)

News & Information (/News/)

About DPOR (/About/)

Contact (/Contact/)

Join us on Facebook (http://www.facebook.com/VirginiaDPOR)

DEPARTMENT OF PROFESSIONAL AND OCCUPATIONAL REGULATION
COMMONWEALTH OF VIRGINIA

EXPIRES ON
02-28-2014

9960 Mayland Dr., Suite 400, Richmond, VA 23233
Telephone: (804) 367-8500

NUMBER
0411000029

BOARD FOR ARCHITECTS, PROFESSIONAL ENGINEERS, LAND SURVEYORS, CERTIFIED INTERIOR DESIGNERS AND LANDSCAPE ARCHITECTS
BUSINESS ENTITY BRANCH OFFICE REGISTRATION

PROFESSIONS: ENG, LS

JOHNSON, MIRMIRAN & THOMPSON, INC.
9201 ARBORETUM PKWY
SUITE 310
RICHMOND, VA 23236

Gordon N. Dixon, Director

ALTERATION OF THIS DOCUMENT, USE AFTER EXPIRATION, OR USE BY PERSONS OR FIRMS OTHER THAN THOSE NAMED MAY RESULT IN CRIMINAL PROSECUTION UNDER THE CODE OF VIRGINIA.

(SEE REVERSE SIDE FOR NAME AND/OR ADDRESS CHANGE)

(POCKET CARD)

COMMONWEALTH OF VIRGINIA
BOARD FOR APELSCIDLA
BUSINESS ENTITY BRANCH OFFICE REGISTRATION
NUMBER: 0411000029 EXPIRES: 02-28-2014
PROFESSIONS: ENG, LS
JOHNSON, MIRMIRAN & THOMPSON, INC.
9201 ARBORETUM PKWY
SUITE 310
RICHMOND, VA 23236

(FOLD)

(DETACH HERE)

DEPARTMENT OF PROFESSIONAL AND OCCUPATIONAL REGULATION
9960 Mayland Dr., Suite 400, Richmond, VA 23233

ALTERATION OF THIS DOCUMENT, USE AFTER EXPIRATION, OR USE BY PERSONS OR FIRMS OTHER THAN THOSE NAMED MAY RESULT IN CRIMINAL PROSECUTION UNDER THE CODE OF VIRGINIA.

License Lookup
Online Renewal & Services
Boards
Professions & Occupations
Forms & Applications
Fair Housing Office
Community Associations
Report a Licensee
Records & Documents
News & Information
About DPOR
Contact

Join us on Facebook

Details of license number 0411000029

print

Name:	JOHNSON MIRMIRAN & THOMPSON INC.
License Number:	0411000029
License Description:	Business Entity Branch Office Registration
Business Name	JOHNSON MIRMIRAN & THOMPSON INC.
Business Type:	CORP
Address:	9201 ARBORETUM PKWY SUITE 310 RICHMOND, VA 23236
Initial Certification Date:	1992-03-24
Expiration Date:	2014-02-28

Filter:

Related Licenses

License Number	License Holder Name	License Type	License Expiry
0402023016	GALLAGHER, ROBERT TAYLOR	Professional Engineer License	2014-01-31
0403002078	ZMUDA, MICHAEL WILLIAM	Land Surveyor License	2013-12-31

Showing 1 to 2 of 2 entries

First Previous 1 Next Last

No Open Complaints

"Open Complaints" reflect only those complaints against regulants for which a departmental investigation has determined that sufficient evidence exists to establish probable cause of a violation of the law or regulations. Only those cases that have proceeded through an investigation to the adjudication stage are displayed. **State law prohibits the disclosure of any information about open complaints** [Code of Virginia Section 54.1-108]. Members of the public may review official records and obtain copies only after a complaint investigation is closed.

No Closed Complaints

"Closed Complaints" reflect complaints against regulants closed since 1990. Cases closed without disciplinary action are purged after three years in accordance with DPOR's record retention policy.

To inquire about closed complaints, see the department's Public Records Access or contact the department's Information Management Section at (804) 367-8583 or publicrecords@dpor.virginia.gov.

The information on this page was last updated on 2013-08-25.

DEPARTMENT OF PROFESSIONAL AND OCCUPATIONAL REGULATION
COMMONWEALTH OF VIRGINIA

EXPIRES ON
02-28-2014

9960 Mayland Dr., Suite 400, Richmond, VA 23233
Telephone: (804) 367-8500

NUMBER
0411000440

BOARD FOR ARCHITECTS, PROFESSIONAL ENGINEERS, LAND SURVEYORS, CERTIFIED INTERIOR DESIGNERS AND LANDSCAPE ARCHITECTS
BUSINESS ENTITY BRANCH OFFICE REGISTRATION

PROFESSIONS: LS, ENG

JOHNSON MIRMIRAN & THOMPSON INC
272 BENDIX ROAD
SUITE 260
VIRGINIA BEACH, VA 23452

Gordon N. Dixon, Director

ALTERATION OF THIS DOCUMENT, USE AFTER EXPIRATION, OR USE BY PERSONS OR FIRMS OTHER THAN THOSE NAMED MAY RESULT IN CRIMINAL PROSECUTION UNDER THE CODE OF VIRGINIA.

(SEE REVERSE SIDE FOR NAME AND/OR ADDRESS CHANGE)

(POCKET CARD)

COMMONWEALTH OF VIRGINIA
BOARD FOR APELSCIDLA
BUSINESS ENTITY BRANCH OFFICE REGISTRATION
NUMBER: 0411000440 EXPIRES: 02-28-2014
PROFESSIONS: LS, ENG
JOHNSON MIRMIRAN & THOMPSON INC
272 BENDIX ROAD
SUITE 260
VIRGINIA BEACH, VA 23452

(FOLD)

(DETACH HERE)

DEPARTMENT OF PROFESSIONAL AND OCCUPATIONAL REGULATION
9960 Mayland Dr., Suite 400, Richmond, VA 23233

ALTERATION OF THIS DOCUMENT, USE AFTER EXPIRATION, OR USE BY PERSONS OR FIRMS OTHER THAN THOSE NAMED MAY RESULT IN CRIMINAL PROSECUTION UNDER THE CODE OF VIRGINIA.

Details of license number 0411000440

print

Name:	JOHNSON MIRMIRAN & THOMPSON INC
License Number:	0411000440
License Description:	Business Entity Branch Office Registration
Business Name	JOHNSON MIRMIRAN & THOMPSON INC
Address:	272 BENDIX ROAD SUITE 260 VIRGINIA BEACH, VA 23452
Initial Certification Date:	2006-03-06
Expiration Date:	2014-02-28

Filter:

Related Licenses

License Number	License Holder Name	License Type	License Expiry
0402018688	TAYLOR, CHRISTOPHER ARMAND	Professional Engineer License	2014-07-31
0402019314	CAMPBELL, GARY DALE	Professional Engineer License	2015-02-28
0402021268	MOORE, WALTER MERRITT	Professional Engineer License	2014-07-31
0402031186	FOWLER, JOHN DUSTIN	Professional Engineer License	2014-02-28
0403001728	HASKETT, MARK ANTHONY	Land Surveyor License	2014-01-31
0403002234	STICKLES, CHARLES BRIAN	Land Surveyor License	2014-06-30

Showing 1 to 6 of 6 entries

First Previous 1 Next Last

No Open Complaints

"Open Complaints" reflect only those complaints against regulants for which a departmental investigation has determined that sufficient evidence exists to establish probable cause of a violation of the law or regulations. Only those cases that have proceeded through an investigation to the adjudication stage are displayed. State law **prohibits the disclosure of any information about open complaints** [Code of Virginia Section 54.1-108]. Members of the public may review official records and obtain copies only after a complaint investigation is closed.

No Closed Complaints

"Closed Complaints" reflect complaints against regulants closed since 1990. Cases closed without disciplinary action are purged after three years in accordance with DPOR's record retention policy.

To inquire about closed complaints, see the department's Public Records Access or contact the department's Information Management Section at (804) 367-8583 or publicrecords@dpor.virginia.gov.

DEPARTMENT OF PROFESSIONAL AND OCCUPATIONAL REGULATION
COMMONWEALTH OF VIRGINIA

EXPIRES ON
12-31-2013

9960 Mayland Dr., Suite 400, Richmond, VA 23233
Telephone: (804) 367-8500

NUMBER
0407001314

BOARD FOR ARCHITECTS, PROFESSIONAL ENGINEERS, LAND SURVEYORS, CERTIFIED INTERIOR DESIGNERS AND LANDSCAPE ARCHITECTS
BUSINESS ENTITY REGISTRATION

PROFESSIONS: ENG, LA, ARC, LS

JOHNSON MIRMIRAN & THOMPSON INC
72 LOVETON CIRCLE
SPARKS, MD 21152

Gordon N. Dixon, Director

ALTERATION OF THIS DOCUMENT, USE AFTER EXPIRATION, OR USE BY PERSONS OR FIRMS OTHER THAN THOSE NAMED MAY RESULT IN CRIMINAL PROSECUTION UNDER THE CODE OF VIRGINIA.

(SEE REVERSE SIDE FOR NAME AND/OR ADDRESS CHANGE)

(POCKET CARD)

COMMONWEALTH OF VIRGINIA

BOARD FOR APELSCIDLA
BUSINESS ENTITY REGISTRATION
NUMBER: 0407001314 EXPIRES: 12-31-2013
PROFESSIONS: ENG, LA, ARC, LS
JOHNSON MIRMIRAN & THOMPSON INC
72 LOVETON CIRCLE
SPARKS, MD 21152

(FOLD)

(DETACH HERE)

DEPARTMENT OF PROFESSIONAL AND OCCUPATIONAL REGULATION
9960 Mayland Dr., Suite 400, Richmond, VA 23233

ALTERATION OF THIS DOCUMENT, USE AFTER EXPIRATION, OR USE BY PERSONS OR FIRMS OTHER THAN THOSE NAMED MAY RESULT IN CRIMINAL PROSECUTION UNDER THE CODE OF VIRGINIA.

Details of license number 0407001314

print

Name:	JOHNSON MIRMIRAN & THOMPSON INC
License Number:	0407001314
License Description:	Business Entity Registration
Address:	72 LOVETON CIRCLE SPARKS, MD 21152
Initial Certification Date:	1982-08-30
Expiration Date:	2013-12-31

Filter:

Related Licenses

License Number	License Holder Name	License Type	License Expiry
0401014925	MILLER, BARRY ALAN	Architect License	2015-07-31
0402006350	MIRMIRAN, F F	Professional Engineer License	2014-09-30
0402011046	BECKETT, T H	Professional Engineer License	2014-12-31
0402011047	BERINGER, R M	Professional Engineer License	2015-03-31
0402020282	CHENG, DANIEL T	Professional Engineer License	2013-09-30
0402023730	CLEMENT, PAUL FRANKLIN	Professional Engineer License	2014-12-31
0402023760	WOLNIAK, MATTHEW J	Professional Engineer License	2014-12-31
0402032610	SMITH, JAMES WALTER	Professional Engineer License	2014-06-30
0403003034	STICKLES, DAVID KEITH	Land Surveyor License	2013-12-31
0406001444	CONNER, JON SCOTT	Landscape Architect License	2013-12-31

Showing 1 to 10 of 10 entries

First Previous 1 Next Last

No Open Complaints

"Open Complaints" reflect only those complaints against regulants for which a departmental investigation has determined that sufficient evidence exists to establish probable cause of a violation of the law or regulations. Only those cases that have proceeded through an investigation to the adjudication stage are displayed. **State law prohibits the disclosure of any information about open complaints** [Code of Virginia Section 54.1-108]. Members of the public may review official records and obtain copies only after a complaint investigation is closed.

No Closed Complaints

"Closed Complaints" reflect complaints against regulants closed since 1990. Cases closed without disciplinary action are purged after three years in accordance with DPOR's record

DEPARTMENT OF PROFESSIONAL AND OCCUPATIONAL REGULATION
COMMONWEALTH OF VIRGINIA

9960 Mayland Dr., Suite 400, Richmond, VA 23233
Telephone: (804) 367-8500

EXPIRES ON
02-28-2014

NUMBER
0411000441

BOARD FOR ARCHITECTS, PROFESSIONAL ENGINEERS, LAND SURVEYORS, CERTIFIED INTERIOR DESIGNERS AND LANDSCAPE ARCHITECTS
BUSINESS ENTITY BRANCH OFFICE REGISTRATION

PROFESSIONS: ENG

JOHNSON MIRMIRAN & THOMPSON INC
13921 PARK CENTER RD
HERNDON, VA 20171

ALTERATION OF THIS DOCUMENT, USE AFTER EXPIRATION, OR USE BY PERSONS OR FIRMS OTHER THAN THOSE NAMED MAY RESULT IN CRIMINAL PROSECUTION UNDER THE CODE OF VIRGINIA.

Gordon N. Dixon, Director

(SEE REVERSE SIDE FOR NAME AND/OR ADDRESS CHANGE)

(POCKET CARD)

COMMONWEALTH OF VIRGINIA

BOARD FOR APELSCIDLA
BUSINESS ENTITY BRANCH OFFICE REGISTRATION
NUMBER: 0411000441 EXPIRES: 02-28-2014
PROFESSIONS: ENG
JOHNSON MIRMIRAN & THOMPSON INC
13921 PARK CENTER RD
HERNDON, VA 20171

(FOLD)

(DETACH HERE)

DEPARTMENT OF PROFESSIONAL AND OCCUPATIONAL REGULATION
9960 Mayland Dr., Suite 400, Richmond, VA 23233

ALTERATION OF THIS DOCUMENT, USE AFTER EXPIRATION, OR USE BY PERSONS OR FIRMS OTHER THAN THOSE NAMED MAY RESULT IN CRIMINAL PROSECUTION UNDER THE CODE OF VIRGINIA.

License Lookup
Online Renewal & Services
Boards
Professions & Occupations
Forms & Applications
Fair Housing Office
Community Associations
Report a Licensee
Records & Documents
News & Information
About DPOR
Contact

Join us on Facebook

Details of license number 0411000441

print

Name:	JOHNSON MIRMIRAN & THOMPSON INC
License Number:	0411000441
License Description:	Business Entity Branch Office Registration
Business Name	JOHNSON MIRMIRAN & THOMPSON INC
Address:	13921 PARK CENTER RD HERNDON, VA 20171
Initial Certification Date:	2006-03-06
Expiration Date:	2014-02-28

Filter:

Related Licenses

License Number	License Holder Name	License Type	License Expiry
0402030511	BOICE, RANDY LAWRENCE	Professional Engineer License	2014-12-31
0402038265	KELLEHER, TIMOTHY JOHN	Professional Engineer License	2014-12-31
0403003184	WILLIAMS, SCOTT LINDSLEY	Land Surveyor License	2013-12-31

Showing 1 to 3 of 3 entries

First Previous 1 Next Last

No Open Complaints

"Open Complaints" reflect only those complaints against regulants for which a departmental investigation has determined that sufficient evidence exists to establish probable cause of a violation of the law or regulations. Only those cases that have proceeded through an investigation to the adjudication stage are displayed. **State law prohibits the disclosure of any information about open complaints** [Code of Virginia Section 54.1-108]. Members of the public may review official records and obtain copies only after a complaint investigation is closed.

No Closed Complaints

"Closed Complaints" reflect complaints against regulants closed since 1990. Cases closed without disciplinary action are purged after three years in accordance with DPOR's record retention policy.

To inquire about closed complaints, see the department's Public Records Access or contact the department's Information Management Section at (804) 367-8583 or publicrecords@dpor.virginia.gov.

The information on this page was last updated on 2013-08-25.

DEPARTMENT OF PROFESSIONAL AND OCCUPATIONAL REGULATION
COMMONWEALTH OF VIRGINIA

9960 Mayland Dr., Suite 400, Richmond, VA 23233
Telephone: (804) 367-8500

EXPIRES ON
12-31-2013

NUMBER
0407003733

BOARD FOR ARCHITECTS, PROFESSIONAL ENGINEERS, LAND SURVEYORS, CERTIFIED INTERIOR DESIGNERS AND LANDSCAPE ARCHITECTS
BUSINESS ENTITY REGISTRATION

PROFESSIONS: ENG

QUINN CONSULTING SERVICES INC
14160 NEWBROOK DR
SUITE 220
CHANTILLY, VA 20151

ALTERATION OF THIS DOCUMENT, USE AFTER EXPIRATION, OR USE BY PERSONS OR FIRMS OTHER THAN THOSE NAMED MAY RESULT IN CRIMINAL PROSECUTION UNDER THE CODE OF VIRGINIA.

Gordon N. Dixon, Director

(SEE REVERSE SIDE FOR NAME AND/OR ADDRESS CHANGE)

(POCKET CARD)

COMMONWEALTH OF VIRGINIA

BOARD FOR APELSCIDLA
BUSINESS ENTITY REGISTRATION
NUMBER: 0407003733 EXPIRES: 12-31-2013
PROFESSIONS: ENG
QUINN CONSULTING SERVICES INC
14160 NEWBROOK DR
SUITE 220
CHANTILLY, VA 20151

(FOLD)

(DETACH HERE)

DEPARTMENT OF PROFESSIONAL AND OCCUPATIONAL REGULATION
9960 Mayland Dr., Suite 400, Richmond, VA 23233

NOV 13 2012

ALTERATION OF THIS DOCUMENT, USE AFTER EXPIRATION, OR USE BY PERSONS OR FIRMS OTHER THAN THOSE NAMED MAY RESULT IN CRIMINAL PROSECUTION UNDER THE CODE OF VIRGINIA.

10010 (7/11) 107028-3

Details of license number 0407003733

print

Name:	QUINN CONSULTING SERVICES INC
License Number:	0407003733
License Description:	Business Entity Registration
Address:	14160 NEWBROOK DR SUITE 220 CHANTILLY, VA 20151
Initial Certification Date:	1998-03-05
Expiration Date:	2013-12-31

Filter:

Related Licenses

License Number	License Holder Name	License Type	License Expiry
0402026380 (licenseDetail.cfm?lrn=0402026380)	VICINSKI, JOHN KEVIN	Professional Engineer License	2015-08-31
0402039004 (licenseDetail.cfm?lrn=0402039004)	VYAS, KAUSHIKKUMAR BHUPENDRAPRASAD	Professional Engineer License	2014-06-30

Showing 1 to 2 of 2 entries

First Previous 1 Next Last

No Open Complaints

"Open Complaints" reflect only those complaints against regulants for which a departmental investigation has determined that sufficient evidence exists to establish probable cause of a violation of the law or regulations. Only those cases that have proceeded through an investigation to the adjudication stage are displayed. **State law prohibits the disclosure of any information about open complaints** [Code of Virginia Section 54.1-108]. (http://leg1.state.va.us/cgi-bin/legp504.exe?000+cod+54.1-108) Members of the public may review official records and obtain copies only after a complaint investigation is closed.

No Closed Complaints

"Closed Complaints" reflect complaints against regulants closed since 1990. Cases closed without disciplinary action are purged after three years in accordance with DPOR's record retention policy.

To inquire about closed complaints, see the department's Public Records Access (http://www.dpor.virginia.gov/recordsanddocuments/) or contact the department's Information Management Section at (804) 367-8583 or publicrecords@dpor.virginia.gov (mailto:publicrecords@dpor.virginia.gov).

The information on this page was last updated on 2013-09-03.

DEPARTMENT OF PROFESSIONAL AND OCCUPATIONAL REGULATION
COMMONWEALTH OF VIRGINIA

EXPIRES ON
02-28-2014

9960 Mayland Dr., Suite 400, Richmond, VA 23233
Telephone: (804) 367-8500

NUMBER
0411000385

BOARD FOR ARCHITECTS, PROFESSIONAL ENGINEERS, LAND SURVEYORS, CERTIFIED INTERIOR DESIGNERS AND LANDSCAPE ARCHITECTS
BUSINESS ENTITY BRANCH OFFICE REGISTRATION

PROFESSIONS: ENG

ECS-MID-ATLANTIC LLC
2700 INTERNATIONAL PKWY
SUITE 100
VIRGINIA BEACH, VA 23452-7855

Gordon N. Dixon, Director

ALTERATION OF THIS DOCUMENT, USE AFTER EXPIRATION, OR USE BY PERSONS OR FIRMS OTHER THAN THOSE NAMED MAY RESULT IN CRIMINAL PROSECUTION UNDER THE CODE OF VIRGINIA.

(SEE REVERSE SIDE FOR NAME AND/OR ADDRESS CHANGE)

License Lookup
Online Renewal & Services
Boards
Professions & Occupations
Forms & Applications
Fair Housing Office
Community Associations
Report a Licensee
Records & Documents
News & Information
About DPOR
Contact

Join us on Facebook

Details of license number 0411000385

print

Name:	ECS-MID-ATLANTIC LLC
License Number:	0411000385
License Description:	Business Entity Branch Office Registration
Business Name	ECS-MID-ATLANTIC LLC
Address:	2700 INTERNATIONAL PKWY SUITE 100 VIRGINIA BEACH, VA 23452
Initial Certification Date:	2004-12-10
Expiration Date:	2014-02-28

Filter:

Related Licenses

License Number	License Holder Name	License Type	License Expiry
0402045683	GOMEZ, JOSE N	Professional Engineer License	2015-07-31

Showing 1 to 1 of 1 entries

First Previous 1 Next Last

No Open Complaints

"Open Complaints" reflect only those complaints against regulants for which a departmental investigation has determined that sufficient evidence exists to establish probable cause of a violation of the law or regulations. Only those cases that have proceeded through an investigation to the adjudication stage are displayed. **State law prohibits the disclosure of any information about open complaints** [Code of Virginia Section 54.1-108]. Members of the public may review official records and obtain copies only after a complaint investigation is closed.

No Closed Complaints

"Closed Complaints" reflect complaints against regulants closed since 1990. Cases closed without disciplinary action are purged after three years in accordance with DPOR's record retention policy.

To inquire about closed complaints, see the department's Public Records Access or contact the department's Information Management Section at (804) 367-8583 or publicrecords@dpor.virginia.gov.

The information on this page was last updated on 2013-08-25.

DEPARTMENT OF PROFESSIONAL AND OCCUPATIONAL REGULATION
COMMONWEALTH OF VIRGINIA

EXPIRES ON
12-31-2013

9960 Mayland Dr., Suite 400, Richmond, VA 23233
Telephone: (804) 367-8500

NUMBER
0407003798

BOARD FOR ARCHITECTS, PROFESSIONAL ENGINEERS, LAND SURVEYORS, CERTIFIED INTERIOR DESIGNERS AND LANDSCAPE ARCHITECTS
BUSINESS ENTITY REGISTRATION

PROFESSIONS: ENG

EEE CONSULTING INC
8525 BELL CREEK RD
MECHANICSVILLE, VA 23116

Gordon N. Dixon, Director

ALTERATION OF THIS DOCUMENT, USE AFTER EXPIRATION, OR USE BY PERSONS OR FIRMS OTHER THAN THOSE NAMED MAY RESULT IN CRIMINAL PROSECUTION UNDER THE CODE OF VIRGINIA.

(SEE REVERSE SIDE FOR NAME AND/OR ADDRESS CHANGE)

License Lookup
Online Renewal & Services
Boards
Professions & Occupations
Forms & Applications
Fair Housing Office
Community Associations
Report a Licensee
Records & Documents
News & Information
About DPOR
Contact

Join us on Facebook

Details of license number 0407003798

print

Name:	EEE CONSULTING INC
License Number:	0407003798
License Description:	Business Entity Registration
Business Type:	CORP
Address:	8525 BELL CREEK RD MECHANICSVILLE, VA 23116
Initial Certification Date:	1998-08-24
Expiration Date:	2013-12-31

Filter:

Related Licenses

License Number	License Holder Name	License Type	License Expiry
0402028379	WARD, ROSS A	Professional Engineer License	2014-12-31
0402043911	MUTUC, MARIA DIVINA MANALO	Professional Engineer License	2014-01-31
0402044520	HIXON, LEE FRANKLIN JR	Professional Engineer License	2015-01-31
0402047678	SWANSON, CHRISTOPHER JAMES	Professional Engineer License	2015-06-30

Showing 1 to 4 of 4 entries

First Previous 1 Next Last

No Open Complaints

"Open Complaints" reflect only those complaints against regulants for which a departmental investigation has determined that sufficient evidence exists to establish probable cause of a violation of the law or regulations. Only those cases that have proceeded through an investigation to the adjudication stage are displayed. **State law prohibits the disclosure of any information about open complaints** [Code of Virginia Section 54.1-108]. Members of the public may review official records and obtain copies only after a complaint investigation is closed.

No Closed Complaints

"Closed Complaints" reflect complaints against regulants closed since 1990. Cases closed without disciplinary action are purged after three years in accordance with DPOR's record retention policy.

To inquire about closed complaints, see the department's Public Records Access or contact the department's Information Management Section at (804) 367-8583 or publicrecords@dpor.virginia.gov.

DEPARTMENT OF PROFESSIONAL AND OCCUPATIONAL REGULATION
COMMONWEALTH OF VIRGINIA

EXPIRES ON
12-31-2013

9960 Mayland Dr., Suite 400, Richmond, VA 23233
Telephone: (804) 367-8500

NUMBER
0413000299

BOARD FOR ARCHITECTS, PROFESSIONAL ENGINEERS, LAND SURVEYORS, CERTIFIED INTERIOR DESIGNERS AND LANDSCAPE ARCHITECTS
PROFESSIONAL LIMITED LIABILITY COMPANY

PROFESSIONS: ENG

HASSAN WATER RESOURCES PLC
HWR
2255 PARKERS HILL DRIVE
MAIDENS, VA 23102-2244

Gordon N. Dixon, Director

ALTERATION OF THIS DOCUMENT, USE AFTER EXPIRATION, OR USE BY PERSONS OR FIRMS OTHER THAN THOSE NAMED MAY RESULT IN CRIMINAL PROSECUTION UNDER THE CODE OF VIRGINIA.

(SEE REVERSE SIDE FOR NAME AND/OR ADDRESS CHANGE)

Details of license number 0413000299

print

Name:	HASSAN WATER RESOURCES PLC
Doing Business As:	HWR
License Number:	0413000299
License Description:	Professional Limited Liability Company
Address:	2255 PARKERS HILL DRIVE MAIDENS, VA 23102
Initial Certification Date:	2009-07-06
Expiration Date:	2013-12-31

Filter:

Related Licenses

License Number	License Holder Name	License Type	License Expiry
0402033382	HASSAN, GAMAL ELDIN	Professional Engineer License	2015-06-30

Showing 1 to 1 of 1 entries

First Previous 1 Next Last

No Open Complaints

"Open Complaints" reflect only those complaints against regulants for which a departmental investigation has determined that sufficient evidence exists to establish probable cause of a violation of the law or regulations. Only those cases that have proceeded through an investigation to the adjudication stage are displayed. **State law prohibits the disclosure of any information about open complaints** [Code of Virginia Section 54.1-108]. Members of the public may review official records and obtain copies only after a complaint investigation is closed.

No Closed Complaints

"Closed Complaints" reflect complaints against regulants closed since 1990. Cases closed without disciplinary action are purged after three years in accordance with DPOR's record retention policy.

To inquire about closed complaints, see the department's Public Records Access or contact the department's Information Management Section at (804) 367-8583 or publicrecords@dpor.virginia.gov.

The information on this page was last updated on 2013-08-25.

VDOT
Virginia Department of Transportation

Section 4.2.6
Work History Forms
Attachment 4.2.6(a)
Attachment 4.2.6(b)

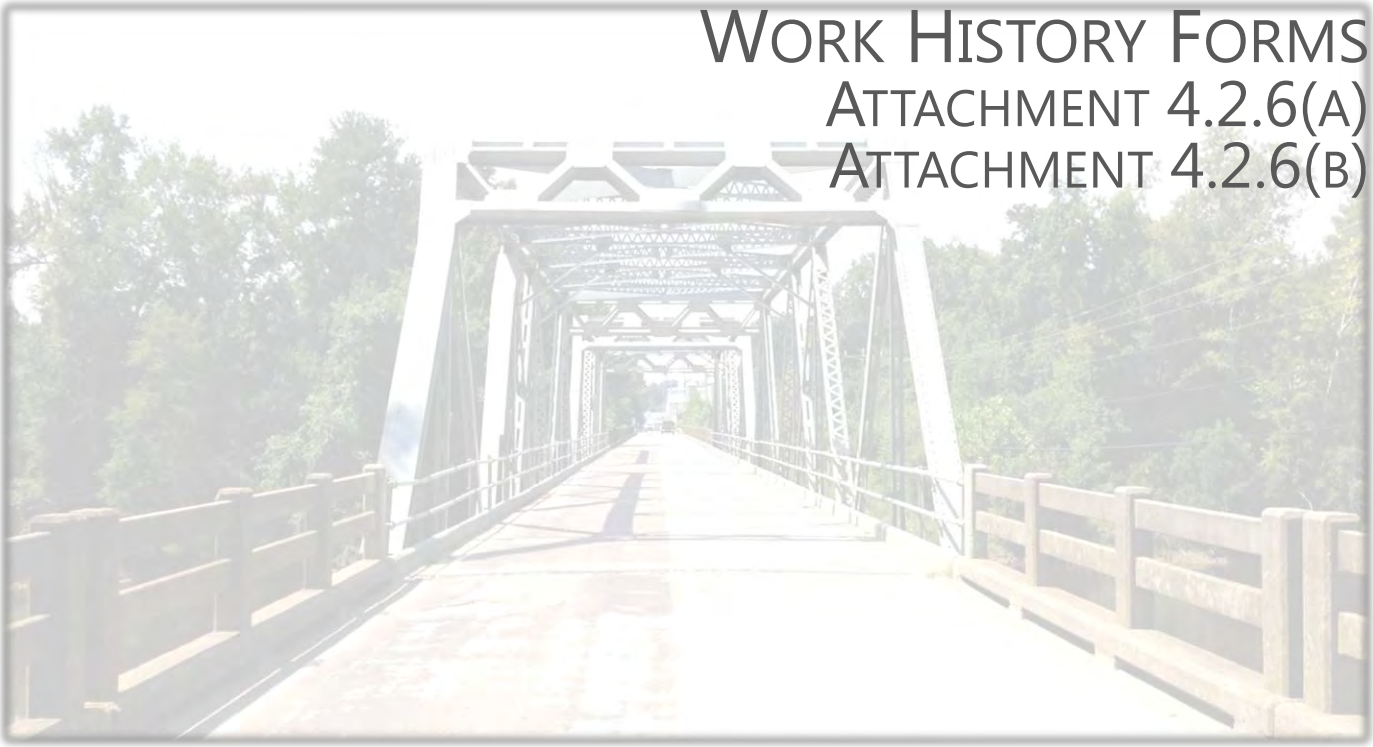

WAGMAN
Bridging Generations · Since 1902

Lead Contractor Work History Form

Attachment 4.2.6(a)

Bridging Generations · Since 1902

ATTACHMENT 4.2.6(a)

LEAD CONTRACTOR - WORK HISTORY FORM

(LIMIT 1 PAGE PER PROJECT)

a. Project Name & Location	b. Name of the prime design consulting firm responsible for the overall project design.	c. Contact information of the Client or Owner and their Project Manager who can verify Firm's responsibilities.	d. Contract Completion Date (Original)	e. Contract Completion Date (Actual or Estimated)	f. Contract Value (in thousands)		g. Dollar Value of Work Performed by the Firm identified as the Lead Contractor for this procurement.(in thousands)
					Original Contract Value	Final or Estimated Contract Value	
Name: **Susquehanna River Bridge** Location: **Harrisburg, PA**	Name: **Figg Engineering**	Name of Client./ Owner: **PA Turnpike** Phone: **717.939.9551** Project Manager: **John Ozimok** Phone: **717.939.9551 Ext 5501** Email: **jozimok@paturnpike.com**	**5/25/07**	**5/25/07**	**$32,781,000.00**	**$34,801,000.00**	**$34,801,000.00**

h. Narrative describing the Work Performed by the Firm identified as the Lead Contractor for this procurement. If the Offeror chooses to submit work completed by an affiliated or subsidiary company of the Lead Contractor, identify the full legal name of the affiliate or subsidiary and the role they will have on this Project, so the relevancy of that work can be considered accordingly.

Wagman was part of a joint venture that constructed dual 5,700-foot long bridges over the Susquehanna River in Harrisburg, PA. The project will provide 6 lanes of traffic for the Pennsylvania Turnpike patrons, replacing an outdated structure. The structure as built with the use of a stone causeway with temporary bridges to allow water flow. The causeway was installed halfway across the river, and then relocated to build the second half of the structure. Wagman re-designed the causeway to minimize environmental impacts and reduce the overall footprint of the causeway. The structure included 78 piers on drilled shafts within sheet pile cofferdams ranging in height from 35 feet to 75 feet.. On the eastern shore of the river the bridge crossed an active Amtrak line that we had to protect and maintain train traffic. On an island in the middle of the river, we had to work around native American artifacts that were uncovered. We worked with the Turnpike Commission to minimize impacts to the artifacts and impacts to the project schedule. When the bridge was completed it became the 17th bridge structure that Wagman has constructed over the Susquehanna River

Similar Scope Elements to Route 35 Bridge Replacement project			
Bridge Construction over a river	**X**	**QC**	**X**
Causeway construction, manipulation and removal	**X**	**Geotechnical challenges**	**X**
Environmental compliance	**X**		

Lessons Learned

- Coordination with Amtrak
- Environmental permit modifications to minimize impacts
- Working from a causeway with fluctuations in water levels due to storm events
- Archeological coordination
- Complex foundations in rock

ATTACHMENT 4.2.6(a)

LEAD CONTRACTOR - WORK HISTORY FORM

(LIMIT 1 PAGE PER PROJECT)

a. Project Name & Location	b. Name of the prime design consulting firm responsible for the overall project design.	c. Contact information of the Client or Owner and their Project Manager who can verify Firm's responsibilities.	d. Contract Completion Date (Original)	e. Contract Completion Date (Actual or Estimated)	f. Contract Value (in thousands)		g. Dollar Value of Work Performed by the Firm identified as the Lead Contractor for this procurement.(in thousands)
					Original Contract Value	Final or Estimated Contract Value	
Name: **Youghiogheny River Bridge Replacement** Location: **Fayette County, PA**	Name: **Gannett Fleming**	Name of Client./ Owner: **PADOT** Phone: **724.439.7137** Project Manager: **Bill Kovach** Phone: **724.439.7137** Email: **wkovach@state.pa.us**	**12/15/06**	**12/15/06**	**$25,381,000.00**	**$25,699,000.00**	**$25,699,000.00**

h. Narrative describing the Work Performed by the Firm identified as the Lead Contractor for this procurement. If the Offeror chooses to submit work completed by an affiliated or subsidiary company of the Lead Contractor, identify the full legal name of the affiliate or subsidiary and the role they will have on this Project, so the relevancy of that work can be considered accordingly.

The project involved construction of a 1500-ft long steel bridge over the Youghiogheny River in Southwest Pennsylvania. This section of the river is managed as a reservoir and the water levels vary as much a 40-ft over the course of a year. Wagman was responsible for the Design and Construction of the bridge and through innovation we were able to eliminate multiple piers within the river to minimize cost and environmental impacts. When the water levels were high we would access most of the project with floating equipment and when the water was low we installed a causeway. Piers were constructed using 9-ft diameter caissons in over 75 –ft. of water with 8-ft diameter columns above the high water level; pier caps connected the columns. Structural steel was erected form barges. Roadway approaches had to be widened and reconstructed to allow for a wider structure. Fills were widened and rock slope protection was placed on the upstream side of the new fill. Drainage was reconstructed to accommodate the new roadway and structure and utilizes were relocated across the new bridge to allow uninterrupted service. We were required to remove the existing structure which consisted of steel beams and steel trusses and piers were removed with explosives and the rubble became fish habitat per the environmental permit.

Similar Scope Elements to Route 35 Bridge Replacement project			
Bridge construction over a river	**X**	**Environmental compliance**	**X**
DB coordination on bridge design	**X**	**Work within environmentally sensitive flood control**	**X**
Quality control	**X**	**Explosive demolition**	**X**
Ready mix concrete production	**X**	**Floating construction**	**X**
Large Caisson construction	**X**		

Lessons Learned

- Complex Geotechnical foundations
- High water fluctuation due to storm events and managed flood control
- Explosive demolition
- Ready Mix Concrete Production
- Large Caisson construction
- Floating Construction

ATTACHMENT 4.2.6(a)

LEAD CONTRACTOR - WORK HISTORY FORM

(LIMIT 1 PAGE PER PROJECT)

a. Project Name & Location	b. Name of the prime design consulting firm responsible for the overall project design.	c. Contact information of the Client or Owner and their Project Manager who can verify Firm's responsibilities.	d. Contract Completion Date (Original)	e. Contract Completion Date (Actual or Estimated)	f. Contract Value (in thousands)		g. Dollar Value of Work Performed by the Firm identified as the Lead Contractor for this procurement.(in thousands)
					Original Contract Value	Final or Estimated Contract Value	
Name: **Salisbury Bypass Phase II – Wicomico River Bridge** Location: **Salisbury MD**	Name: **Whitney Baily Cox and Magnami**	Name of Client./ Owner: **Maryland SHA** Phone: **410.677.4000** Project Manager: **Donnie Drewer** Phone: **410.677.4006** Email: **ddrewer@sha.md.us**	**10/14/02**	**10/14/02**	**$6,681,000.00**	**$6,665,000.00**	**$6,665,000.00**

h. Narrative describing the Work Performed by the Firm identified as the Lead Contractor for this procurement. If the Offeror chooses to submit work completed by an affiliated or subsidiary company of the Lead Contractor, identify the full legal name of the affiliate or subsidiary and the role they will have on this Project, so the relevancy of that work can be considered accordingly.

Wagman constructed the bridge structures on the Salisbury Bypass Phase 2. The main structure was s dual bridge across the Wicomico river in Salisbury MD. Due to environmental impacts the new bridges were to be constructed from a trestle bridge. All pile driving, substructure concrete, beam erection and deck placement was completed from the temporary bridge. Wagman was responsible for the design and construction of the temporary structure. During planning for bridge construction we identified that the original design created a large environmental impact to the wetlands and Wicomico floodplain. Through a partnership with Maryland SHA and the local district we proposed the re-design the bridge structure to lengthen the bridge and get the bridge abutments outside of the floodplains. Maryland SHA responded favorably to our proposition and we worked together to re-design the bridge and eliminate or minimize impacts to the flood plain and wetlands. The Army Corps of Engineers awarded the project an environmental award for the effort. This project also received the Maryland Quality Initiative award for best Large Project. The Wicomico River is a slow moving with a deep channel but wide floodplains, because the river overflows its banks with any major storm event.

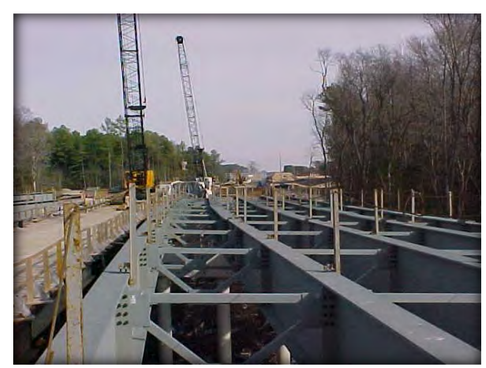

Similar Scope Elements to Route 35 Bridge Replacement project			
Bridge Construction over a river	**X**	**Environmental Compliance**	**X**
Construction from a temporary bridge structure (if required)	**X**	**Work within environmentally sensitive floodplain**	**X**
DB Coordination on bridge re-design	**X**	**Geotechnical Challenges**	**X**
Permit modification to minimize environmental impacts	**X**		

Lessons Learned

- Driving 24-inch pile
- Environmental permit modifications to minimize impacts
- Limited access for construction
- High water fluctuation due to storm events

Lead Designer Work History Form

Attachment 4.2.6(b)

WAGMAN

Bridging Generations · Since 1902

ATTACHMENT 4.2.6(b)

LEAD DESIGNER - WORK HISTORY FORM

(LIMIT 1 PAGE PER PROJECT)

a. Project Name & Location	b. Name of the prime/ general contractor responsible for overall construction of the project.	c. Contact information of the Client and their Project Manager who can verify Firm's responsibilities.	d. Construction Contract Completion Date (Original)	e. Construction Contract Completion Date (Actual or Estimated)	f. Contract Value (in thousands)		g. Design Fee for the Work Performed by the Firm identified as the Lead Designer for this procurement.(in thousands)
					Construction Contract Value (Original)	Construction Contract Value (Actual or Estimated)	
Name: **11th Street Bridges And Interchanges, Phase I Design-Build** Location: **Washington, D.C.**	Name: **Skanska USA Civil Southeast Inc. Facchina Construction Company, Inc., A Joint Venture**	Name of Client.: **District Dept. of Transportation** Phone: **202.673.6813** Project Manager: **Ronaldo T. Nicholson, P.E.** Phone: **202.671.4691** Email: **ronaldo.nicholson@dc.gov**	**July 2013 (Original)**	**June 2013 (Actual)**	**$260,000 Contract Value (Original)**	**$287,600 Contract Value (Actual)**	**$17,300 Design Fee**

h. Narrative describing the Work Performed by the Firm identified as the Lead Designer for this procurement. Include the office location(s) where the design work was performed and whether the firm was the prime designer or a subconsultant.

The Skanska/Facchina/JMT Design-Build Team was selected by the District Department of Transportation (DDOT) for this stipulated sum D-B Project of $260M project in DC (the largest construction project in DDOT history). *JMT was the Lead/Prime Designer and the design work was performed from Headquarters in Sparks, MD, Virginia Offices (Herndon & Richmond) and Washington, DC Project office.* The engineer's original estimate for this project was $460M (including initial and ultimate design); due to budget constraints, DDOT used the D-B procurement method to maximize construction of project elements, functional replacement of existing bridges, and interchange modifications. The ultimate portion of the project not built within the stipulated sum of $260M will be advertised as a separate contract and is valued at approx. $80M. By utilizing innovative design in revising the planning document alignments and interchanges to reduce cost, and environmental/community impacts to save substantial construction cost, JMT's initial design and ultimate design total construction value is approx. $340M resulting in a $120M savings to DDOT from the original engineer's estimate. This project includes three new major continuous steel multi-girder bridge crossings of the Anacostia River and two complex interchanges with the Southeast Freeway and Anacostia Freeway (I-295). These bridges include a 5-span 866 ft. long bridge, a 5-span 926 ft. long bridge and a 10-span 1,650 ft. long bridge. Spans range up to 234 ft. for the main span over the Anacostia River. Several existing bridges are being rehabilitated for use in the new interchanges. JMT is providing the full range of technical services which include: highway and structural design; field surveys; subsurface utility investigations; traffic analysis/highly complex MOT plans for various phases of construction; utility coordination; design of utility relocations; drainage, ESC and SWM; environ. permitting and monitoring/compliance programs; geotechnical engineering; hazardous materials and other environ. investigations; landscaping; and construction administration services.

This project will allow better regional connections and provide drivers with easier accessibility to DC neighborhoods. Bridges will connect the Anacostia and Southeast Freeways, adding new traffic movements. These new bridges will replace deficient infrastructure and will provide alternative routes in and out of the nation's capital. The major improvements include:

- ✓ An at-grade intersection will be provided at O and 11th Streets in front of the Navy Yard to promote and invite people to the river.
- ✓ Enhancements will be made to the M and N Street intersections with 11th Street and the inbound Southeast Boulevard will be connected to 11th Street at grade.
- ✓ A new ramp connection will be provided from the regional roadway network to M St. and the existing ramp from the inbound regional roadway to I St. will be maintained using the existing flyover.
- ✓ New connections from 11th Street to the regional roadway network will be provided at the intersection with Southeast Boulevard (Ramp D-3) and at the intersection with M Street.
- ✓ Bore and jack below water table for Diversion 005 on east side of Anacostia River.
- ✓ A continuous connection for local traffic is provided from the intersection of 11th St. and Good Hope Rd. on the Anacostia side of the river to the intersection of 11th and I Streets on the Capitol Hill side of the river.
- ✓ On the Anacostia side of the river, a modified diamond interchange will provide full access to the Anacostia Freeway from 11th Street.
- ✓ Access to the park is provided by the proposed Park Access Road.
- ✓ The proposed river crossing bridge will be 4 lanes, two in each direction. This newly constructed river bridge will also provide a 16-foot shared use path for pedestrian and bicycle traffic connecting both sides of the river and connecting to the Anacostia Park along the Park Access Road.

Recently, DC officials celebrated a major milestone on this project by holding a ribbon cutting ceremony to mark the completion of the new river crossing freeway bridges, which for the first time, a seamless connection between the Southeast-Southwest Freeway and the Anacostia Freeway near the U.S. Capitol was realized. Project representatives from JMT joined DC Mayor Vincent Gray and other elected officials, as well as our D-B contracting partners from the Contractors Team, to commemorate the completion of the first phase. The entire project is expected to open by the summer of 2015 and will include lanes for local and through traffic, a shared pedestrian/bicycle pathway, and space for future transit considerations.

Similar Scope Elements to Route 35 Bridge Replacement project			
Design-Build Project	**X**	**Geotechnical Challenges**	**X**
Road Design and Construction	**X**	**QA/QC**	**X**
Bridge Design and Construction (In Stream)	**X**	**Public Involvement/Relations**	**X**
Utility Relocation and Coordination	**X**	**Project Management**	**X**

Lessons Learned

- Independent QA/QC extremely valuable to both VDOT and D-B team by promoting objectivity throughout the entire process.
- Developed alternate phased MOT plan to maintain 2 way traffic through the work zone and to accommodate emergency responders within the project limits without disrupting traveling public.
- Gained valuable VDOT Design-Build experience working on one of the first D-B projects advertised by the Innovative Project Delivery Division.

ATTACHMENT 4.2.6(b)

LEAD DESIGNER - WORK HISTORY FORM

(LIMIT 1 PAGE PER PROJECT)

a. Project Name & Location	b. Name of the prime/ general contractor responsible for overall construction of the project.	c. Contact information of the Client and their Project Manager who can verify Firm's responsibilities.	d. Construction Contract Completion Date (Original)	e. Construction Contract Completion Date (Actual or Estimated)	f. Contract Value (in thousands)		g. Design Fee for the Work Performed by the Firm identified as the Lead Designer for this procurement.(in thousands)
					Construction Contract Value (Original)	Construction Contract Value (Actual or Estimated)	
Name: **Taylor Street Bridge Replacement Design-Build** Location: **Washington, D.C.**	Name: **Cherry Hill Construction**	Name of Client.: **Federal Highway Administration (EFLHD)** Phone: **703.404.6271** Project Manager: **Doug Nair** Phone: **703.404.6271** Email: **douglas.nair@dot.gov**	**2006**	**2006**	**$9,772 Construction Fee** **$1,096 Design Fee**	**$10,700 Construction Fee** **$1,096 Design Fee**	**$10,700 Construction Fee** **$1,096 Design Fee**

h. Narrative describing the Work Performed by the Firm identified as the Lead Designer for this procurement. Include the office location(s) where the design work was performed and whether the firm was the prime designer or a subconsultant.

The Federal Highway Administration-Eastern Federal Lands Highway Division (EFLHD) as the representative for the District Department of Transportation (DDOT) selected the team of Cherry Hill Construction (CHC) and Johnson, Mirmiran and Thompson (JMT) for this challenging $10.9M design-build project in northeastern Washington, D.C. *JMT was the prime designer of the below described pr oejct and performed the work our of their Sparks, Maryland office.*

The structure carries Taylor Street over Brookland Avenue as well as WMATA and CSXT tracks. The existing bridge was a five-span structure originally constructed in 1939 and rehabilitated in 1968 and 1983. The bridge carried 4-lanes of traffic and two (2) sidewalks with an overall width of 61 feet 8 inches. The superstructure was a combination of steel box girders, steel beam girders and concrete T-beam girders with plate steel enclosures along the fascia overhangs. The substructure included both piling and spread footing foundation conditions and hybrid abutments.

CHC/JMT developed an innovative and cost effective solution for this project as part of the preparation for the Technical and Price Proposals. After reviewing the information presented in the RFP, CHC/JMT enhanced the Government's proposed four-span layout by proposing the new Taylor Street Bridge as a two-span continuous structure using hybrid plate girders. The east approach, supported by MSE walls, was lengthened to reduce the overall span length to 294 LF, subsequently eliminating a pier and economizing the abutment design. Additional work included the reconstruction of Puerto Rico Avenue (adjacent to the bridge) with full depth pavement, improvements to the entrance of several nearby businesses, and the replacement of a failed retaining wall. Final design and plans were completed using AASHTO LRFD, EFLHD and DDOT criteria and requirements. All design and construction efforts were fully coordinated with the EFLHD, DDOT, WMATA, CSXT, Advisory Neighborhood Committees, DCWASA, Pepco, and various DC Divisions and Administrations including; Transportation Operations, Traffic Safety, Traffic Signal, Street Lighting, Department of the Environment, and Infrastructure Project Management. CHC/JMT provided Design and Construction QA/QC throughout the project based on an owner accepted plan. The CHC/JMT approach to this project provided many benefits including:

- ✓ A complete new bridge consisting of driven H-Pile foundations, MSE walls with architectural treatment, cast-in-place footings, abutments, and piers, fabricated structural steel girders comprised of Grade 50 webs and Grade 70 flanges, cast-in-place superstructure including bridge deck, parapets, and approach slabs.
- ✓ Semi-integral abutments to eliminate end dam expansion joint conditions and increase bridge design life.
- ✓ Single pier built outside Railroad right-of-way to facilitate future maintenance and/or improvements.
- ✓ Eliminating an existing pier that restricted turning movements of vehicles utilizing Puerto Rico Avenue.
- ✓ Replacement of the failing retaining wall along Puerto Rico Avenue with a precast gravity wall containing integral aesthetic treatment without affecting the foundations of adjacent private residences.
- ✓ Developed a creative bridge streetscape arrangement to accentuate the aesthetic value of individual bridge components
- ✓ MSE walls utilizing architectural stone form liner pattern and precast coping/parapet sections.
- ✓ Long approach slabs to improve the smoothness of the riding surface at the bridge abutment interface.
- ✓ Highly engineered demolition and shielding to facilitate demolition of the complex existing structure.
- ✓ New traffic signals at the Taylor Street/Puerto Rico Avenue intersection.Bridge replacement performed under multiple traffic control phases to accommodate an ADT of 18,000 commuters, local businesses and local community residents throughout the entire project duration.
- ✓ A project completion schedule of 630 calendar days, 100 days less than required.

Similar Scope Elements to Route 35 Bridge Replacement			
Design-Build Project	**X**	**Environmental Permits**	**X**
Road Design and Construction	**X**	**QA/QC**	**X**
Bridge Design and Construction	**X**	**Public Involvement/Relations**	**X**
Utility Relocation and Coordination	**X**	**Project Management**	**X**
Geotechnical Challenges	**X**		

Lessons Learned

- Extensive Maintenance of Traffic plans dealing with high traffic volume in an urbanized area.
- Extensive Railroad Coordination and proactive approach to mitigating impacts.
- Interactive coordination with all utilities and specifically with DC Water and Sewer Authority.
- Stormwater Management (SWM) challenges to meet SWM regulations within the limited Right of Way available.

ATTACHMENT 4.2.6(b)

LEAD DESIGNER - WORK HISTORY FORM

(LIMIT 1 PAGE PER PROJECT)

a. Project Name & Location	b. Name of the prime/ general contractor responsible for overall construction of the project.	c. Contact information of the Client and their Project Manager who can verify Firm's responsibilities.	d. Construction Contract Completion Date (Original)	e. Construction Contract Completion Date (Actual or Estimated)	f. Contract Value (in thousands)		g. Design Fee for the Work Performed by the Firm identified as the Lead Designer for this procurement.(in thousands)
					Construction Contract Value (Original)	Construction Contract Value (Actual or Estimated)	
Name: **Fairfax County Parkway (Route 7100) Design Build** Location: **Fairfax County, VA**	Name: **Cherry Hill Contruction, Inc.**	Name of Client.: **Federal Highway Administration - Eastern Federal Lands Highway Division** Phone: **703.404.6217** Project Manager: **Robert A. Morris, PE** Phone: **703.404.6302** Email: **robert.morris@dot.gov**	**Phases I/II** December 2010 **Phase IV** July 2010	**Phases I/II** September 2010 (Actual) **Phase IV** July 2010 (Actual)	**$85,472**	**$112,500** Increase due to addition of Phase IV (Actual)	**$11,538**

h. Narrative describing the Work Performed by the Firm identified as the Lead Designer for this procurement. Include the office location(s) where the design work was performed and whether the firm was the prime designer or a subconsultant.

The Design-Build (D-B) Team of Johnson, Mirmiran & Thompson, Inc. (JMT) and Cherry Hill Construction, Inc. (CHC) was selected as the best value team for the Fairfax County Parkway (FCP) project by the Federal Highway Administration's Eastern Federal Lands Highway Division (EFLHD), Virginia Department of Transportation (VDOT) and U.S. Army Garrison Fort Belvoir.

JMT, as prime designer performed the engineering from their Richmond, Virginia office, and was responsible for complete design of project including work in the following disciplines: highway, structural, water resources, traffic, multipurpose trail, lighting designs, surveys, utility designations, subsurface utility engineering, geotechnical engineering, environmental analysis and permitting.

The 4-lane divided limited access highway on new location completes the missing connection of FCP to I-95. The project corridor begins at Rolling Road/Franconia-Springfield Parkway and proceeds southeastward on a new alignment and ends just east of Fullerton Road and includes new interchanges at Boudinot Drive and at the new Fort Belvoir Engineering Proving Ground (EPG) Access Road (Barta Road). The work involved in the parkway extension includes design of: highway and interchange ramps, bike paths, six new bridges and one bridge widening, retaining walls, noise walls, box culverts, sign structures, grading, drainage, storm water management, erosion and sediment control, landscaping, traffic analysis, traffic simulation, traffic signals, signing and striping, dynamic message signing, lighting and pavement marking as well as maintenance of traffic and a Type C Transportation Management Plan for a complicated construction detouring scheme. The project also included special coordination requirements with Fort Belvoir environmental staff due to the presence of contaminated soil/groundwater and the possibility of unexploded ordinance on the site as well as environmental permitting with the USACE for the Accotink Creek bridge construction. In addition, the project included widening of southbound I-95 to accommodate a new exit lane. The project had an extremely aggressive 750 calendar day schedule.

During the bidding process, JMT prepared alternate technical concepts that improved the overall project design and reduced the cost. The JMT/Cherry Hill Construction team was selected based on the alternate technical concepts prepared by JMT and the overall best value that our team's proposal offered to EFLHD. The most significant change identified was the "Fullerton Flip". The original design depicted Fullerton Road crossing over Fairfax County Parkway. JMT was able to revise the profiles for both the Fairfax County Parkway and Fullerton Road to take the Parkway over Fullerton Road. The benefits that raising the grade of FCP brought to the project were:

- ✓ Reduced the amount of soil and rock excavation by also raising Boudinot Drive.
- ✓ Minimized the disturbance of contaminated material by placing embankment over the Central Motors site.
- ✓ Reduced the surplus material on the project.
- ✓ Resulted in a balanced earthwork project significantly reducing project cost.

Similar Scope Elements to Route 35 Bridge Replacement project	
Design-Build Project	**X**
Road Design and Construction	**X**
Bridge Design and Construction (In Stream)	**X**
Utility Relocation and Coordination	**X**
Geotechnical Challenges	**X**
QA/QC	**X**
Public Involvement/Relations	**X**
Project Management	**X**

Lessons Learned

- Coordinated the mitigation and processing of design waivers and exceptions from previously approved CTB plans, allowing the project to remain within boundaries established by the MOA between project stakeholders (VDOT, EFLHD, US Army, and Fairfax County) and keeping the commitments of the ROD.
- Designed significant profile revisions to minimize surplus material, thereby avoiding impacts to HAZMAT and UXO's, and reducing construction traffic on the local road network.
- Conducted extensive coordination process to satisfy the varying and diverse needs of the major stakeholders.
- Extensive Public Relations Campaign and Partnering Approach to Project was Key to Successful Implementation of a Year Long Detour of Existing Ramp
- Rapidly accommodated multiple owner options into the plans while maintaining the design and construction schedules

Virginia Department of Transportation

Section 4.2.7
Conceptual Roadway Plans

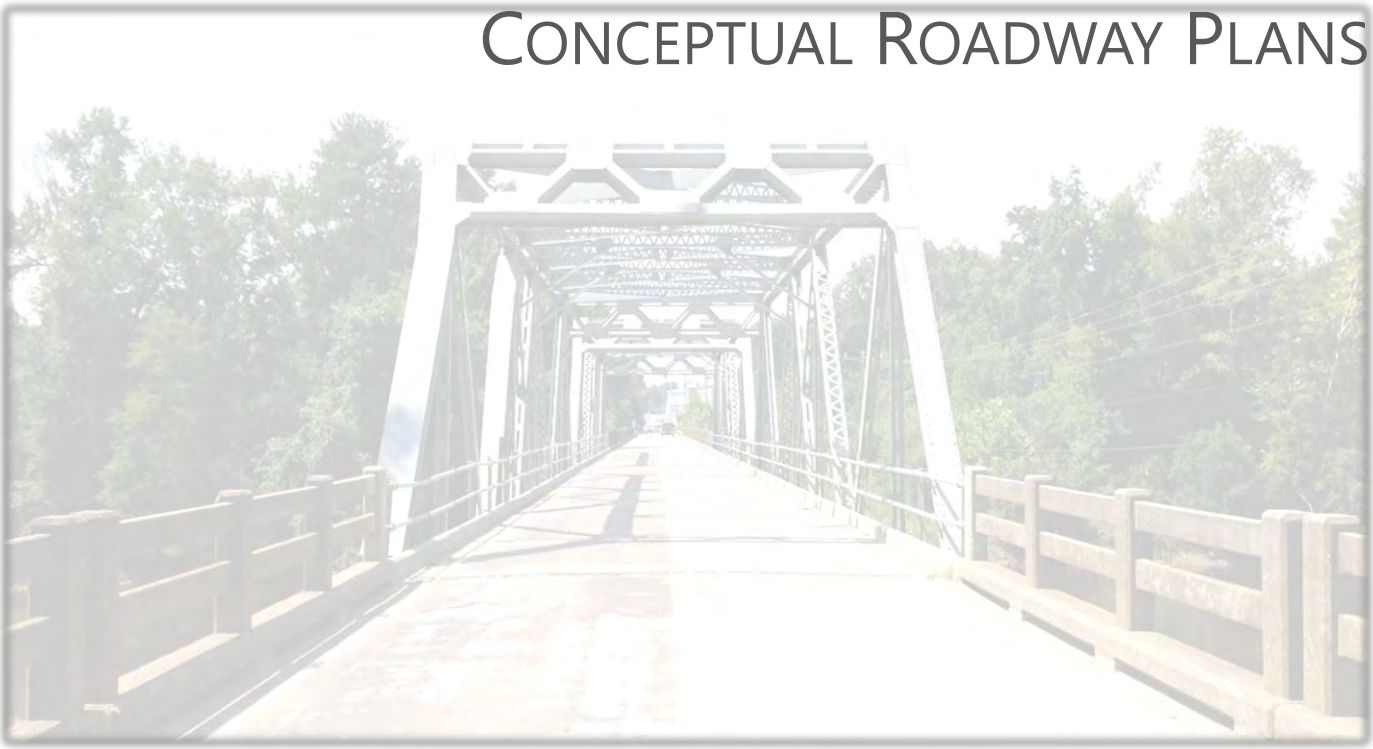

WAGMAN

Bridging Generations · Since 1902

PROJECT MANAGER John G. Harman, P.E. (757) 925-2308 (Hampton Roads)
SURVEYED BY, DATE Walter D. Freeman, L.S. (757) 925-1608 (Hampton Roads), 9/8/11
DESIGN SUPERVISED BY Jason Henry, P.E. (804) 786-5975 (Central Office)
SUBSURFACE UTILITY BY, DATE Walter D. Freeman, L.S. (757) 925-1608 (Hampton Roads), 9/9/11

FOR INDEX OF SHEETS SEE SHEET 1B

FHWA 534 DATA 14011

STATE	FEDERAL AID PROJECT	STATE ROUTE	STATE PROJECT	SHEET NO.
VA.	BR-087-5 ( ) (SEE TABULATION BELOW FOR SECTION NUMBERS)	35	(NFO)0035-087-112 (SEE TABULATION BELOW FOR SECTION NUMBERS)	1

THIS PROJECT WAS DEVELOPED UTILIZING THE DEPARTMENT'S ENGINEERING DESIGN PACKAGE (GEOPAK).
GEOPAK Computer Identification No. 81457

COMMONWEALTH OF VIRGINIA
DEPARTMENT OF TRANSPORTATION

PLAN AND PROFILE OF PROPOSED
STATE HIGHWAY

SOUTHAMPTON COUNTY

Fr: 0.072miles West of Southhampton County Line
To: 0.364miles West of Southampton County Line

FUNCTIONAL CLASSIFICATION AND TRAFFIC DATA	
Rural Collector(GS-3)- Undivided-Level 50MPH-Min.Design Speed	
	Fr: 0.072miles West of Southhampton County Line To: 0.364miles West of Southhampton County Line
ADT(2012)	3,400
ADT (2036)	4,525
DHV	410
D (%) (design hour)	50/50
T (%) (design hour)	6%
V (MPH)	50 MPH

THESE PLANS ARE UNFINISHED AND UNAPPROVED AND ARE NOT TO BE USED FOR ANY TYPE OF CONSTRUCTION OR THE ACQUISITION OF RIGHT OF WAY.

ADDITIONAL EASEMENTS FOR UTILITY RELOCATIONS MAY BE REQUIRED BEYOND THE PROPOSED RIGHT- OF- WAY SHOWN ON THESE PLANS.

CONVENTIONAL SIGNS

STATE LINE
COUNTY LINE
CITY,TOWN OR VILLAGE
RIGHT OF WAY LINE
FENCE LINE
UNFENCED PROPERTY LINE
FENCED PROPERTY LINE
WATER LINE
SANITARY SEWER LINE
GAS LINE
ELECTRIC UNDERGROUND CABLE
TRAVELED WAY
GUARD RAIL
RETAINING WALL
RAILROADS
BASE OR SURVEY LINE
LEVEE OR EMBANKMENT
BRIDGES
CULVERTS
DROP INLET
POWER POLES
TELEPHONE OR TELEGRAPH POLES
TELEPHONE OR TELEGRAPH LINES
HEDGE
TREES
HEAVY WOODS
GROUND ELEVATION
GRADE ELEVATION

DESCRIPTION REFERENCE:
POT Sta. 8+27.49 Rte. 35 Constr. Baseline

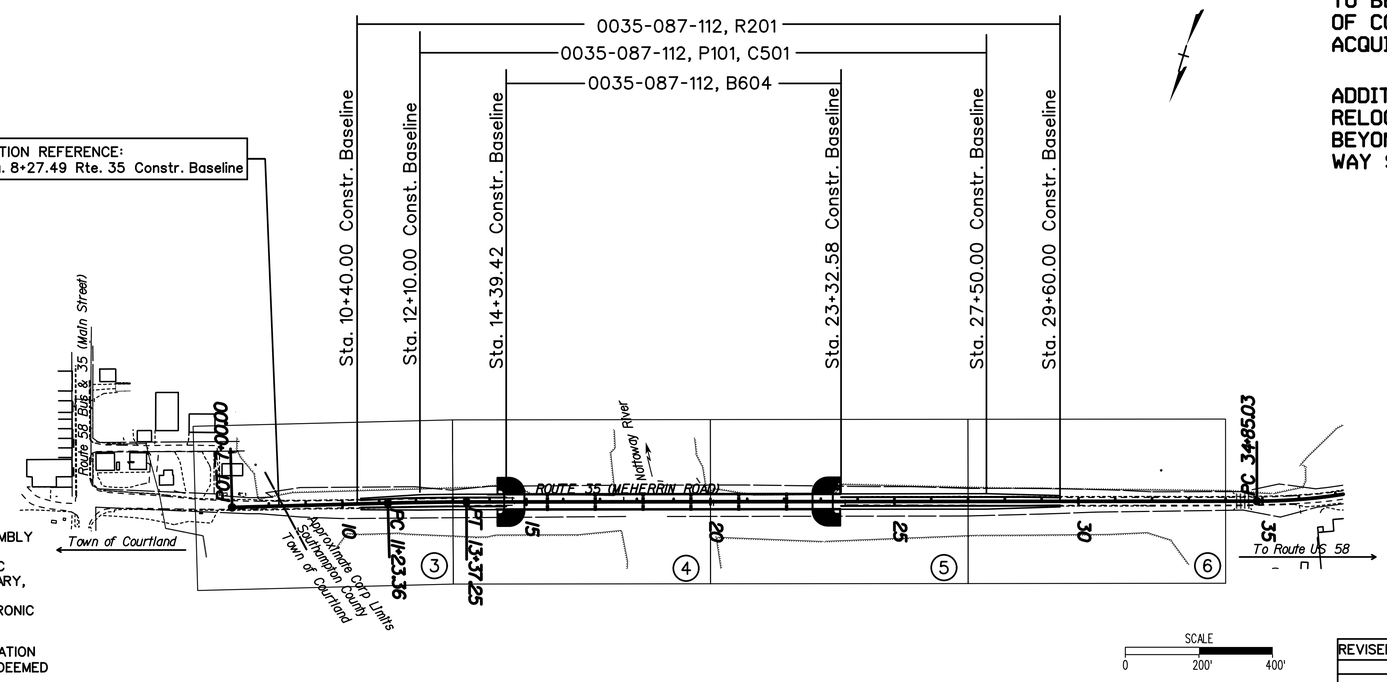

TIER 2 PROJECT

RECOMMENDED FOR APPROVAL FOR RIGHT OF WAY ACQUISITION	
DATE	PROGRAMMING DIVISION DIRECTOR
DATE	STATE LOCATION AND DESIGN ENGINEER
DATE	CHIEF OF PLANNING AND PROGRAMMING
DATE	CHIEF ENGINEER

APPROVED FOR RIGHT OF WAY ACQUISITION	
DATE	CHIEF OF POLICY AND ENVIRONMENT

RECOMMENDED FOR APPROVAL FOR CONSTRUCTION	
DATE	PROGRAMMING DIVISION DIRECTOR
DATE	STATE LOCATION AND DESIGN ENGINEER
DATE	STATE STRUCTURE AND BRIDGE ENGINEER
DATE	CHIEF OF PLANNING AND PROGRAMMING

APPROVED FOR CONSTRUCTION	
DATE	CHIEF ENGINEER

APPROVED	
DATE	DIVISION ADMINISTRATOR FEDERAL HIGHWAY ADMINISTRATION U.S. DEPARTMENT OF TRANSPORTATION

REVISED

THE COMPLETE ELECTRONIC PDF VERSION OF THE PLAN ASSEMBLY AS AWARDED, HAS BEEN SEALED AND SIGNED USING DIGITAL SIGNATURES AND THE OFFICIAL PLAN ASSEMBLY IN ELECTRONIC FORMAT IS STORED IN THE VDOT CENTRAL OFFICE PLAN LIBRARY, INCLUDING ALL SUBSEQUENT REVISIONS, WILL BE THE OFFICIAL CONSTRUCTION PLANS. FOR INFORMATION RELATIVE TO ELECTRONIC FILES AND LAYERED PLANS, SEE THE GENERAL NOTES.

DESIGN FEATURES RELATING TO CONSTRUCTION OR TO REGULATION AND CONTROL OF TRAFFIC MAY BE SUBJECT TO CHANGE AS DEEMED NECESSARY BY THE DEPARTMENT.

THIS PROJECT IS TO BE CONSTRUCTED IN ACCORDANCE WITH THE DEPARTMENT'S 2007 ROAD AND BRIDGE SPECIFICATIONS, 2008 ROAD AND BRIDGE STANDARDS, 2009 MUTCD, 2011 VIRGINIA SUPPLEMENT TO THE MUTCD, 2011 VIRGINIA WORK AREA PROTECTION MANUAL AND AS AMENDED BY CONTRACT PROVISIONS AND THE COMPLETE ELECTRONIC PDF VERSION OF THE PLAN ASSEMBLY.

ALL CURVES ARE TO BE SUPERELEVATED, TRANSITIONED AND WIDENED IN ACCORDANCE WITH STANDARD TC-5.01R, EXCEPT WHERE OTHERWISE NOTED.

THE ORIGINAL APPROVED TITLE SHEET(S), INCLUDING ORIGINAL SIGNATURES, ARE FILED IN THE VDOT CENTRAL OFFICE PLAN LIBRARY. ANY MISUSE OF ELECTRONIC FILES, INCLUDING SCANNED SIGNATURES, IS ILLEGAL AND ENFORCED TO THE FULL EXTENT OF THE LAW.

Population SouthHampton 18,570 (2010 Census)

STATE PROJECT NO.	SECTION	FEDERAL AID PROJECT NO.	TYPE CODE	UPC NO.	EQUALITIES (FEET)	LENGTH INCLUDING BRIDGE(S) FEET	LENGTH INCLUDING BRIDGE(S) MILES	LENGTH EXCLUDING BRIDGE(S) FEET	LENGTH EXCLUDING BRIDGE(S) MILES	BRIDGE PROJECT NO.	TYPE PROJECT	DESCRIPTION
0035-087-112	PE-101	BR-087-5(014)	P	81457		1540.00	0.292	646.84	0.123		PREL. ENGR	Fr: 0.072miles West of Southhampton County Line To: 0.364miles West of Southhampton County Line
	C-501		P	81457		1540.00	0.292	646.84	0.123		CONSTRUCTION	
	RW- 201			81457		1920.00	0.364	1010	0.191		RIGHT OF WAY	Fr: 0.040miles West of Southhampton County Line To: 0.404miles West of Southhampton County Line
	B-604		P	81457		893.16	0.169				BRIDGE	Prop. Bridge and Approaches over Nottoway River

Project Lengths are based on Construction Baseline.

Copyright 2012, Commonwealth of Virginia

PROJECT MANAGER John G. Harman, P.E. (757) 925-2308 (Hampton Roads)
SURVEYED BY, DATE Walter D. Freeman, L.S. (757) 925-1608 (Hampton Roads), 9/8/11
DESIGN BY Jason Henry, P.E. (804) 786-5975 (Central Office)
SUBSURFACE UTILITY BY, DATE Walter D. Freeman, L.S. (757) 925-1608 (Hampton Roads), 9/9/11

TYPICAL SECTIONS

THESE PLANS ARE UNFINISHED AND UNAPPROVED AND ARE NOT TO BE USED FOR ANY TYPE OF CONSTRUCTION OR THE ACQUISITION OF RIGHT OF WAY.

VDOT (Division) or Co. Name (Location), Virginia (TECHNICAL DISCIPLINE)	VDOT (Division) or Co. Name (Location), Virginia (TECHNICAL DISCIPLINE)

REVISED	STATE	STATE ROUTE	STATE PROJECT	SHEET NO.
	VA.	35	0035-087-112, RW201, C501, B604	2A

DESIGN FEATURES RELATING TO CONSTRUCTION OR TO REGULATION AND CONTROL OF TRAFFIC MAY BE SUBJECT TO CHANGE AS DEEMED NECESSARY BY THE DEPARTMENT

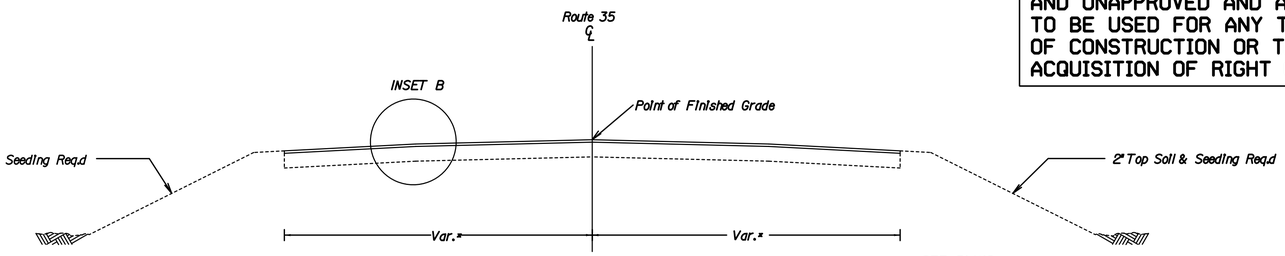

Station 10+25.00 to 10+50.00
Station 29+50.00 to 29+75.00

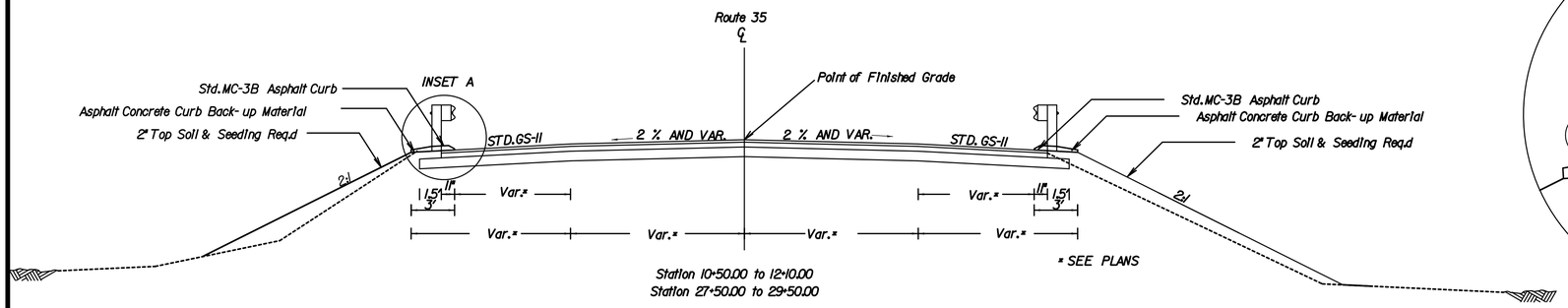

Station 10+50.00 to 12+10.00
Station 27+50.00 to 29+50.00

INSET A

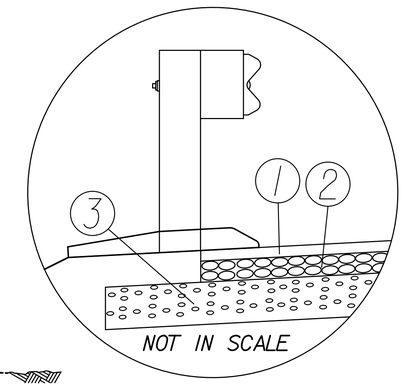

INSET B

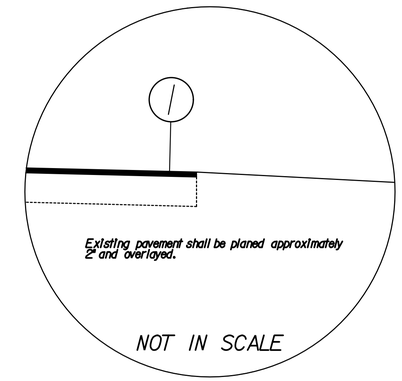

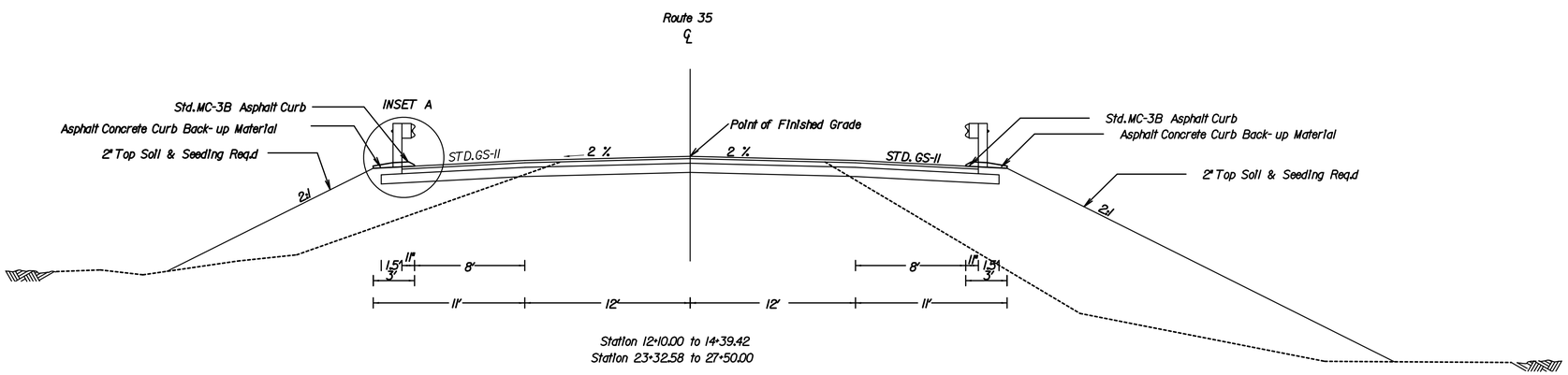

Station 12+10.00 to 14+39.42
Station 23+32.58 to 27+50.00

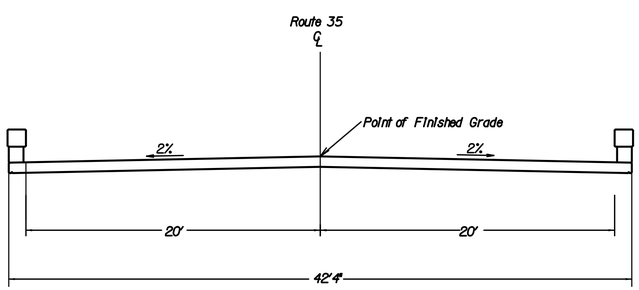

Station 14+39.42.00 to 23+32.58
(See Bridge Plan Number 031-13a for details)

PAVEMENT LEGEND

1. Asphalt Concrete, Type SM-12.5A estimated at 220 lbs/sy
2. 4" Asphalt Concrete Type BM-25.0A
3. 6" Aggregate Base Material, Type I, Size No. 21B

PROJECT	SHEET NO.
0035-087-112	2A

PROJECT MANAGER John G. Harman, P.E. (757) 925-2308 (Hampton Roads)
SURVEYED BY, DATE Walter D. Freeman, L.S. (757) 925-1608 (Hampton Roads), 9/8/11
DESIGN SUPERVISED BY Jason L. Henry, P.E. (804) 786 5975 (Central Office)
SUBSURFACE UTILITY BY, DATE Walter D. Freeman, L.S. (757) 925-1608 (Hampton Roads), 9/9/11

REVISED	STATE	STATE ROUTE	STATE PROJECT	SHEET NO.
	VA.	35	0035-087-112, RW201; C-501,	3

DESIGN FEATURES RELATING TO CONSTRUCTION OR TO REGULATION AND CONTROL OF TRAFFIC MAY BE SUBJECT TO CHANGE AS DEEMED NECESSARY BY THE DEPARTMENT

VDOT (Division) or Co. Name (Location), Virginia (TECHNICAL DISCIPLINE)

VDOT (Division) or Co. Name (Location), Virginia (TECHNICAL DISCIPLINE)

THESE PLANS ARE UNFINISHED AND UNAPPROVED AND ARE NOT TO BE USED FOR ANY TYPE OF CONSTRUCTION OR THE ACQUISITION OF RIGHT OF WAY.

ADDITIONAL EASEMENTS FOR UTILITY RELOCATIONS MAY BE REQUIRED BEYOND THE PROPOSED RIGHT- OF- WAY SHOWN ON THESE PLANS.

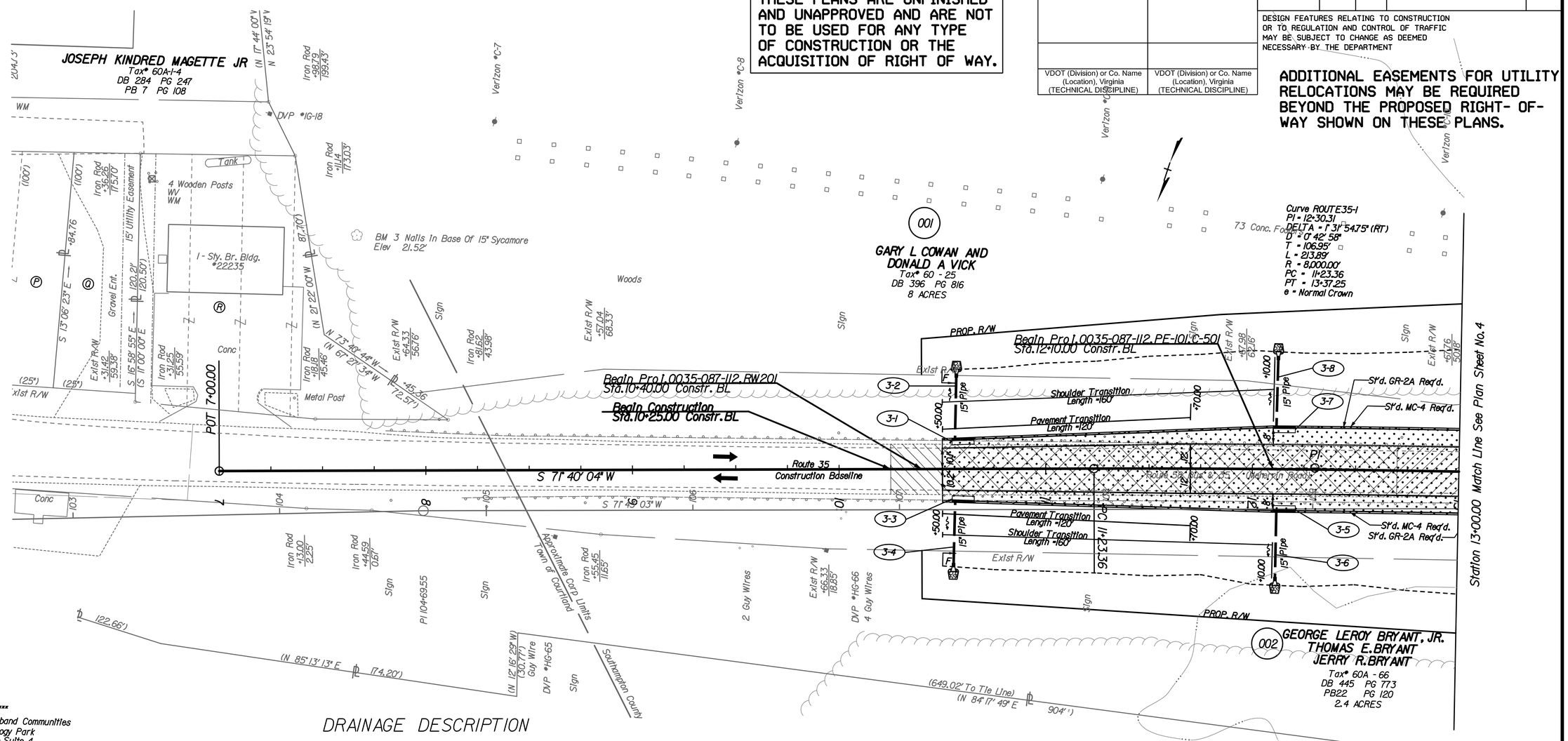

*** Utility Owners ***

Mid-Atlantic Broadband Communities
Riverstone Technology Park
1100 Conifroy Drive, Suite 4
South Boston, VA 24592
Mr. Doug Herrin
Network Operations Manager
434-570-1300

Dominion Virginia Power
Ms. Gaylene Watson
1600 Hamilton Ave.
Portsmouth VA. 23707-3528
Gaylene 757-393-3824

Verizon South Inc.
Mr. Mike Ziegler
2920 OSP Engineering - 2nd Floor
3011 Hungary Spring Road
Richmond, VA. 23322

Town Of Courtland
P. O. Box 39
Courtland, VA. 23837

Department Of Public Utilities
17287 Pittman Rd.
Boykins, VA 23827
Julien W. Johnson Jr.
Director Of Public Utilities
757-654-6024

DRAINAGE DESCRIPTION

3-1 I Std. DI-13 Type I
L=10'-8", H=2.5', Inv.=23.85
St'd. IS-1 Req'd.

3-2 35' - 15" Pipe Req'd.
Inv. (In) 23.85 Inv. (Out) 10.30
PI Method II Req'd.
Std. ES-2 End Section Req'd.
5 Tons Erosion Control Stone
EC-1 Class I Type A Installation Req'd.

3-3 I Std. DI-13 Type I
L=10'-8", H=2.5', Inv.=23.60
St'd. IS-1 Req'd.

3-4 34' - 15" Pipe Req'd.
Inv. (In) 23.60 Inv. (Out) 11.40
PI Method II Req'd.
Std. ES-2 End Section Req'd.
5 Tons Erosion Control Stone
EC-1 Class I Type A Installation Req'd.

3-5 I Std. DI-13 Type I
L=10'-8", H=2.5', Inv.=24.45
St'd. IS-1 Req'd.

3-6 37' - 15" Pipe Req'd.
Inv. (In) 24.45 Inv. (Out) 9.85
PI Method II Req'd.
Std. ES-2 End Section Req'd.
5 Tons Erosion Control Stone
EC-1 Class I Type A Installation Req'd.

3-7 I Std. DI-13 Type I
L=10'-8", H=2.5', Inv.=24.45
St'd. IS-1 Req'd.

3-8 37' - 15" Pipe Req'd.
Inv. (In) 24.45 Inv. (Out) 9.50
PI Method II Req'd.
Std. ES-2 End Section Req'd.
5 Tons Erosion Control Stone
EC-1 Class I Type A Installation Req'd.

Denotes Mill and Replace Pavement
Denotes Proposed Pavement
Denotes area of demolition of pavement
Denotes Proposed 2" Mill

Note: Figures in parenthesis and dot - dot - dashed lines denote Temporary Easements.

Note: Figures in brackets and dot - dashed lines denote Permanent Easements.

C..... Denotes Construction Limits In Cuts
F_ _ _ Denotes Construction Limits In Fills

SCALE
0 25' 50'

REFERENCES (PROFILES, DETAIL & DRAINAGE DESCRIPTION SHEETS, ETC.)	
Mainline Profile	3A
Property Owner	1E(1)

PROJECT	SHEET NO.
0035-087-112	3

PROJECT MANAGER John G. Harman, P.E. (757) 925-2308 (Hampton Roads)
SURVEYED BY, DATE Walter D. Freeman, L.S. (757) 925-1608 (Hampton Roads), 9/8/11
DESIGN SUPERVISED BY Jason L. Henry P.E. (804) 786-5975
SUBSURFACE UTILITY BY, DATE Walter D. Freeman, L.S. (757) 925-1608 (Hampton Roads), 9/9/11

1"=5'
1"=25'
Scale

REVISED	STATE	STATE ROUTE	STATE PROJECT	SHEET NO.
	VA.	035	0035-087-112, RW201, C-501	3A

DESIGN FEATURES RELATING TO CONSTRUCTION OR TO REGULATION AND CONTROL OF TRAFFIC MAY BE SUBJECT TO CHANGE AS DEEMED NECESSARY BY THE DEPARTMENT

VDOT (Division) or Co. Name (Location), Virginia (TECHNICAL DISCIPLINE)

Vertical Datum Based On NAVD88

THESE PLANS ARE UNFINISHED AND UNAPPROVED AND ARE NOT TO BE USED FOR ANY TYPE OF CONSTRUCTION OR THE ACQUISITION OF RIGHT OF WAY.

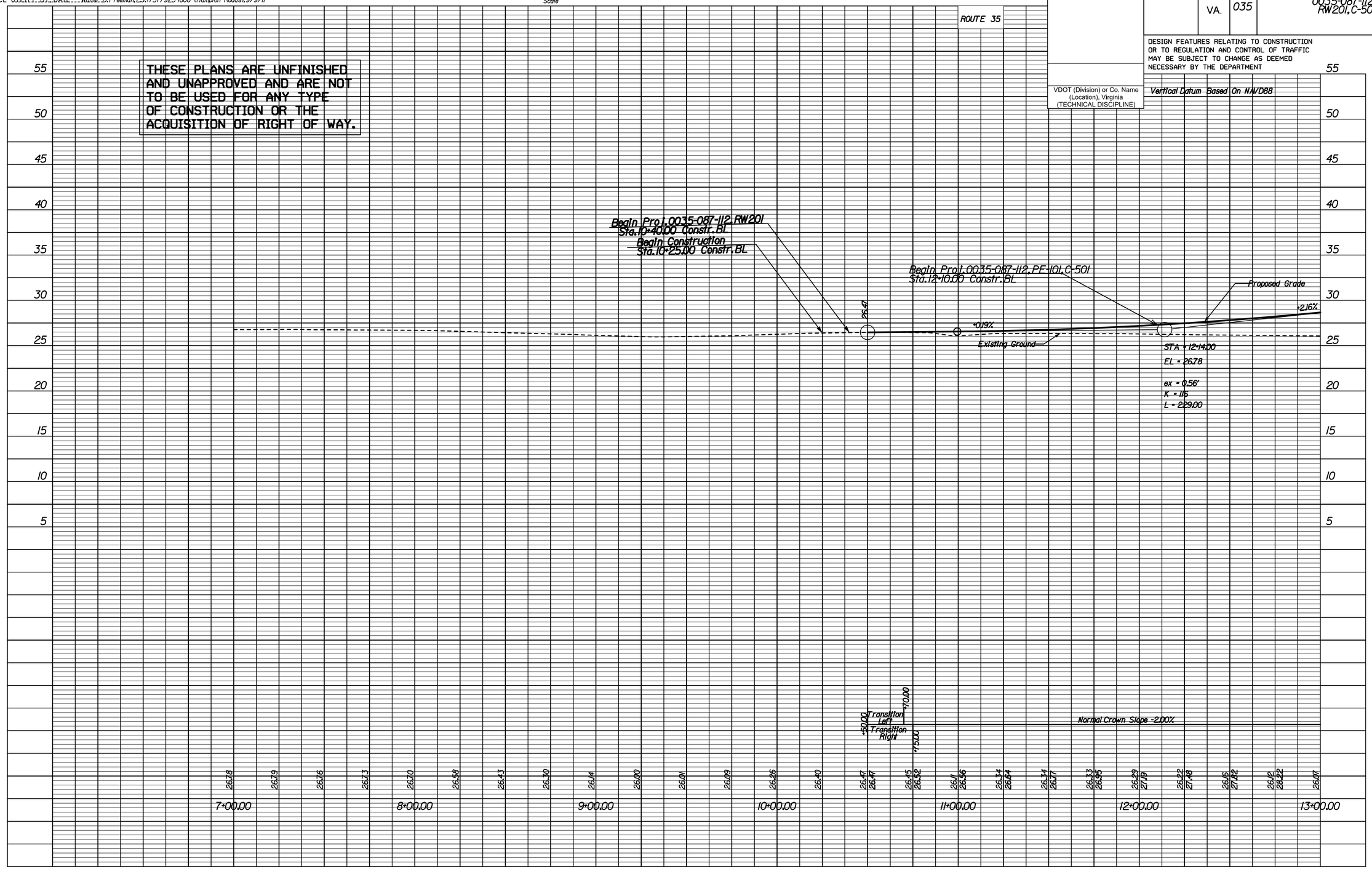

PROJECT	SHEET NO.
0035-087-112	3A

PROJECT MANAGER John G. Harman, P.E. (757) 925-2308 (Hampton Roads)
SURVEYED BY, DATE Walter D. Freeman, L.S. (757) 925-1608 (Hampton Roads), 9/8/11
DESIGN SUPERVISED BY Jason L. Henry, P.E. (804) 786 5975 (Central Office)
SUBSURFACE UTILITY BY, DATE Walter D. Freeman, L.S. (757) 925-1608 (Hampton Roads), 9/9/11

REVISED	STATE	STATE ROUTE	STATE PROJECT	SHEET NO
	VA.	35	0035-087-112, RW201; B-604, C-501.	4

DESIGN FEATURES RELATING TO CONSTRUCTION OR TO REGULATION AND CONTROL OF TRAFFIC MAY BE SUBJECT TO CHANGE AS DEEMED NECESSARY BY THE DEPARTMENT

VDOT (Division) or Co. Name (Location), Virginia (TECHNICAL DISCIPLINE)	VDOT (Division) or Co. Name (Location), Virginia (TECHNICAL DISCIPLINE)

THESE PLANS ARE UNFINISHED AND UNAPPROVED AND ARE NOT TO BE USED FOR ANY TYPE OF CONSTRUCTION OR THE ACQUISITION OF RIGHT OF WAY.

ADDITIONAL EASEMENTS FOR UTILITY RELOCATIONS MAY BE REQUIRED BEYOND THE PROPOSED RIGHT- OF- WAY SHOWN ON THESE PLANS.

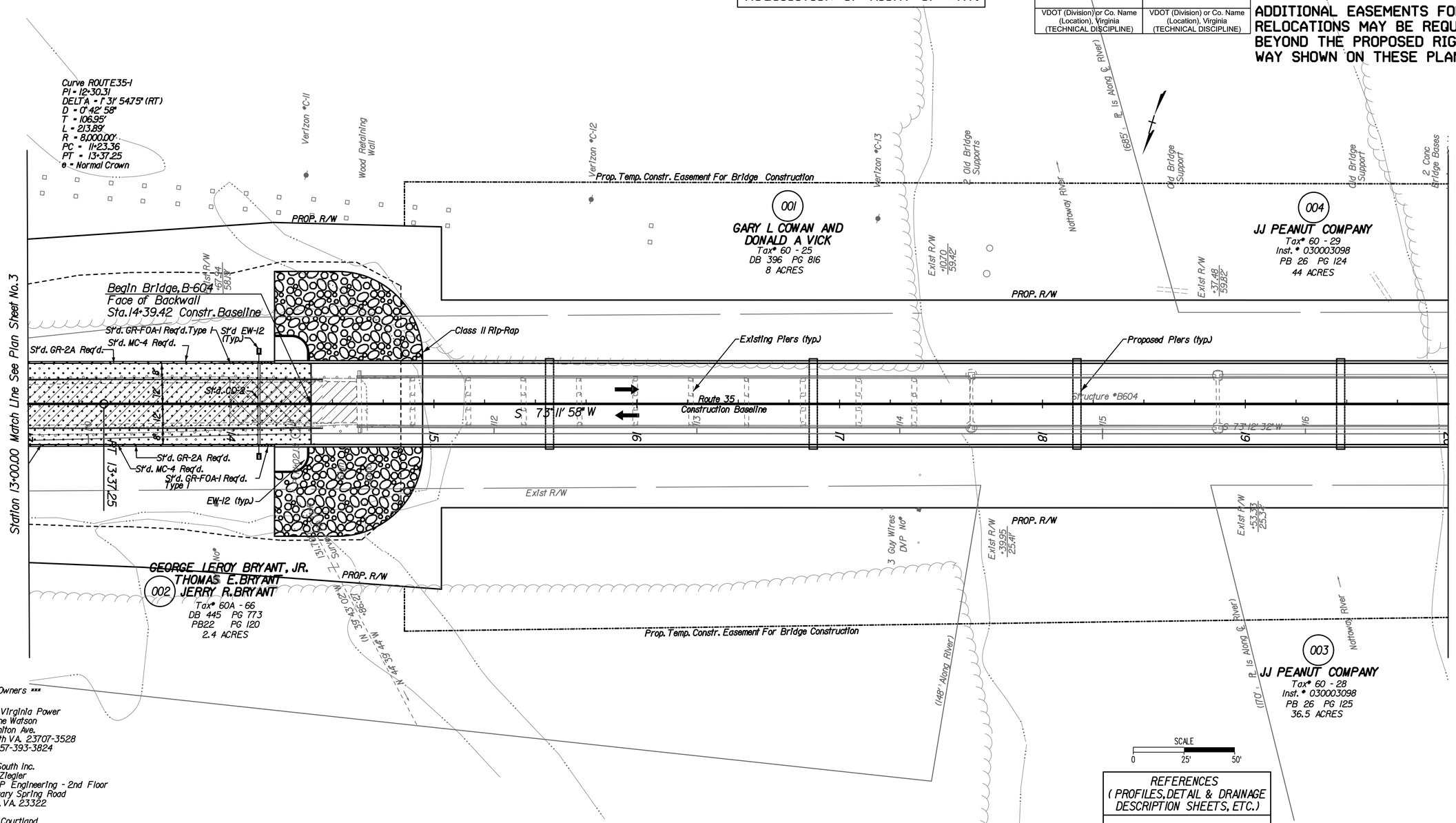

*** Utility Owners ***

Dominion Virginia Power
Ms. Gaylene Watson
1600 Hamilton Ave.
Portsmouth VA. 23707-3528
Gaylene 757-393-3824

Verizon South Inc.
Mr. Mike Ziegler
2920 OSP Engineering - 2nd Floor
3011 Hungary Spring Road
Richmond, VA. 23322

Town Of Courtland
P. O. Box 39
Courtland, VA. 23837

Department Of Public Utilities
17287 Pittman Rd.
Boykins, VA 23827
Julien W. Johnson Jr.
Director Of Public Utilities
757-654-6024

Denotes Proposed Pavement

Denotes area of demolition of pavement

Denotes Proposed 2" Mill

Note : Figures in parenthesis and dot - dot - dashed lines denote Temporary Easements.

Note : Figures in brackets and dot - dashed lines denote Permanent Easements.

C_____ Denotes Construction Limits in Cuts

F_____ Denotes Construction Limits in Fills

REFERENCES
(PROFILES, DETAIL & DRAINAGE DESCRIPTION SHEETS, ETC.)

Mainline Profile 4A

PROJECT	SHEET NO.
0035-087-112	4

PROJECT MANAGER John G. Harman, P.E. (757) 925-2308 (Hampton Roads)
SURVEYED BY, DATE Walter D. Freeman, L.S. (757) 925-1608 (Hampton Roads), 9/8/11
DESIGN SUPERVISED BY Jason L. Henry, P.E. (804) 786-5975
SUBSURFACE UTILITY BY, DATE Walter D. Freeman, L.S. (757) 925-1608 (Hampton Roads), 9/9/11

1"=5'
1"=25'
Scale

REVISED	STATE	STATE ROUTE	STATE PROJECT	SHEET NO.
	VA.	035	0035-087-112 RW 201, C-501	4A

DESIGN FEATURES RELATING TO CONSTRUCTION OR TO REGULATION AND CONTROL OF TRAFFIC MAY BE SUBJECT TO CHANGE AS DEEMED NECESSARY BY THE DEPARTMENT

VDOT (Division) or Co. Name
(Location), Virginia
(TECHNICAL DISCIPLINE)

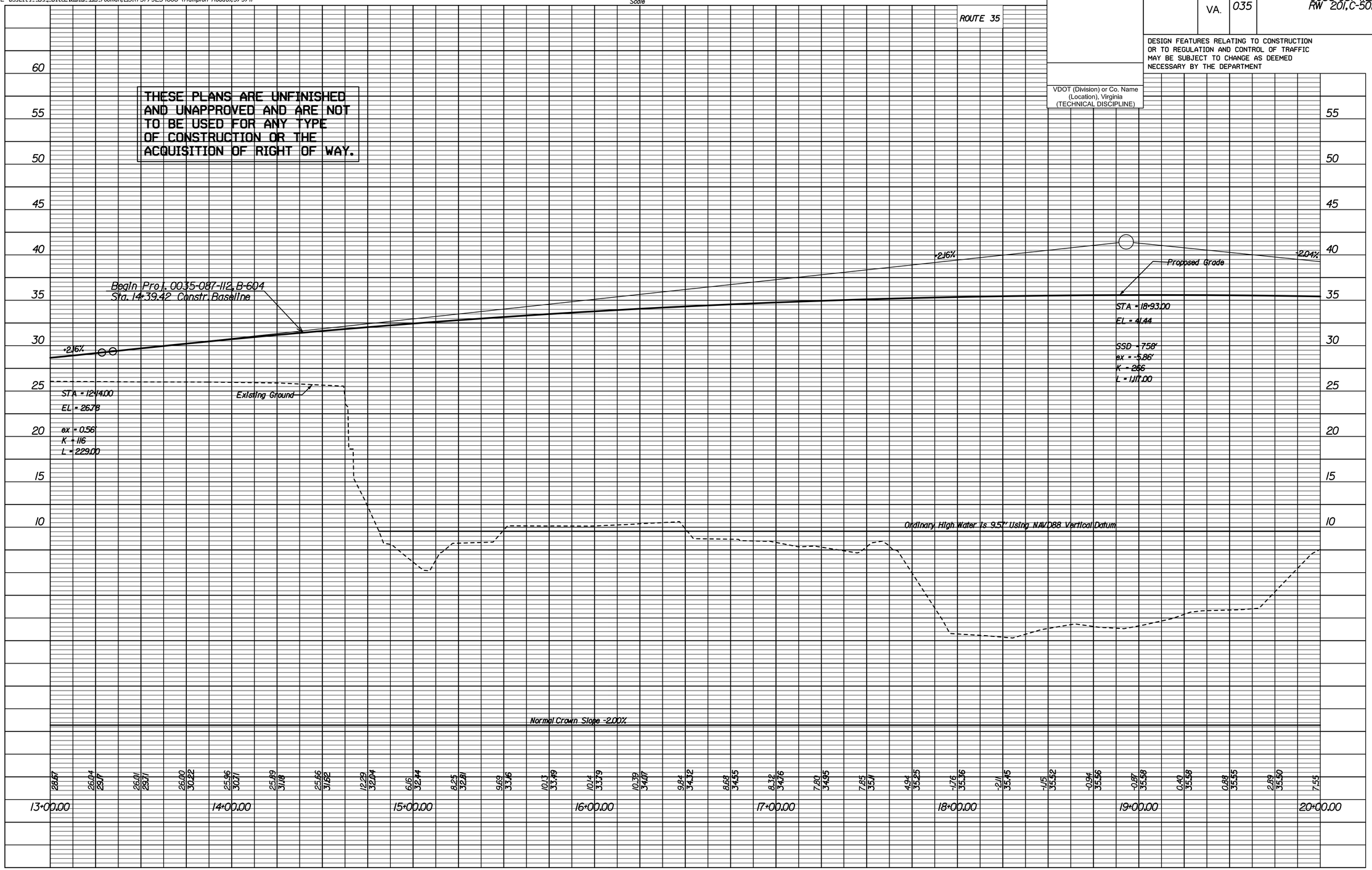

PROJECT	SHEET NO.
0035-087-112	4A

PROJECT MANAGER Jobo G. Harman, P.E. (757) 925-2308 (Hampton Roads)
SURVEYED BY, DATE Walter D. Freeman, L.S. (757) 925-1608 (Hampton Roads), 9/8/11
DESIGN SUPERVISED BY Jason L. Henry, P.E. (804) 786 5975 (Central Office)
SUBSURFACE UTILITY BY, DATE Walter D. Freeman, L.S. (757) 925-1608 (Hampton Roads), 9/9/11

REVISED	STATE	STATE ROUTE	STATE PROJECT	SHEET NO.
	VA.	35	0035-087-112, RW201; B-604, C-501.	5

DESIGN FEATURES RELATING TO CONSTRUCTION OR TO REGULATION AND CONTROL OF TRAFFIC MAY BE SUBJECT TO CHANGE AS DEEMED NECESSARY BY THE DEPARTMENT

VDOT (Division) or Co. Name (Location), Virginia (TECHNICAL DISCIPLINE)	VDOT (Division) or Co. Name (Location), Virginia (TECHNICAL DISCIPLINE)

THESE PLANS ARE UNFINISHED AND UNAPPROVED AND ARE NOT TO BE USED FOR ANY TYPE OF CONSTRUCTION OR THE ACQUISITION OF RIGHT OF WAY.

ADDITIONAL EASEMENTS FOR UTILITY RELOCATIONS MAY BE REQUIRED BEYOND THE PROPOSED RIGHT- OF- WAY SHOWN ON THESE PLANS.

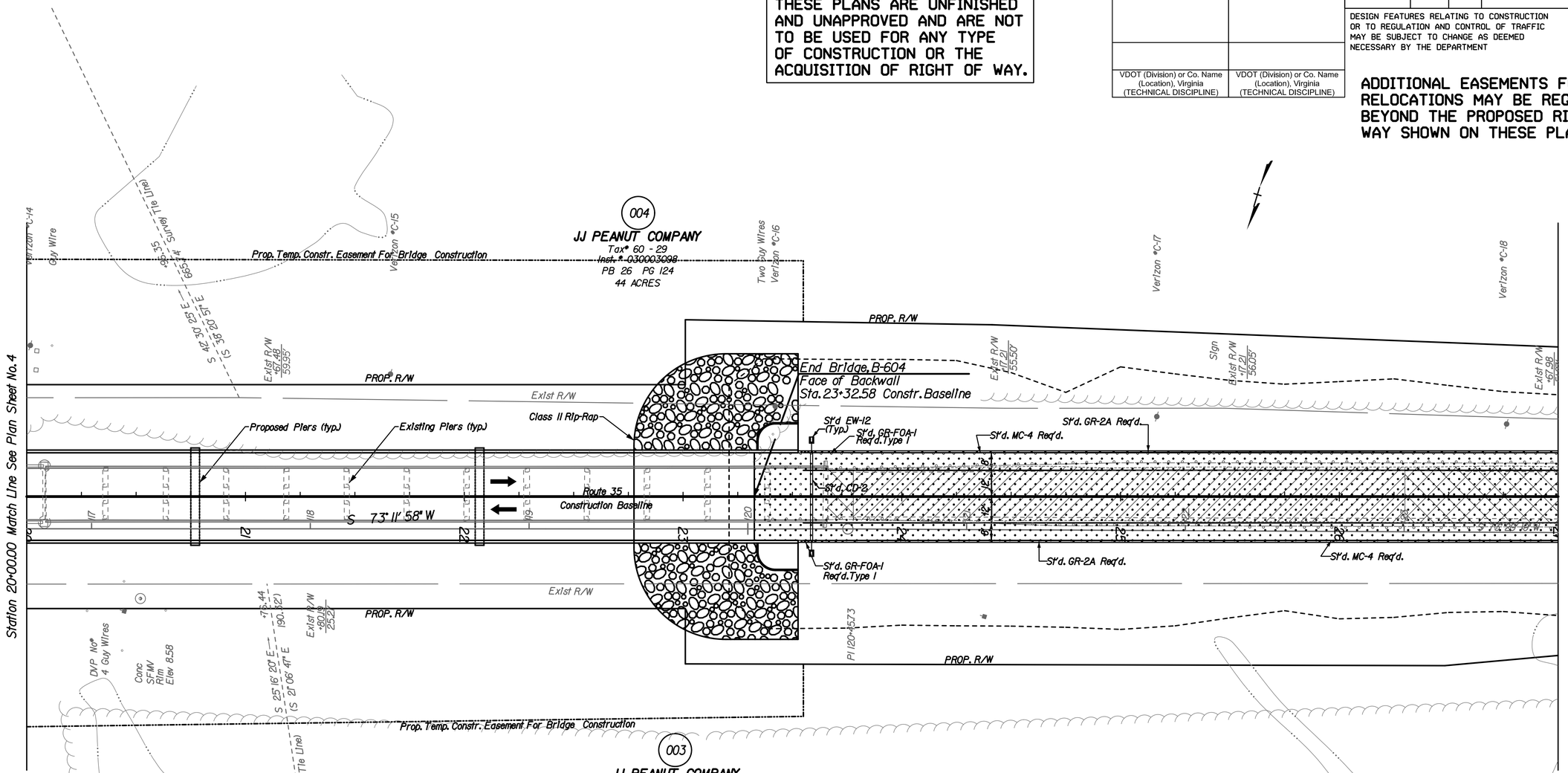

*** Utility Owners ***

Dominion Virginia Power
Ms. Gaylene Watson
1600 Hamilton Ave.
Portsmouth VA. 23707-3528
Gaylene 757-393-3824

Verizon South Inc.
Mr. Mike Ziegler
2920 OSP Engineering :- 2nd Floor
3011 Hungary Spring Road
Richmond, VA. 23322

Town Of Courtland
P. O. Box 39
Courtland, VA. 23837

Department Of Public Utilities
17287 Pittman Rd.
Boykins, VA 23827
Julien W. Johnson Jr.
Director Of Public Utilities
757-654-6024

Denotes Proposed Pavement

Denotes area of demolition of pavement

Denotes Proposed 2" Mill

Note : Figures in parenthesis and dot - dot - dashed lines denote Temporary Easements.

Note : Figures in brackets and dot - dashed lines denote Permanent Easements.

C..... Denotes Construction Limits in Cuts

F_ _ _ Denotes Construction Limits in Fills

SCALE
0 25' 50'

REFERENCES (PROFILES, DETAIL & DRAINAGE DESCRIPTION SHEETS, ETC.)	
Mainline Profile	5A

PROJECT	SHEET NO.
0035-087-112	5

PROJECT MANAGER John G. Harman, P.E. (757) 925-2308 (Hampton Roads)
SURVEYED BY, DATE Walter D. Freeman, L.S. (757) 925-1608 (Hampton Roads), 9/8/11
DESIGN SUPERVISED BY Jason L. Henry, P.E. (804) 786-5975
SUBSURFACE UTILITY BY, DATE Walter D. Freeman, L.S. (757) 925-1608 (Hampton Roads), 9/9/11

1"=5'
1"=25'
Scale

REVISED	STATE	STATE ROUTE	STATE PROJECT	SHEET NO.
	VA.	035	0035-087-112 RW 201, C-501,	5A

DESIGN FEATURES RELATING TO CONSTRUCTION OR TO REGULATION AND CONTROL OF TRAFFIC MAY BE SUBJECT TO CHANGE AS DEEMED NECESSARY BY THE DEPARTMENT

VDOT (Division) or Co. Name
(Location), Virginia
(TECHNICAL DISCIPLINE)

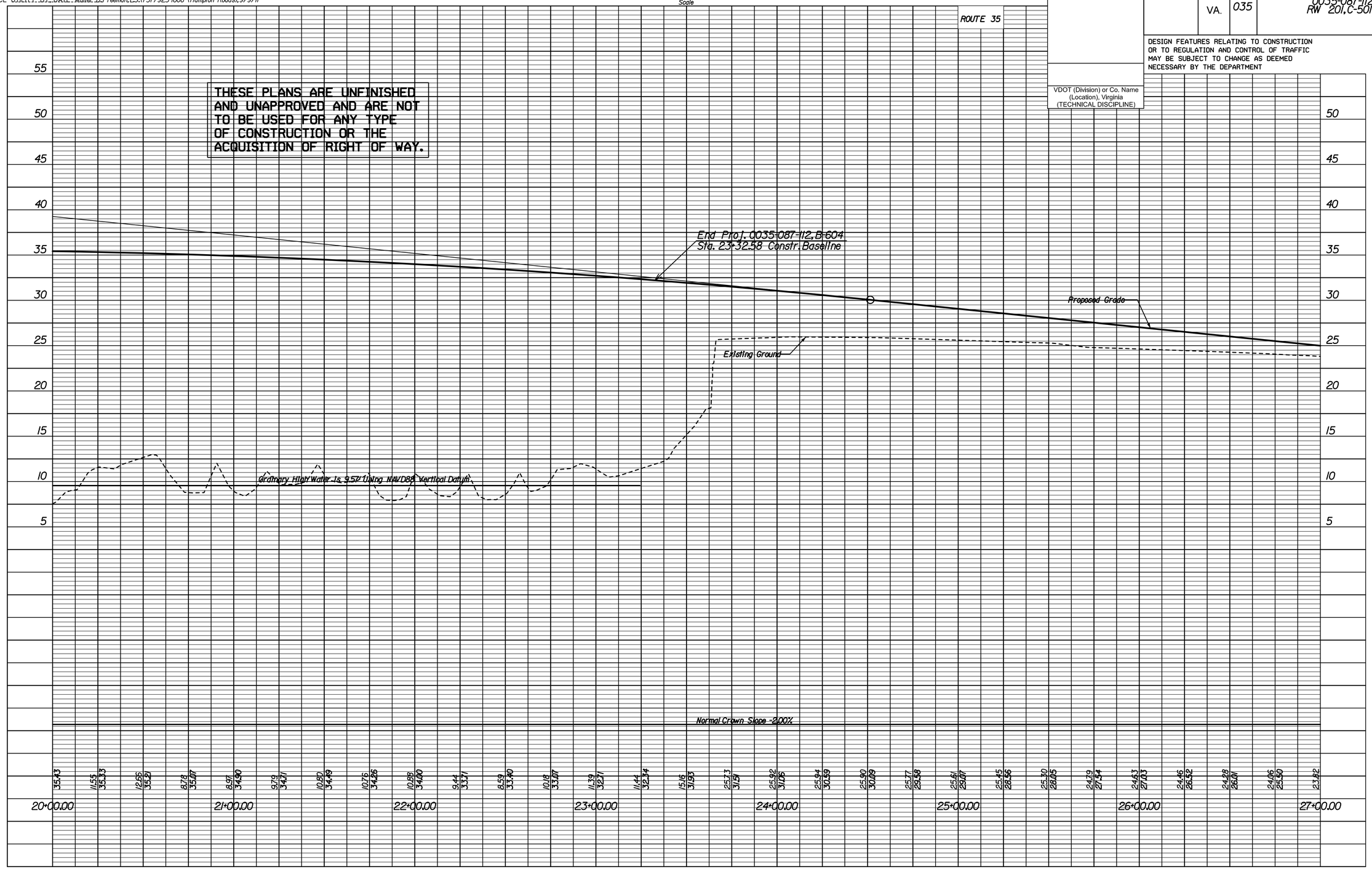

PROJECT	SHEET NO.
0035-087-112	5A

PROJECT MANAGER Jobo G. Harman, P.E. (757) 925-2308 (Hampton Roads)
SURVEYED BY, DATE Walter D. Freeman, L.S. (757) 925-1608 (Hampton Roads), 9/8/11
DESIGN SUPERVISED BY Jason L. Henry, P.E. (804) 786 5975 (Central Office)
SUBSURFACE UTILITY BY, DATE Walter D. Freeman, L.S. (757) 925-1608 (Hampton Roads), 9/9/11

REVISED	STATE	STATE ROUTE	STATE PROJECT	SHEET NO.
	VA.	35	0035-087-112, RW201; PE-101, C-501,	6

VDOT (Division) or Co. Name (Location), Virginia (TECHNICAL DISCIPLINE)

VDOT (Division) or Co. Name (Location), Virginia (TECHNICAL DISCIPLINE)

DESIGN FEATURES RELATING TO CONSTRUCTION OR TO REGULATION AND CONTROL OF TRAFFIC MAY BE SUBJECT TO CHANGE AS DEEMED NECESSARY BY THE DEPARTMENT

THESE PLANS ARE UNFINISHED AND UNAPPROVED AND ARE NOT TO BE USED FOR ANY TYPE OF CONSTRUCTION OR THE ACQUISITION OF RIGHT OF WAY.

ADDITIONAL EASEMENTS FOR UTILITY RELOCATIONS MAY BE REQUIRED BEYOND THE PROPOSED RIGHT- OF- WAY SHOWN ON THESE PLANS.

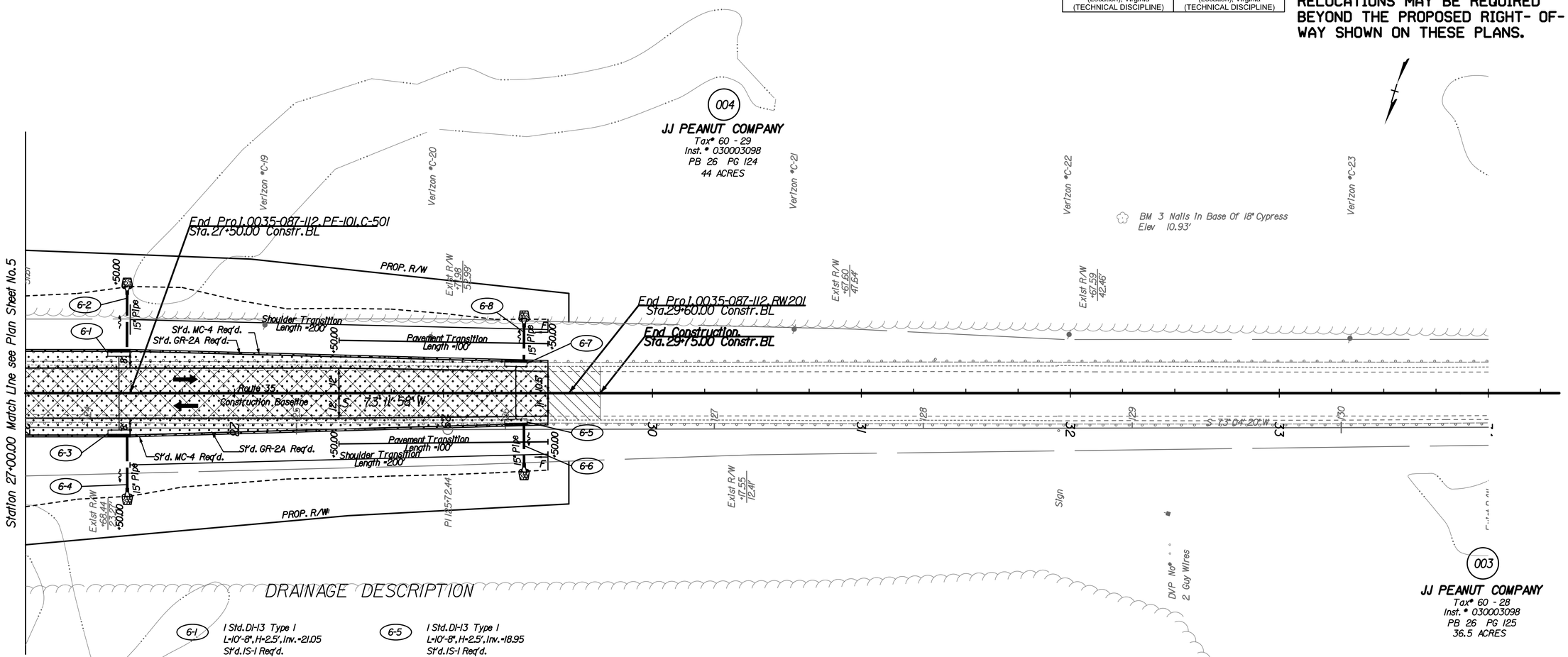

DRAINAGE DESCRIPTION

6-1 I Std. DI-13 Type I
L=10'-8", H=2.5', Inv.=21.05
St'd. IS-1 Req'd.

6-2 31' - 15" Pipe Req'd.
Inv. (In) 21.05 Inv. (Out) 9.20
PI Method II Req'd.
Std. ES-2 End Section Req'd.
5 Tons Erosion Control Stone
EC-1 Class I Type A Installation Req'd.

6-3 I Std. DI-13 Type I
L=10'-8", H=2.5', Inv.=21.05
St'd. IS-1 Req'd.

6-4 29' - 15" Pipe Req'd.
Inv. (In) 21.05 Inv. (Out) 10.00
PI Method II Req'd.
Std. ES-2 End Section Req'd.
5 Tons Erosion Control Stone
EC-1 Class I Type A Installation Req'd.

6-5 I Std. DI-13 Type I
L=10'-8", H=2.5', Inv.=18.95
St'd. IS-1 Req'd.

6-6 22' - 15" Pipe Req'd.
Inv. (In) 18.95 Inv. (Out) 12.20
PI Method II Req'd.
Std. ES-2 End Section Req'd.
5 Tons Erosion Control Stone
EC-1 Class I Type A Installation Req'd.

6-7 I Std. DI-13 Type I
L=10'-8", H=2.5', Inv.=18.95
St'd. IS-1 Req'd.

6-8 20' - 15" Pipe Req'd.
Inv. (In) 18.95 Inv. (Out) 11.10
PI Method II Req'd.
Std. ES-2 End Section Req'd.
5 Tons Erosion Control Stone
EC-1 Class I Type A Installation Req'd.

*** Utility Owners ***

Dominion Virginia Power
Ms. Gaylene Watson
1600 Hamilton Ave.
Portsmouth VA. 23707-3528
Gaylene 757-393-3824

Verizon South Inc.
Mr. Mike Ziegler
2920 OSP Engineering - 2nd Floor
3011 Hungary Spring Road
Richmond, VA. 23322

Town Of Courtland
P. O. Box 39
Courtland, VA. 23837

Department Of Public Utilities
17287 Pittman Rd.
Boykins, VA 23827
Julien W. Johnson Jr.
Director Of Public Utilities
757-654-6024

Denotes Mill and Replace Pavement

Denotes Proposed Pavement

Denotes area of demolition of pavement

Note : Figures in parenthesis and dot - dot - dashed lines denote Temporary Easements.

Note : Figures in brackets and dot - dashed lines denote Permanent Easements.

C..... Denotes Construction Limits In Cuts

F_ _ _ Denotes Construction Limits In Fills

SCALE
0 25' 50'

REFERENCES
(PROFILES, DETAIL & DRAINAGE DESCRIPTION SHEETS, ETC.)

Mainline Profile 6A

PROJECT	SHEET NO.
0035-087-112	6

PROJECT MANAGER John G. Harman, P.E. (757) 925-2308 (Hampton Roads)
SURVEYED BY, DATE Walter D. Freeman, L.S. (757) 925-1608 (Hampton Roads), 9/8/11
DESIGN SUPERVISED BY Jason L. Henry, P.E. (804) 786-5975
SUBSURFACE UTILITY BY, DATE Walter D. Freeman, L.S. (757) 925-1608 (Hampton Roads), 9/9/11

REVISED	STATE	STATE ROUTE	STATE PROJECT	SHEET NO.
	VA.	035	0035-087-112, RW 201, C-501	6A

DESIGN FEATURES RELATING TO CONSTRUCTION OR TO REGULATION AND CONTROL OF TRAFFIC MAY BE SUBJECT TO CHANGE AS DEEMED NECESSARY BY THE DEPARTMENT

VDOT (Division) or Co. Name
(Location), Virginia
(TECHNICAL DISCIPLINE)

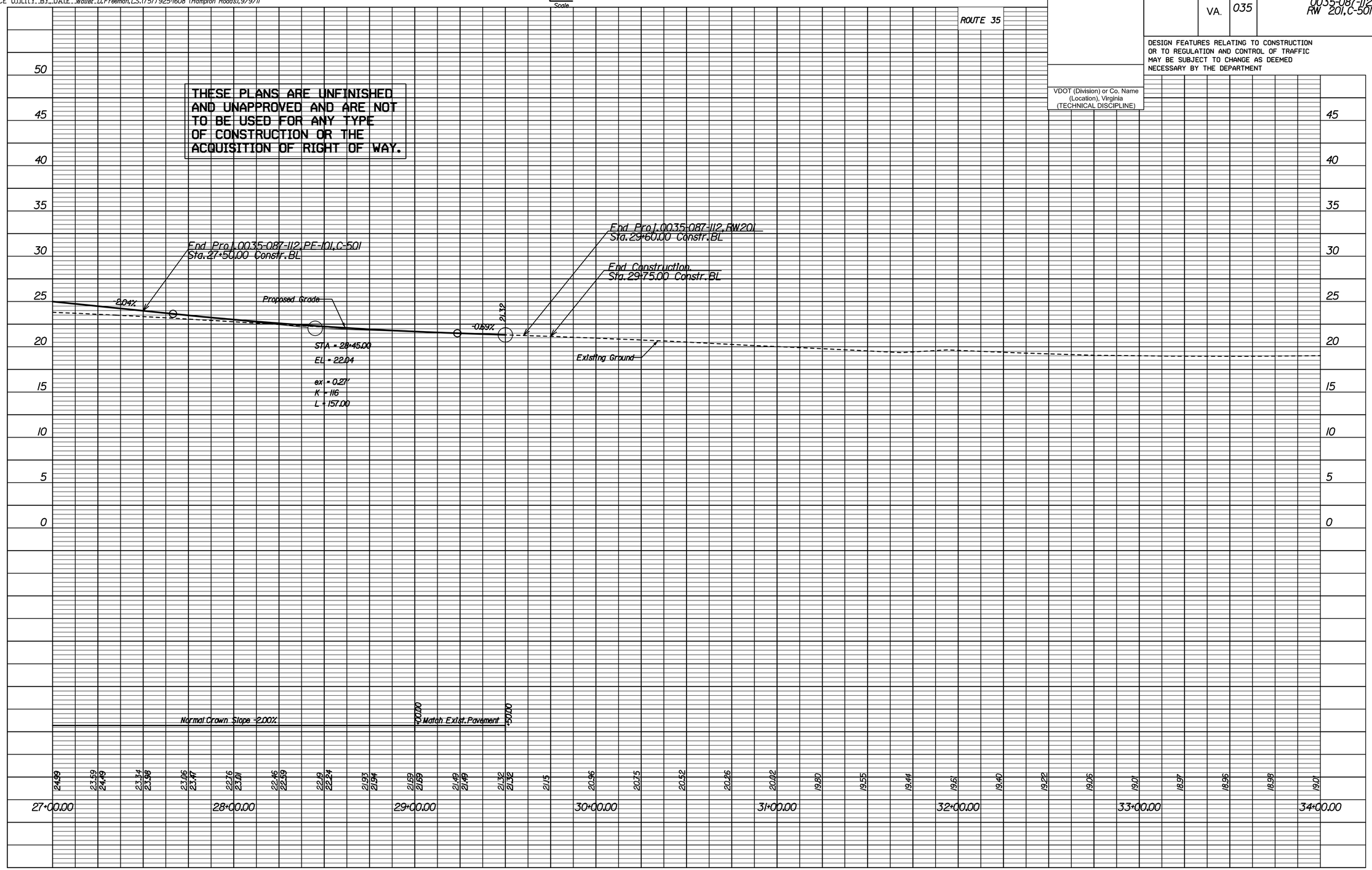

PROJECT	SHEET NO.
0035-087-112	6A

Virginia Department of Transportation

Section 4.2.8
Conceptual Bridge Plans

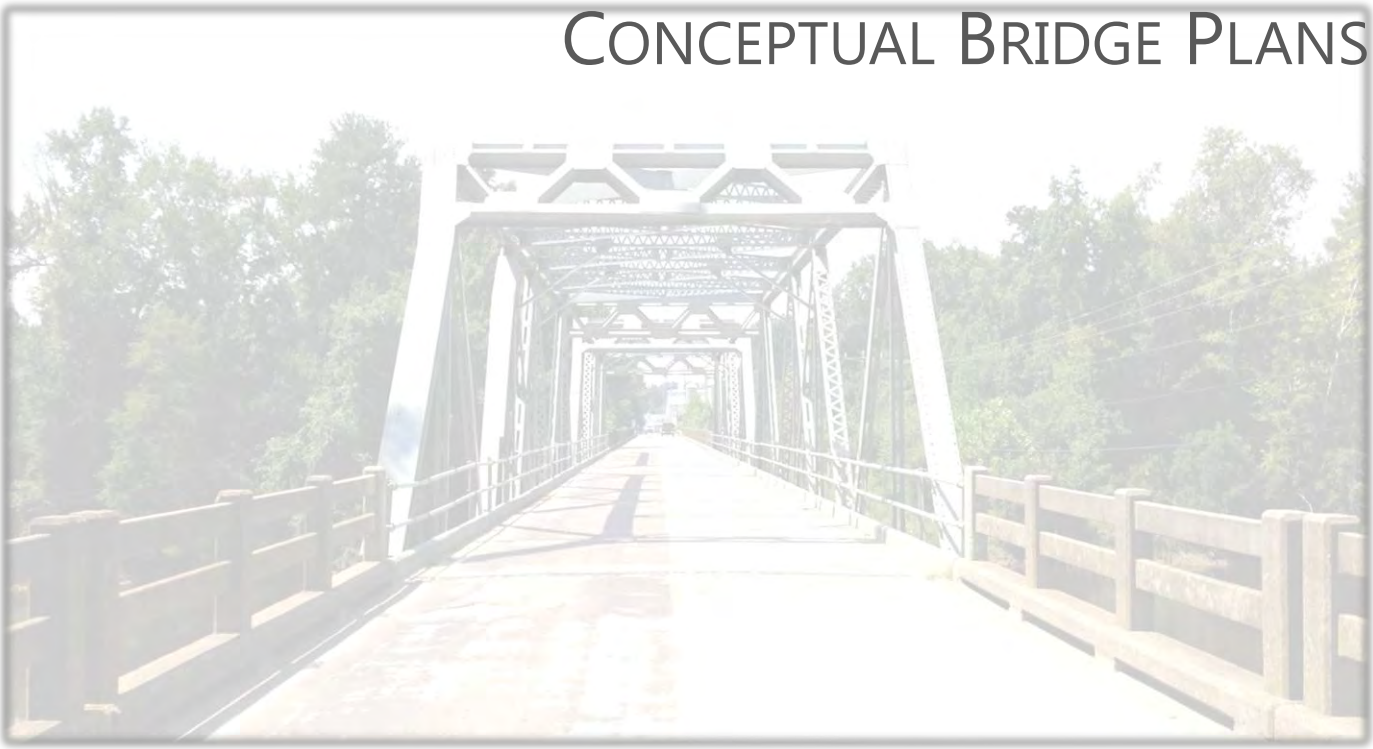

WAGMAN

Bridging Generations · Since 1902

STATE	FEDERAL AID ROUTE	FEDERAL AID PROJECT	STATE ROUTE	STATE PROJECT	SHEET NO.
VA.	—		35	0035-087-112, B604	1
NBIS Number:			UPC No. 81457		
Federal Oversight Code:			FHWA Construction and Scour Code:		

DESIGN EXCEPTION(S):

GENERAL NOTES:

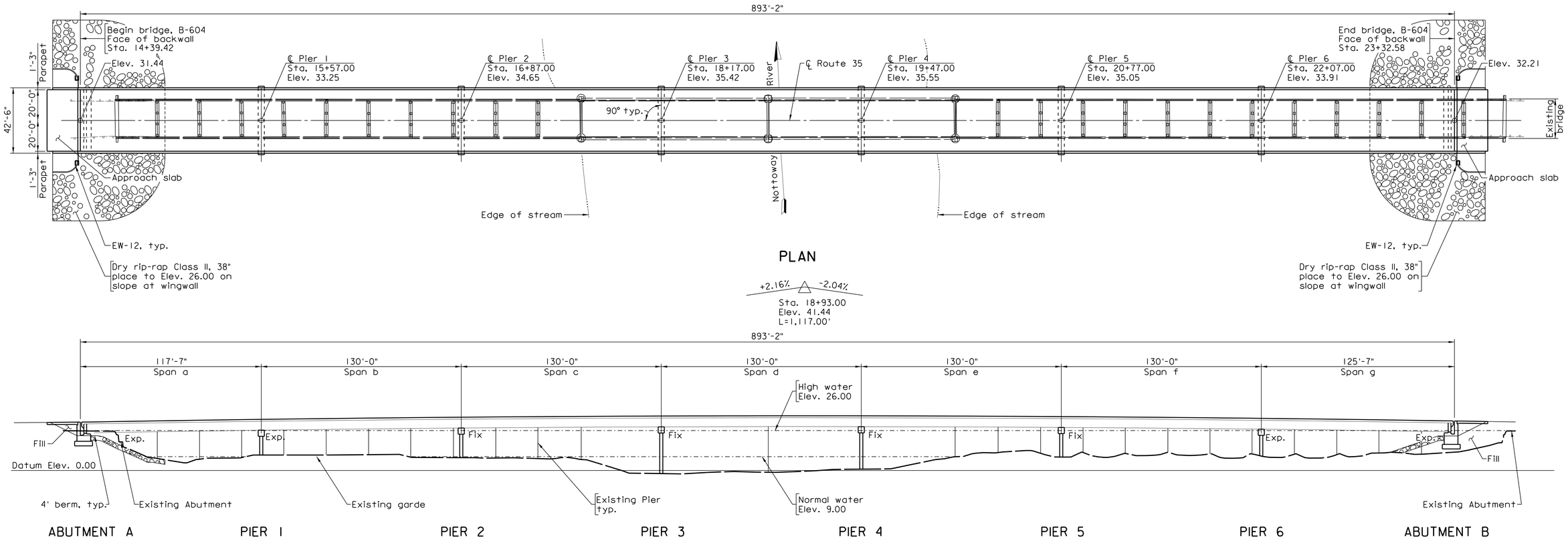

PLAN

DEVELOPED SECTION ALONG ℄

bxxxxx001.dgn

VDOT

COMMONWEALTH OF VIRGINIA
DEPARTMENT OF TRANSPORTATION

PROPOSED BRIDGE ON
RTE. 35 OVER NOTTOWAY RIVER
COURTLAND/SOUTHHAMPTON COUNTY
0.04 MI. W. SOUTHHAMPTON COUNTY LINE
PROJ. 0035-087-112, B604

Recommended for Approval: _____ State Structure and Bridge Engineer _____ Date

Approved: _____ Chief Engineer _____ Date

JOHNSON, MIRMIRAN & THOMPSON
RICHMOND, VA
STRUCTURAL ENGINEER

PLANS BY:	Consultant
COORDINATED:	
SUPERVISED:	
DESIGNED:	
DRAWN:	Spencer R. Sloan
CHECKED:	

No.	Description	Date

REVISIONS

For Table of Revisions, see Sheet 2.

Scale: 1/32" = 1'-0"

Date: August, 2013

© 2013, Commonwealth of Virginia

031-13A

STATE	FEDERAL AID ROUTE	FEDERAL AID PROJECT	STATE ROUTE	STATE PROJECT	SHEET NO.
VA.	—		35	003-87-112, B604	2

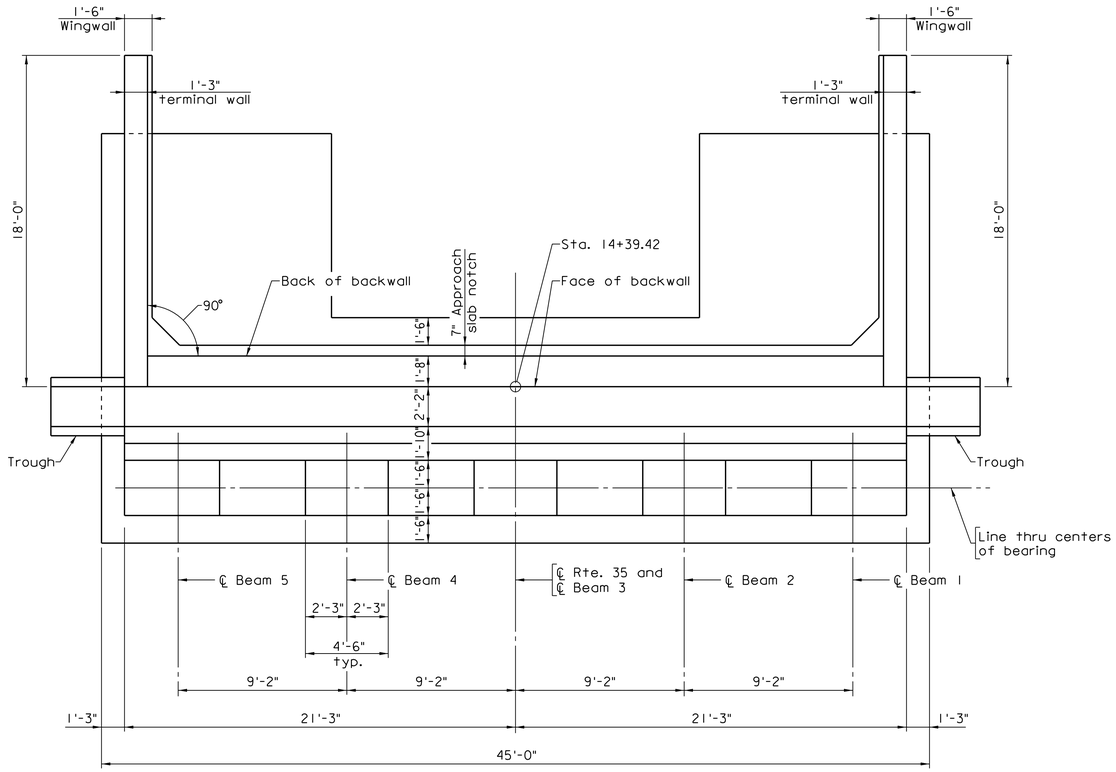

PLAN

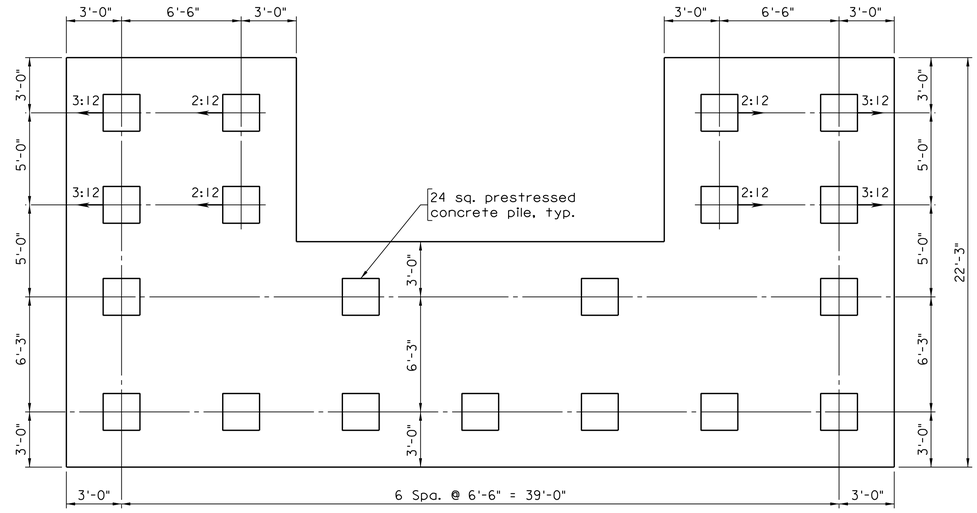

PILE PLAN

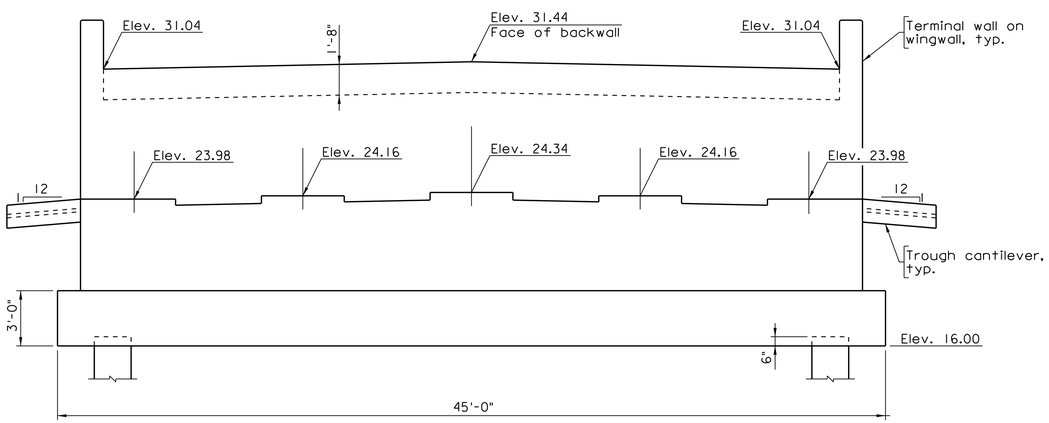

ELEVATION

Bxxxxx002.dgn

JOHNSON, MIRMIRAN & THOMPSON
RICHMOND, VA
STRUCTURAL ENGINEER

Scale: 1/4" = 1'-0"

© 2013, Commonwealth of Virginia

No.	Description	Date
	Revisions	

COMMONWEALTH OF VIRGINIA
DEPARTMENT OF TRANSPORTATION

STRUCTURE AND BRIDGE DIVISION

RTE. 35 OVER NOTTOWAY RIVER ABUTMENT A

Designed: WRA
Drawn: SRS
Checked: AAP

Date	Plan No.	Sheet No.
Aug. 2013	031-13A	2 of 7

STATE	FEDERAL AID ROUTE	FEDERAL AID PROJECT	STATE ROUTE	STATE PROJECT	SHEET NO.
VA.	—		35	003-87-112, B604	3

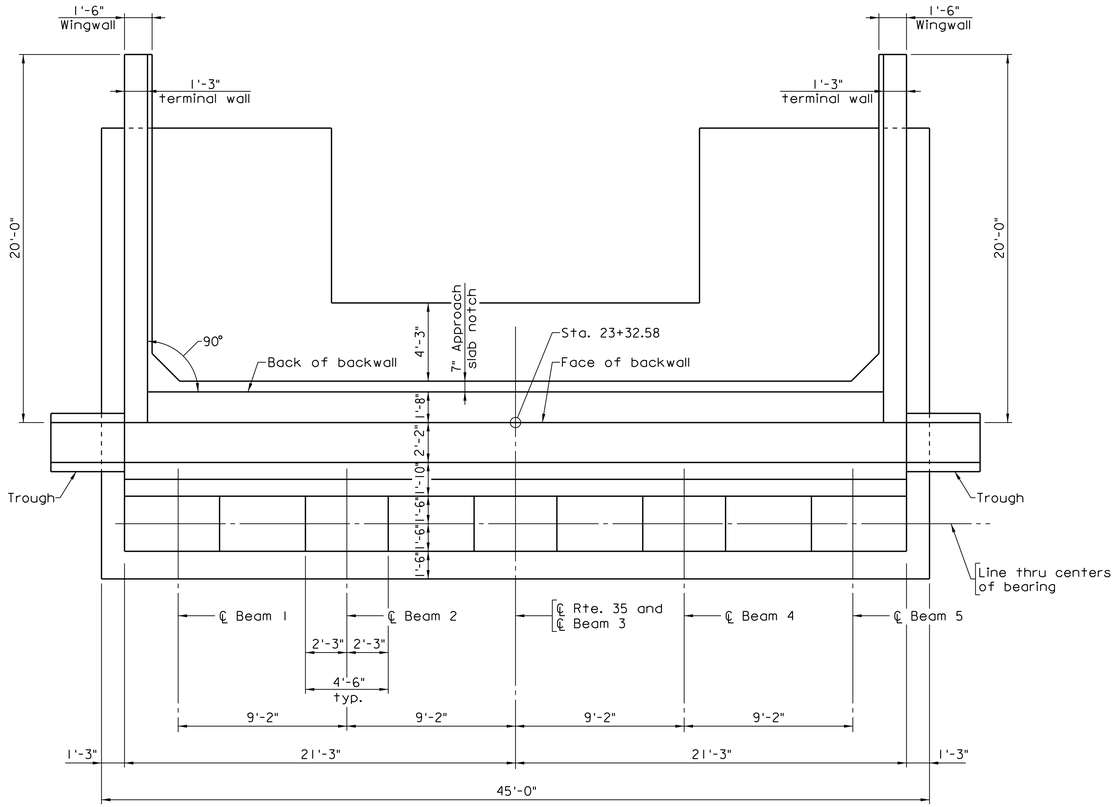

PLAN

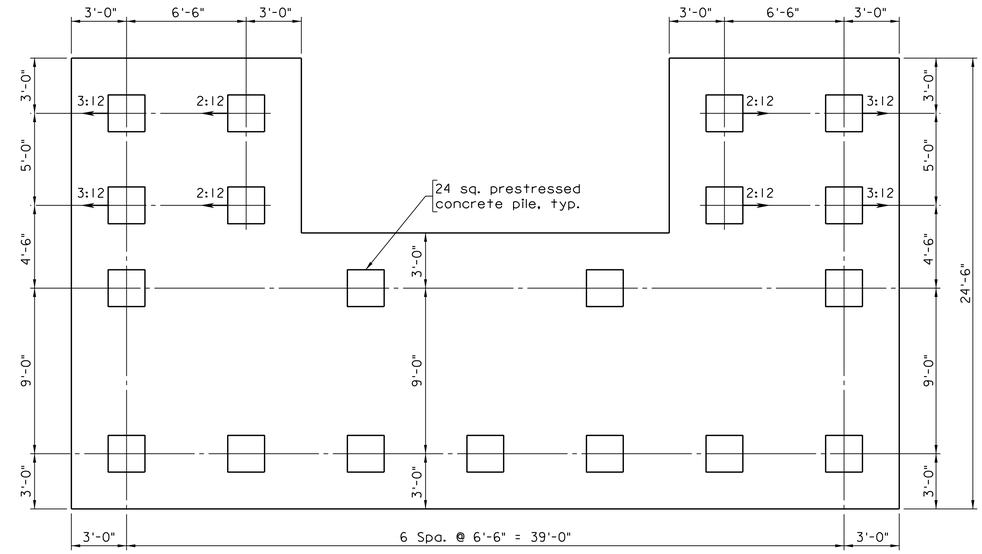

PILE PLAN

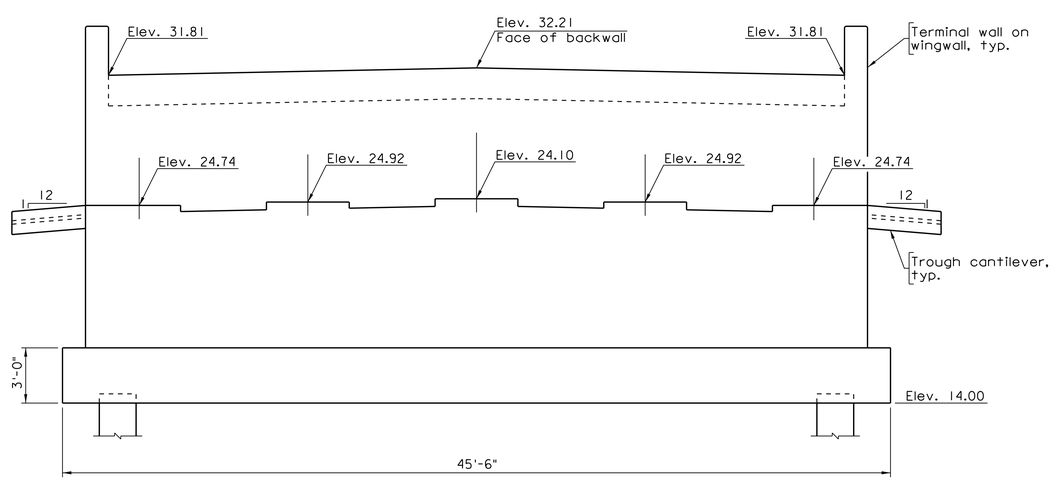

ELEVATION

Bxxxxx003.dgn

JOHNSON, MIRMIRAN & THOMPSON
RICHMOND, VA
STRUCTURAL ENGINEER

© 2013, Commonwealth of Virginia

No.	Description	Date
	Revisions	

COMMONWEALTH OF VIRGINIA
DEPARTMENT OF TRANSPORTATION

STRUCTURE AND BRIDGE DIVISION

RTE. 35 OVER NOTTOWAY RIVER
ABUTMENT B

Designed: WRA	Date	Plan No.	Sheet No.
Drawn: SRS	Aug. 2013	031-13A	3 of 7
Checked: AAP			

STATE	FEDERAL AID ROUTE	FEDERAL AID PROJECT	STATE ROUTE	STATE PROJECT	SHEET NO.
VA.	—		35	003-87-112, B604	4

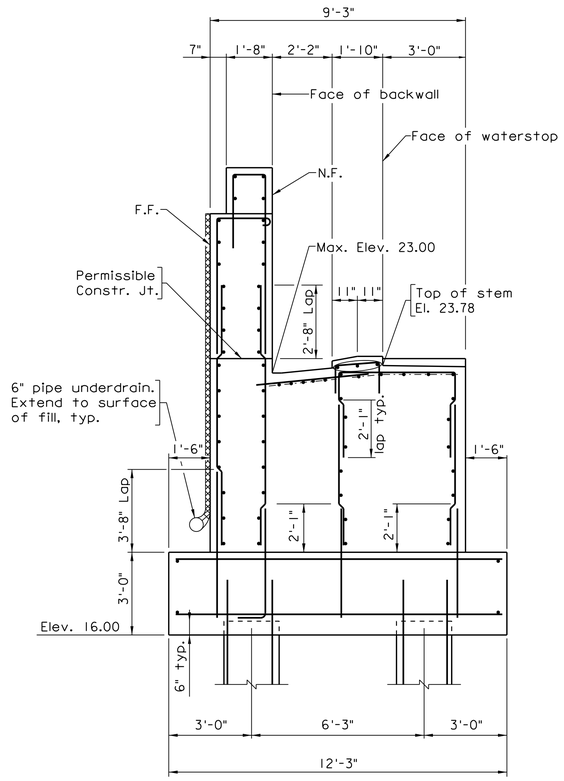

SECTION ABUTMENT A

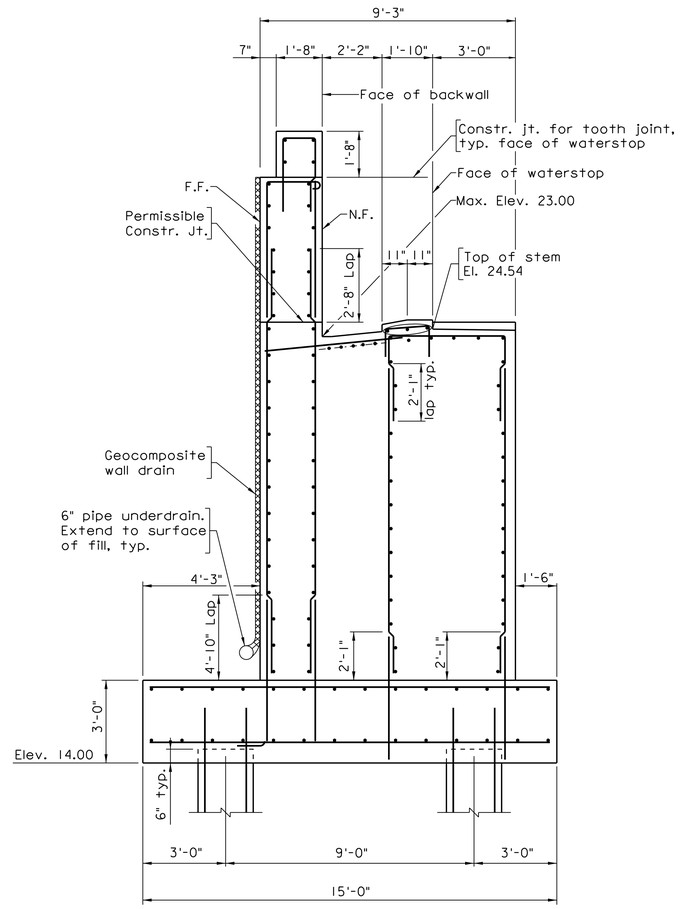

SECTION ABUTMENT B

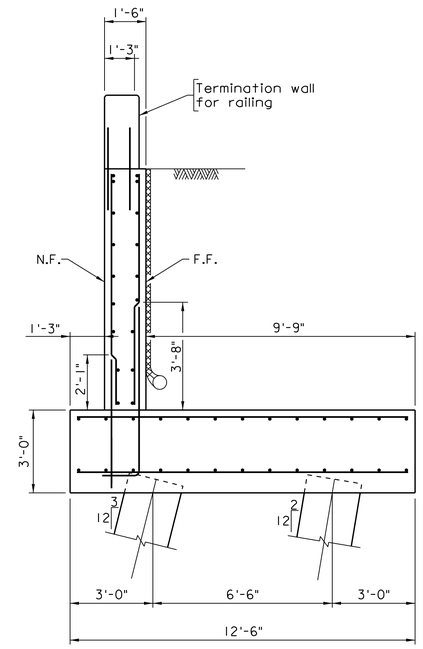

WINGWALL SECTION ABUTMENT A

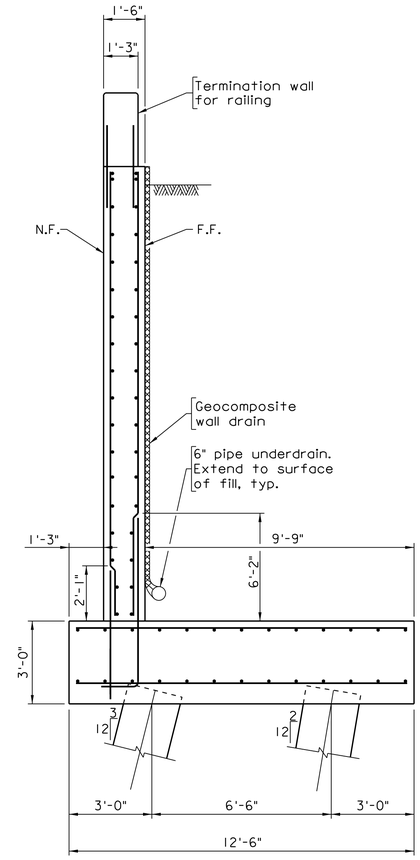

WINGWALL SECTION ABUTMENT B

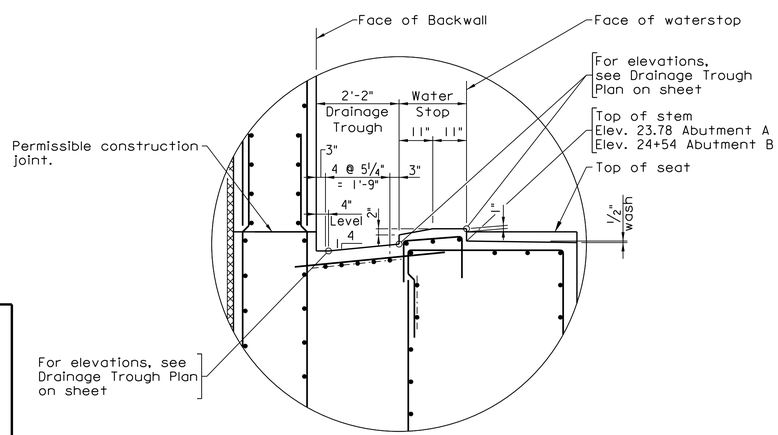

DRAINAGE TROUGH TYPICAL SECTION

Scale: ½" = 1'-0"

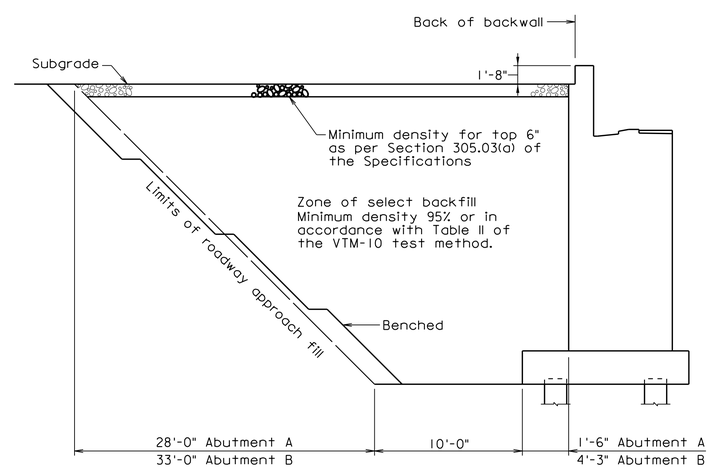

SECTION THROUGH ABUTMENT

Abutment drainage not shown

Not to scale

Scale: ⅜" = 1'-0" except as noted

© 2013, Commonwealth of Virginia

Special Note:

Excavation for Placement of select backfill shall be included in the price of the Select Material Type I.

Backfill Notes:

Material in the abutment select backfill zone shall be Select Material Type I, minimum CBR 30 and shall be compacted in accordance with Sections 303 and 305 of the Specifications.

In cut situations, material with strength characteristics greater than the select backfill may be left in place.

The final depth of the embankment side slopes shall be regular embankment material placed and finished as required.

No.	Description	Date
	Revisions	

COMMONWEALTH OF VIRGINIA
DEPARTMENT OF TRANSPORTATION

STRUCTURE AND BRIDGE DIVISION

RTE. 35 OVER NOTTOWAY RIVER ABUTMENT A - SECTIONS AND MISCELLANEOUS DETAILS

Designed: WRA Drawn: SPS Checked: AAF	Date	Plan No.	Sheet No.
	Aug. 2013	031-13A	4 of 7

JOHNSON, MIRMIRAN & THOMPSON
RICHMOND, VA
STRUCTURAL ENGINEER

Bxxxx004.dgn

STATE	FEDERAL AID ROUTE	FEDERAL AID PROJECT	STATE ROUTE	STATE PROJECT	SHEET NO.
VA.	—		35	003-87-112, B604	5

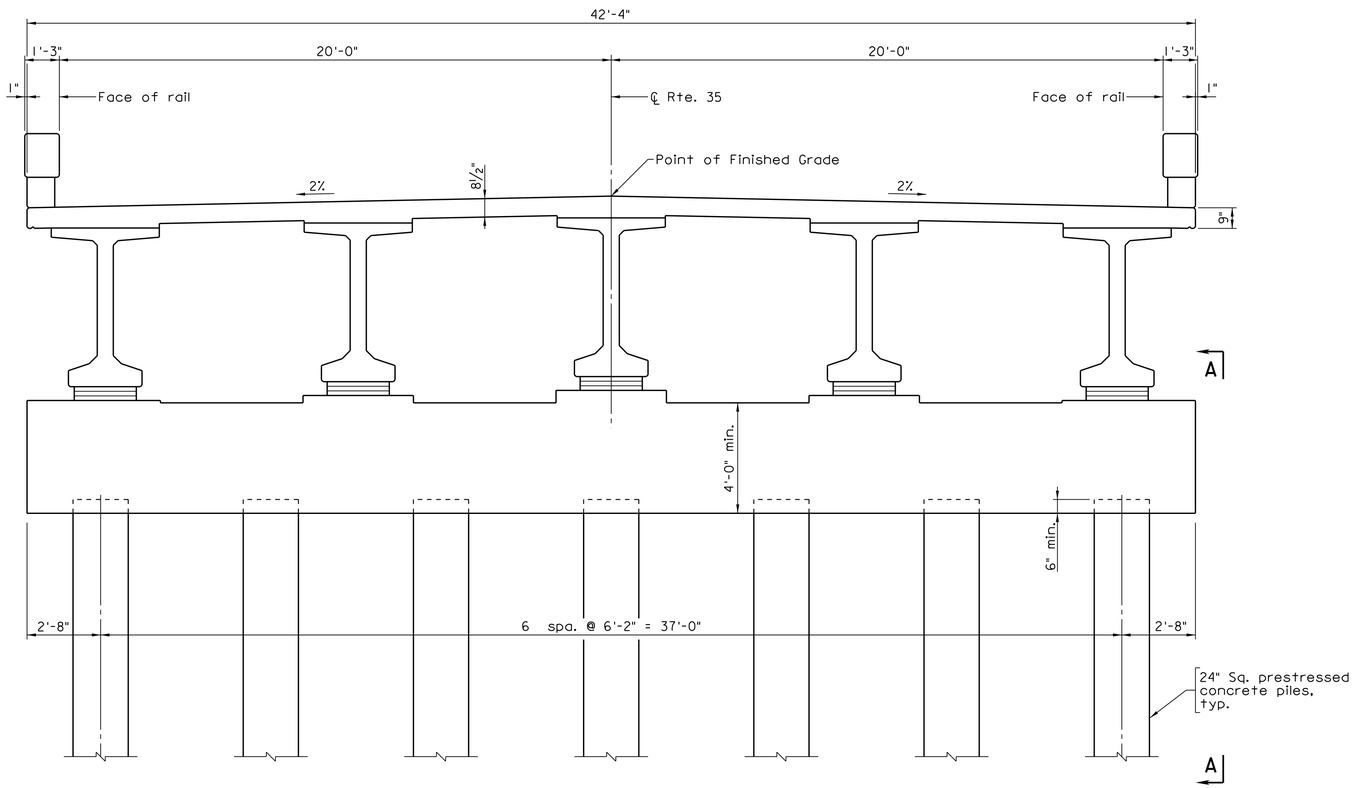

ELEVATION

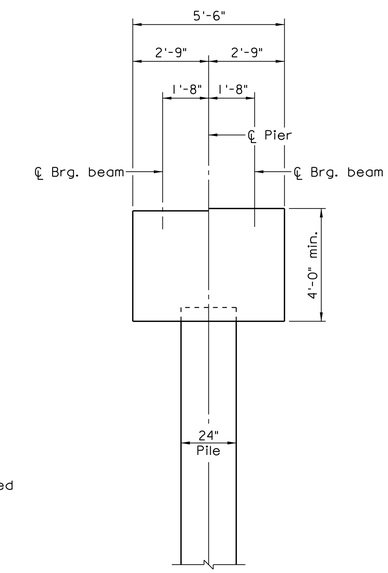

VIEW A-A

bxxxxx005.dgn

JOHNSON, MIRMIRAN & THOMPSON
RICHMOND, VA
STRUCTURAL ENGINEER

Scale: 3/8" = 1'-0"

© 2013, Commonwealth of Virginia

No.	Description	Date
	Revisions	

COMMONWEALTH OF VIRGINIA
DEPARTMENT OF TRANSPORTATION

STRUCTURE AND BRIDGE DIVISION

RTE. 35 OVER NOTTOWAY RIVER PIER ELEVATION

Designed: WRA
Drawn: SRS
Checked: AAP

Date	Plan No.	Sheet No.
Aug. 2013	031-13A	5 of 7

STATE	FEDERAL AID ROUTE	FEDERAL AID PROJECT	STATE ROUTE	STATE PROJECT	SHEET NO.
VA.	—		35	003-87-112, B604	6

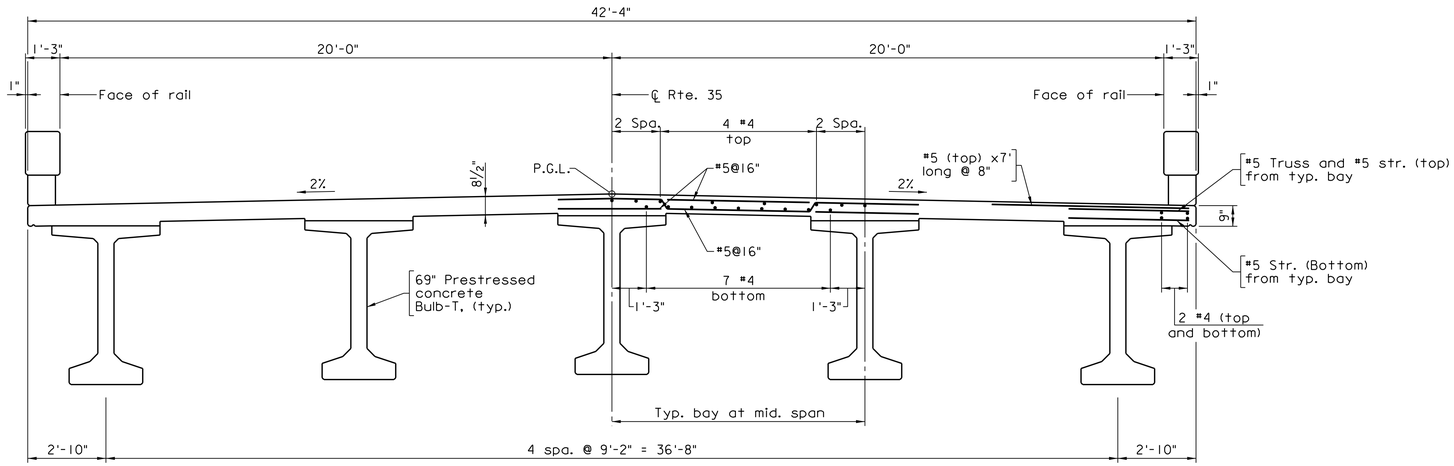

TRANSVERSE SECTION

Note:

For section over piers use #6 bars longitudinal and space at 4½" (use 60' bars)

Scale: ⅜" = 1'-0"

© 2013, Commonwealth of Virginia

bxxxxx006.dgn

JOHNSON, MIRMIRAN & THOMPSON
RICHMOND, VA
STRUCTURAL ENGINEER

No.	Description	Date
	Revisions	

COMMONWEALTH OF VIRGINIA
DEPARTMENT OF TRANSPORTATION

STRUCTURE AND BRIDGE DIVISION

RTE. 35 OVER NOTTOWAY RIVER
TRANSVERSE SECTION

Designed: WRA
Drawn: SRS
Checked: AAP

Date	Plan No.	Sheet No.
Aug. 2013	031-13A	6 of 7

STATE	FEDERAL AID ROUTE	FEDERAL AID PROJECT	STATE ROUTE	STATE PROJECT	SHEET NO.
VA.	—		35	003-87-112, B604	7

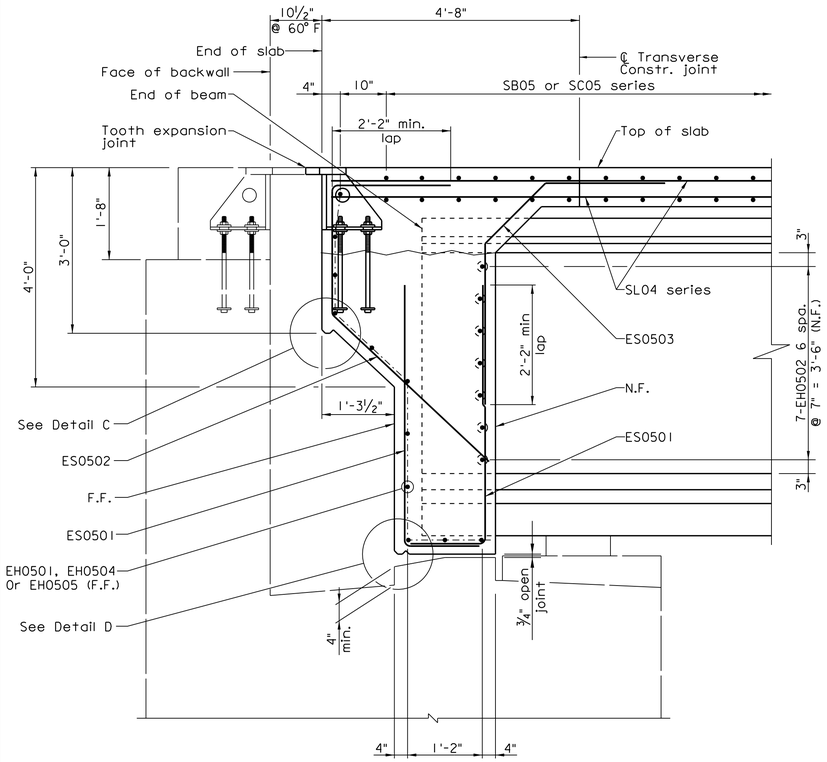

SECTION BETWEEN BEAMS

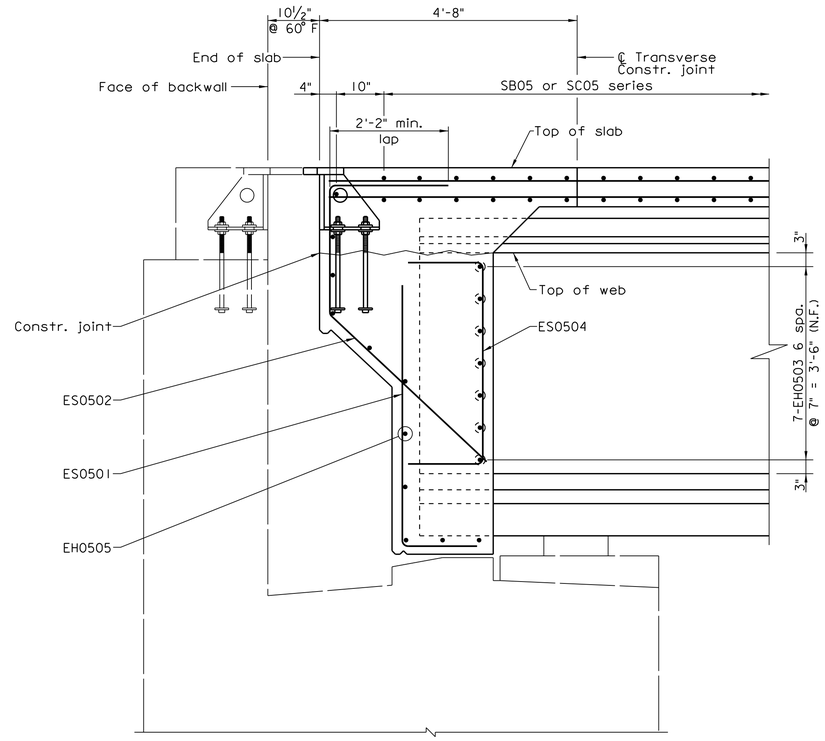

SECTION AT BEAM

For details not shown, see Section Between Beams

Note:

Epoxy-Resin Type EP-3B shall be the prime base coat. and type EP-3T shall be the finish coat. Epoxy-Resin materials shall comply with Section 243 of the specifications. Surface preparation, mixing, application and curing shall be in accordance with Section 416 of the Specifications, as applicable to type EP-3 Epoxy-Resin. The application of sand on the wet surface will not be required.

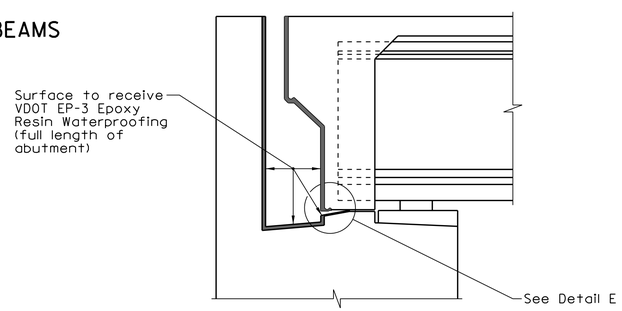

WATERPROOFING DETAIL

Not to scale

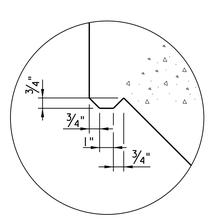

DETAIL C

Not to scale

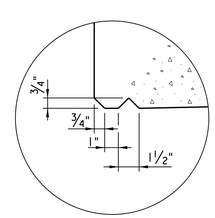

DETAIL D

Not to scale

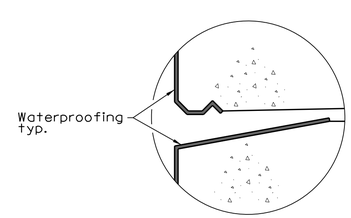

DETAIL E

Not to scale

Scale: ¾" = 1'-0"

© 2013, Commonwealth of Virginia

Bxxxxx007.dgn

JOHNSON, MIRMIRAN & THOMPSON
RICHMOND, VA
STRUCTURAL ENGINEER

No.	Description	Date
	Revisions	

COMMONWEALTH OF VIRGINIA
DEPARTMENT OF TRANSPORTATION

STRUCTURE AND BRIDGE DIVISION

CONCRETE END DIAPHRAGM SECTIONS AND MISCELLANEOUS DETAILS

Designed: WRA
Drawn: SRS
Checked: AAP

Date	Plan No.	Sheet No.
Aug. 2013	031-13A	7 of 7

VDOT

WAGMAN

BRIDGING GENERATIONS · SINCE 1902

JMT®

JOHNSON, MIRMIRAN & THOMPSON

Engineering A Brighter Future®

Route 35 Bridge Replacement

A Design-Build Project

Southampton County, Virginia

From: 0.072 Miles West of Southampton County Line
To: 0.364 Miles West of Southampton County Line

VDOT

Price Proposal

State Project No.: (NFO) 0035-087-112, PE-101, RW-201, C-501, B-604
Federal Project No.: BR-087-5(014)
Contract ID Number: C00081457DB57

Proposal Submitted by:

WAGMAN
BRIDGING GENERATIONS · SINCE 1902

JMT
JOHNSON, MIRMIRAN & THOMPSON
Engineering A Brighter Future®

9.11.2013

ATTACHMENT 4.0.1.2

DESIGN-BUILD PRICE PROPOSAL CHECKLIST

Project Name: Route 35 Bridge Replacement
Contract ID Number: C00081457DB57

- Contents of Price Proposal:

☒ **Cost Breakdown Summary in whole numbers and Proposal Price in both numbers and words (Attachment 4.3.1)**

☒ **Total number of Bridge Closure Days (BCDs) in both words and numbers (Attachment 4.3.1)**

☒ **Price Adjustment Information and Forms for Fuel, Asphalt and Steel, including identification of pay items and associated quantities eligible for adjustment (Part 3, Section 6.3, Attachments 6.3)**

☒ **Proposal Guaranty (C-24) required by Section 102.07 of Part 5, Division I Amendments to the Standard Specifications**

☒ **Sworn Statement Forms (C-104, C-105, Attachments 4.3.4(a) and 4.3.4(b))**

☒ **DBE Requirements Forms (C-111, C-49 and C-112) as applicable (Attachments 4.3.5(a), 4.3.5(b) and 4.3.5(c))**

☒ **CD-ROM containing the entire Price Proposal in a single cohesive Adobe PDF file**

VDOT
Virginia Department of Transportation

Section 4.3.1

Attachment 4.3.1

Price proposal Form

WAGMAN
Bridging Generations · Since 1902

ATTACHMENT 4.3.1

PRICE PROPOSAL FORM

4.3.1 Offeror shall specify the pricing information for the items below, the dollars amount shall be in whole numbers:

Price Proposal Cost Breakdown Summary;

Design Services, LS	$1,065,000.00
Mobilization (Construction), LS	$ 485,706.00
QA/QC (Construction), LS	$ 540,000.00
Dismantle and Remove Existing Structure, LS	$ 335,000.00
Earthwork, LS	$ 335,905.00
Roadway Incidentals, LS	$ 961,244.00
Bridge (Structures), LS	$ 5,302,550.00
Drainage, LS	$ 90,556.00
Utilities, LS	$ 365,000.00
Environmental Permitting, LS	$ 171,000.00
ROW Acquisition, LS	$ 48,000.00
All Others Costs, LS	$ 173,798.00

Proposal Price; (Specify the Total Lump Sum price in both numbers and words, this price shall **equal** to the total sum of the items listed above)

Lump Sum (LS): Nine million eight hundred seventy three thousand seven hundred fifty nine and no/100 ($9,873,759.00)

4.3.2 Offeror shall specify the total number of Bridge Closure Days (BCDs) in both numbers and words:

BCDs = Three hundred sixty five (365) days

Signature: Todd E Baker Date: 9/11/2013

Design-Builder: G.A. & F.C. Wagman, Inc.

Vendor No.: W002

VDOT
Virginia Department of Transportation

SECTION 4.3.2

WAGMAN
BRIDGING GENERATIONS · SINCE 1902

EXHIBIT 6.3 (c)
ADJUSTMENT FOR FUEL

VIRGINIA DEPARTMENT OF TRANSPORTATION
SPECIAL PROVISION FOR
OPTIONAL ADJUSTMENT FOR FUEL
DESIGN-BUILD PROJECTS

June 30, 2011

In the event the Design-Builder elects to seek adjustment for fuel items designated in the Price Proposal\Contract as Price Adjustment Items such items will be subject to price adjustment as set forth herein. Other items will not be adjusted, except as otherwise specified in the contract.

The Design-Builder will submit their monthly application for payment associated with eligible work packages with an adjustment up or down as appropriate for cost changes in fuel used on specific items of work identified in this provision. A master listing of standard items eligible for fuel adjustment is provided by the Department on its website at the following link http://www.virginiadot.org/business/resources/masteroptionalfuelitems.pdf. The listing on the web site also includes the corresponding fuel factor for each item. The fuel usage factor for each item is considered inclusive of all fuel usage.

The amount of adjustment will be computed from the change in the indexes and the on-site fuel use as shown in the Department's master listing of eligible items.

In order to be eligible for fuel adjustment under this provision, the Design-Builder shall clearly identify in its Price Proposal those pay items and the associated quantities it chooses to have fuel adjustment applied to in its work packages. Items the Design-Builder claims in its application of payment for fuel adjustments must be properly designated in order to be considered for adjustment. Items not properly designated or left out of the Design-Builder's Price Proposal will automatically not be considered for adjustment.

The monthly index price to be used in the administration of this provision will be calculated by the Department from the Diesel fuel prices published by the U. S. Department of Energy, Energy Information Administration on highway diesel prices, for the Lower Atlantic region. The monthly index price will be the price for diesel fuel calculated by averaging each of the weekly posted prices for that particular month.

For the purposes of this provision, the base index price will be calculated using the data from the month preceding the receipt of bids. The base index price will be posted by the Department at the beginning of the month for all bids received during that month.

The current index price will be posted by the Department and will be calculated using the data from the month preceding the particular estimate being vouchered for payment.

The current monthly quantity for eligible items of work selected by the Design-Builder for fuel adjustment in its work packages will be multiplied by the appropriate fuel factor to determine the gallons of fuel to be cost adjusted. The amount of adjustment per gallon will be the net difference between the current index price and the base index price. Computation for adjustment will be made as follows:

$$S = (E - B)\ QF$$

Where; S = Monetary amount of the adjustment (plus or minus)
B = Base index price
E = Current index price

Q = Quantity of individual units of work
F = Appropriate fuel factor

Adjustments will not be made for work performed beyond the original contract time limit unless the original time limit has been changed by an executed Work Order.

If new pay items are added to this contract by Work Order and they are listed in the Department's master listing of eligible items, the Work Order must indicate which of these individual items will be fuel adjusted; otherwise, those items will not be fuel adjusted. If applicable, designating which new pay items will be added for fuel adjustment must be determined during development of the Work Order and clearly shown on the Work Order form. The Base Index price on any new eligible pay items added by Work Order will be the Base Index price posted for the month in which bids were received for that particular project. The Current Index price for any new eligible pay items added by Work Order will be the Index price posted for the month preceding the estimate on which the Work Order is paid.

When quantities differ between the last monthly application of payment prepared upon final acceptance and the final application of payment, adjustment will be made using the appropriate current index for the period in which that specific item of work was last performed.

In the event any of the base fuel prices in this contract increase more than 100 percent (i.e. fuel prices double), the Department will review each affected item of work and give the Design-Builder written notice if work is to stop on any affected item of work. The Department reserves the right to reduce, eliminate or renegotiate the price for remaining portions of affected items of work.

Any amounts resulting from fuel adjustment will not be included in the total cost of work for determination of progress or for extension of contract time.

__I elect to use this provision

✓ I elect not to use this provision

Date: 9/11/2013

Signature: Todd E. Baker

Design-builder: G.A. & F.C. Wagman, Inc.

Vendor No.: W002

EXHIBIT 6.3(a)
ADJUSTMENT FOR ASPHALT

SPECIAL PROVISION FOR
ASPHALT MATERIAL PRICE ADJUSTMENT
DESIGN-BUILD PROJECTS

June 30, 2011

In the event the Design-Builder elects to seek adjustment for asphalt items designated in the Price Proposal\Contract as Price Adjustment Items such items will be subject to price adjustment as set forth herein. Other items will not be adjusted, except as otherwise specified in the contract. If new pay items which contain Asphalt Material are established by Work Order, they will not be subject to Price Adjustment unless specifically designated in the Work Order to be subject to Price Adjustment.

Each month, the Department will publish an average state-wide PG 64-22 f.o.b. price per ton developed from the average terminal prices provided to the Department from suppliers of asphalt cement to contractors doing work in Virginia. The Department will collect terminal prices from approximately 12 terminals each month. These prices will be received once each month from suppliers on or about the last weekday of the month. The high and low prices will be eliminated and the remaining values averaged to establish the average statewide price for the following month. That monthly state-wide average price will be posted on the Scheduling and Contract Division website on or about the first weekday of the following month.

This monthly statewide average price will be the Base Index for all contracts on which bids are received during the calendar month of its posting and will be the Current Index for all asphalt placed during the calendar month of its posting. In the event an index changes radically from the apparent trend, as determined by the Engineer, the Department may establish an index which is determined to best reflect the trend.

The amount of adjustment applied will be based on the difference between the Price Proposal\Contract Base Index and the Current Index for the applicable calendar month during which the work is performed. Adjustment of any asphalt material item designated as a price adjustment item which does not contain PG 64-22, except PG 76-22, will be based on the indexes for PG 64-22. The quantity of asphalt cement for asphalt concrete pavement to which adjustment will be applied will be the quantity based on the percent of asphalt cement shown on the appropriate approved job mix formula.

The quantity of asphalt emulsion for surface treatments to which adjustment will be applied will be the quantity based on 65 percent residual asphalt.

Price adjustment will be shown as a separate entry on the monthly application of payment for work packages completed; however, such adjustment will not be included in the total cost of the work for progress determination or for extension of contract time.

In order to be eligible for asphalt price adjustment under this provision, the Design-Builder shall clearly identify in its Price Proposal those pay items and the associated quantities it chooses to have asphalt price adjustment applied to in its work packages. Items the Design-Builder claims in its application of payment for asphalt adjustments must be properly designated in order to be considered for adjustment. Items not properly designated or left out of the Design-Builder's Price Proposal will automatically not be considered for adjustment.

Any apparent attempt to unbalance bids in favor of items subject to price adjustment or failure to submit required cost and price data as noted hereinbefore may result in rejection of items for asphalt adjustment.

✓ I elect to use this provision

__ I elect not to use this provision

Date: 9/11/2013

Signature: Todd E. Barker

Design-builder: G.A. & F.C. Wagman, Inc.

Vendor No.: W002

EXHIBIT 6.3(b)

Form C-16a
7-13-05

COMMONWEALTH OF VIRGINIA
DEPARTMENT OF TRANSPORTATION
PRICE ADJUSTMENT

INSTRUCTIONS - This form is to be completed and returned ONLY when asphalt concrete items are designated for price adjustment on the bid price sheets.

PROJECT NUMBER: NFO 0035-87-112, PE-101, RW-201, C-501, B-604
C00081457DB57

DISTRICT: Hampton Roads District

Bid Prices in this contract for items containing PG 64-22 asphalt cement were developed using an f.o.b. price of $ 581.50 per **IMPERIAL** ton for **PG 64-22**. This quote will be averaged into the monthly price index.

Bid Prices in this contract for items containing PG 76-22 asphalt cement were developed using an f.o.b. price of $ 701.50 per **IMPERIAL** ton for **PG 76-22**. This quote is project specific.
(When required by provisions)

Price quotes signed by each supplier from which the Design-Builder proposes to obtain PG 64-22 or PG 76-22 shall be maintained by the successful bidder. These quotes shall be retained on site during the life of the Contract for review by the Engineer upon request.

✓ I elect to use this provision
__ I elect not to use this provision

DATE: 9/11/2013

SIGNATURE: Todd E Bahm

G.A. & F.C. Wagman, Inc.
(Firm or Corporation)

W002
(Vendor No.)

EXHIBIT 6.3(d)
ADJUSTMENT FOR STEEL

VIRGINIA DEPARTMENT OF TRANSPORTATION
SPECIAL PROVISION FOR
PRICE ADJUSTMENT FOR STEEL
DESIGN-BUILD PROJECTS

June 30, 2011

In the event the Design-Builder elects to seek adjustment for steel items designated in the Price Proposal\Contract as Price Adjustment Items such items will be subject to price adjustment as set forth herein. If new pay items which involve steel are established by Work Order, they will not be subject to Price Adjustment unless specifically designated in the Work Order to be subject to Price Adjustment.

The Design-Builder will submit their monthly application for payment associated with eligible work packages with an adjustment up or down as appropriate for cost changes in steel used on specific items of work identified in the Price Proposal/contract in accordance with this provision. Provided at the end of this provision is a master listing of standard bid items the Department has determined are eligible for steel price adjustment. Inventoried materials from the listing of eligible items are specifically excluded for consideration. In addition, concrete items where reinforcing steel is normally included in the unit bid price for the item such as (but not limited to) drop inlets, median barriers, sound barrier walls, bridge railing and parapets, are not eligible for consideration under this provision.

The requirements of this provision shall apply only to material cost changes that occur between the date of the opening of the Price Proposal and the date the material is shipped to the fabricator. To be eligible for this price adjustment, Design-Builder is required to fill out the accompanying Form for Price Adjustment for Eligible Steel Items on Design-Build Projects and submit the same with its Price Proposal for the Project. By signing the Form and submitting it with its Price Proposal Design-Builder declares its intention to participate in the price adjustment in its contract with the Department. For the purposes of this provision, the prices listed on the Form for Price Adjustment for Eligible Steel Items on Design-Build projects are fixed for cost and adjustment calculations regardless of quantities incorporated into final design. Further, in order for steel items to be eligible for adjustment, once shipped to the fabricator, the items shall be specifically stored, labeled, or tagged, recognizable by color marking, and identifiable by project for inspection and audit verification.

Design-Builder shall upon request furnish documentation supporting the price per pound for eligible steel items as shown on the Form for Price Adjustment for Eligible Steel Items on Design-Build Projects furnished with its Price Proposal. Design-Builder must use the format as shown with this Form; no other format for presenting this information will be permitted. Design-Builder shall certify that all items of documentation are original and were used in the computation of the price per pound amount for the represented eligible pay items for the month the Price Proposal was opened. This documentation shall support the base line material price ("Base Price") of the steel item only. Base price per pound shall not include the following cost components: fabrication, shipping, storage, handling, and erection.

Failure to submit all documentation required or requested supporting the per pound prices on eligible steel items will result in Design-Builder being ineligible for a price adjustment of any or all steel items.

Price adjustment of each qualifying item under consideration will be subject to the following condition:

> There is an increase or decrease in the cost of eligible steel materials in excess of 10 percent up to a maximum of 60 percent from the Base Price when compared with the latest published price index ("Price Index") in effect at the time material is shipped to the fabricator.

The Price Index the Department is using is based on The U.S. Department of Labor, Bureau of Labor Statistics, Producers Price Index (PPI) which measures the average price change over time of the specific steel eligible item from the perspective of the seller of goods. The Master List table provided at the end of this provision indicates the Producers Price Index (PPI) steel category index items and the corresponding I.D. numbers to which VDOT items will be compared. **Please note**: The Producers Price Index (PPI) is subject to revision 4 months after original publication, therefore, price adjustments and payments will not be made until the index numbers are finalized.

The price adjustment will be determined by computing the percentage of change in index value beyond 10 percent above or below the index on the date of opening of Design-Builder's Price Proposal to the index value on the date the steel material is shipped to the fabricator (Please see included sample examples). Weights and date of shipment must be documented by a bill of lading provided to the Department. The final price adjustment dollar value will be determined by multiplying this percent increase or decrease in the index (after 10%) by the represented quantity of steel shipped, by the Base Price per pound subject to the limitations herein.

Price increase/decrease will be computed as follows:

$$A = B \times P \times Q$$

Where;

- A = Steel price adjustment in lump sum dollars
- B = Average weighted price of steel submitted in Design-Builder's Price Proposal for project in price per pound as listed on the Form for Price Adjustment for Eligible Steel Items on Design-Build Project
- P = Adjusted percentage change in PPI average from shipping date to date of opening of Price Proposal minus 10% (0.10) threshold
- Q = Total quantity of steel in pounds shipped to fabricator for specific project

The need for application of the adjustments herein to extra work will be determined by the Engineer on an individual basis and, if appropriate, will be specified on the Work Order.

This price adjustment is capped at 60 percent. This means the maximum "P" value for increase or decrease that can be used in the above equation is 50% (60%-10% threshold).

Calculations for price adjustment shall be shown separate from the monthly progress payment for work packages and will not be included in the total cost of work for determination of progress or for extension of contract time.

Upon Department review and due process consideration for redress by Design-Builder, any apparent evidence to unbalance the price supplied by Design-Builder in favor of items subject to price adjustment will result in ineligibility for Department participation under this provision.

FORM FOR PRICE ADJUSTMENT FOR ELIGIBLE STEEL ITEMS ON DESIGN-BUILD PROJECTS
Must be supplied with Price Proposal for Department Participation

(All prices to be supported by project-specific quotes)

DATE FOR RECEIPT OF PRICE PROPOSAL September 11, 2013

Note: All prices (costs) are to include any surcharges on materials quoted. Vendors must include this surcharge with their cost. All prices (costs) are F.O.B. from the originating mill.

Item Number	Item Description	Quantity	Unit	Unit Price	Supplier	Date of Quote
	NONE					

We/I, the undersigned, understand that by supplying prices for the steel items listed above and signing this form we are declaring our desire to apply the Special Provision For Steel Adjustment for Design-Build Projects to this Price Proposal and contract. The terms and conditions for participation are as stated in the Special Provision For Steel Adjustment for Design-Build Projects.

G.A. & F.C. Wagman, Inc.
Design-Builder

9-11-2013
Date

Sample Calculation of a Price Adjustment (increase)

Project bid on April 28, 2004.

Project has 450,000 lb. of eligible structural steel.

Design Builder's *f.o.b. supplier price for structural steel submitted in the Price Proposal is $0.2816 per pound.

*free on board

Adjusted** BLS Producers Price Index (PPI) most recently published average at time of opening of the Price Proposal is 139.6.

All eligible steel shipped to fabricator in same month, October 2004.

Adjusted BLS Producers Price Index (PPI) most recently published average for month of October is 161.1

Adjustment formula is as follows:

A = B X P X Q

Where;
- A = Steel price adjustment in lump sum dollars
- B = Average weighted price of steel submitted in the Price Proposal for Design-Build project in $ per pound
- P = Adjusted percentage change in PPI average from shipping date to date of submitted Price Proposal minus 10% (0.10) threshold
- Q = Total quantity of eligible steel shipped to fabricator in October 2004 for this project in pounds

B = $0.2816

P = (161.1- 139.6)/139.6 – 0.10 = 0.054

Q = 450,000 lb.

A = 0.2816 x 0.054 x 450,000

A = $6,842.88 pay adjustment to Design-Builder

Sample Calculation of a Price Adjustment (decrease)

Project bid on April 28, 2004.

Project has 450,000 lb. of eligible structural steel.

Design-Builder's *f.o.b. supplier price for structural steel submitted in the Price Proposal is $0.2816 per pound.

*free on board

Adjusted BLS Producers Price Index (PPI) most recently published average at time of opening of the Price Proposal is 156.6.

All eligible steel shipped to fabricator in same month, October 2004.

Adjusted BLS Producers Price Index (PPI) most recently published average for month of October is 136.3

Adjustment formula is as follows:

A = B X P X Q

Where;
- A = Steel price adjustment in lump sum dollars
- B = Average weighted price of steel submitted in the Price Proposal for Design-Build project in $ per pound
- P = Adjusted percentage change in PPI average from shipping date to date of submitted Price Proposal minus 10% (0.10) threshold
- Q = Total quantity of eligible steel shipped to fabricator in October 2004 for this project in pounds

B = $0.2816

P = (156.6 – 136.3)/156.6 – 0.10 = 0.030

Q = 450,000 lb.

A = 0.2816 x 0.030 x 450,000

A = $3,801.60 credit to Department

MASTER LISTING

STANDARD BID ITEMS ELIGIBLE FOR STEEL PRICE ADJUSTMENT

March 18, 2009

ITEM NUMBER	ITEM DESCRIPTION	UNITS	BLS Series I. D. Number WPU used in $ adjust.
00519	SHEET PILE, STEEL	SF	avg. 1017 & 101
00540	REINF. STEEL	LB	101704
00542	EPOXY COATED REINF. STEEL	LB	101704
00560	STRUCTURAL STEEL JB-1	LB	avg. 1017 & 101
11030	REINF. STEEL BRIDGE APPR. SLAB	LB	101704
11181	PATCH.HYDR.CEM.CONC. PAVE.	SY	101704
13290	GUARDRAIL GR-8 (NCHRP 350 TL-3)	LF	avg. 1017 & 101
13292	GUARDRAIL GR-8A (NCHRP 350 TL-3)	LF	avg. 1017 & 101
13294	GUARDRAIL GR-8B (NCHRP 350 TL-3)	LF	avg. 1017 & 101
13310	GUARDRAIL TERMINAL GR-6 (NCHRP 350)	LF	avg. 1017 & 101
13320	GUARDRAIL GR-2	LF	avg. 1017 & 101
13323	GUARDRAIL GR-2A	LF	avg. 1017 & 101
13331	RAD. GUARDRAIL GR-2	LF	avg. 1017 & 101
13333	RAD. GUARDRAIL GR-2A	LF	avg. 1017 & 101
13335	GUARDRAIL GR-3	LF	avg. 1017 & 101
13341	GUARDRAIL TER. GR-6(WEATHERING STEEL	LF	avg. 1017 & 101
13351	GUARDRAIL GR-8	LF	avg. 1017 & 101
13352	GUARDRAIL GR-8A	LF	avg. 1017 & 101
13353	GUARDRAIL GR-8B	LF	avg. 1017 & 101
13355	GUARDRAIL GR-10	LF	avg. 1017 & 101
13421	MEDIAN BARRIER MB-3	LF	avg. 1017 & 101
13450	MEDIAN BARRIER MB-5	LF	avg. 1017 & 101
13451	MEDIAN BARRIER MB-5A	LF	avg. 1017 & 101
13452	MEDIAN BARRIER MB-5B	LF	avg. 1017 & 101
13545	REINF. STEEL	LB	101704
14502	REINFORCING STEEL	LB	101704
15290	PATCH.CEM.CONC.PAVE.TY.CRCP-A	SY	101704
15302	PATCH.CEM.CONC.PAVE. TY. II	SY	101704
15305	PATCH.CEM.CONC.PAVE.TY. IV-A	SY	101704
17323	GUARDRAIL BEAM *	LF	avg. 1017 & 101
17325	RADIAL GUARDRAIL BEAM *	LF	avg. 1017 & 101
17327	RUB RAIL	LF	avg. 1017 & 101
17353	CABLE GR-3	LF	avg. 1017 & 101
17521	GUARDRAIL BEAM (WEATHERING STEEL)	LF	avg. 1017 & 101
17523	RADIAL GUARDRAIL BEAM (WEATHERING STEEL)	LF	avg. 1017 & 101
17525	RUB RAIL (WEATHERING STEEL)	LF	avg. 1017 & 101
22501	FENCE FE-W1	LF	avg. 1017 & 101
22643	FENCE FE-CL	LF	avg. 1017 & 101
22645	FENCE FE-CL VINYL COATED	LF	avg. 1017 & 101
23043	WATER GATE FE-4 TY.III	LF	avg. 1017 & 101
23501	FENCE FE-W1 (FABRIC ONLY)	LF	avg. 1017 & 101
45522	4" STEEL ENCASE. PIPE	LF	101706
45532	6" STEEL ENCASE. PIPE	LF	101706
45562	16" STEEL ENCASE. PIPE	LF	101706

45572	18" STEEL ENCASE. PIPE	LF	101706
45582	24" STEEL ENCASE. PIPE	LF	101706
45584	24" JACKED STEEL ENCASEMENT PIPE	LF	101706
45592	30" STEEL ENCASE. PIPE	LF	101706
50402	SIGN POST STEEL 3"	LF	101706
50404	SIGN POST STEEL 4"	LF	101706
50406	SIGN POST STEEL 6"	LF	101706
50410	SIGN POST STEEL 10"	LF	101706
50412	SIGN POST STEEL 12"	LF	101706
50414	SIGN POST STEEL 14"	LF	101706
50416	SIGN POST STEEL 16"	LF	101706
50418	SIGN POST STEEL 18"	LF	101706
51317	SIG. POLE MP-1 20' ONE ARM 30'	EA	101706
51319	SIG. POLE MP-1 20' ONE ARM 32'	EA	101706
51325	SIG. POLE MP-1 20' ONE ARM 38'	EA	101706
51327	SIG. POLE MP-1 20' ONE ARM 40'	EA	101706
51329	SIG. POLE MP-1 20' ONE ARM 42'	EA	101706
51331	SIG. POLE MP-1 20' ONE ARM 44'	EA	101706
51337	SIG. POLE MP-1 20' ONE ARM 50'	EA	101706
51339	SIG. POLE MP-1 20' ONE ARM 52'	EA	101706
51341	SIG. POLE MP-1 20' ONE ARM 54'	EA	101706
51344	SIG. POLE MP-1 20' ONE ARM 56'	EA	101706
51346	SIG. POLE MP-1 20' ONE ARM 58'	EA	101706
51347	SIG. POLE MP-1 20' ONE ARM 60'	EA	101706
51348	SIG. POLE MP-1 20' ONE ARM 62'	EA	101706
51368	SIG.POLE MP-1 20'TWO ARMS 36'& 42'	EA	101706
51400	SIG.POLE MP-1 CO.LU.ONE ARM 38	EA	101706
51402	SIG.POLE MP-1 CO.LU.ONE ARM 40	EA	101706
51408	SIG.POLE MP-1 CO.LU.ONE ARM 46	EA	101706
51412	SIG.POLE MP-1 CO.LU.ONE ARM 50	EA	101706
51414	SIG.POLE MP-1 CO.LU.ONE ARM 52	EA	101706
51416	SIG.POLE MP-1 CO.LU.ONE ARM 54	EA	101706
51418	SIG.POLE MP-1 CO.LU.ONE ARM 56	EA	101706
51420	SIG.POLE MP-1 CO.LU.ONE ARM 58	EA	101706
51422	SIG.POLE MP-1 CO.LU.ONE ARM 60	EA	101706
55162	LIGHTING POLE LP-1 30'-4'	EA	101706
55163	LIGHTING POLE LP-1 30'-6'	EA	101706
55166	LIGHTING POLE LP-1 30'-12'	EA	101706
55169	LIGHTING POLE LP-1 35'-6'	EA	101706
55171	LIGHTING POLE LP-1 35'-10'	EA	101706
55176	LIGHTING POLE LP-1 40'-8'	EA	101706
55185	LIGHTING POLE LP-2 TYPE A	EA	101706
55186	LIGHTING POLE LP-2 TYPE B	EA	101706
55187	LIGHTING POLE LP-2 TYPE C	EA	101706
55188	LIGHTING POLE LP-2 TYPE D	EA	101706
55189	LIGHTING POLE LP-2 TYPE E	EA	101706
55190	LIGHTING POLE LP-2 TYPE F	EA	101706
55192	LIGHTING POLE LP-2 TYPE H	EA	101706
60452	REINF. STEEL BRIDGE APPR. SLAB	LB	101704
61700	REINF. STEEL	LB	101704
61704	CORROSION RESISTANT REINF. STEEL	LB	101704
61705	EPOXY COATED REINF. STEEL	LB	101704
61750	STRUCT.STEEL HIGH STRG.PLT.GIRDERS	LB	avg. 1017 & 101
61811	STR.STEEL PLATE GIRDER ASTM A709 GRADE50	LB	avg. 1017 & 101
61812	STR.STEEL PLATE GIRDER ASTM A709 GRADE50	LB	avg. 1017 & 101
61813	STR.STEEL PLATE GIRDER ASTM A709 GRADEHPS50W	LB	avg. 1017 & 101

61814	STR.STEEL PLATE GIRDER ASTM A709 GRADEHPS70W	LB	avg. 1017 & 101
61820	STR.STEEL ROLLED BEAM ASTM A709 GRADE 36	LB	avg. 1017 & 101
61821	STR.STEEL ROLLED BEAM ASTM A709 GRADE50	LB	avg. 1017 & 101
61822	STR.STEEL ROLLED BEAM ASTM A709 GRADE50W	LB	avg. 1017 & 101
61990	STEEL GRID FLOOR	SF	avg. 1017 & 101
64110	STEEL PILES 10"	LF	avg. 1017 & 101
64112	STEEL PILES 12"	LF	avg. 1017 & 101
64114	STEEL PILES 14"	LF	avg. 1017 & 101
64768	DRIVING TEST FOR 12" STEEL PILE	LF	avg. 1017 & 101
64778	DRIVING TEST FOR 14" STEEL PILE	LF	avg. 1017 & 101
65200	REINF. STEEL	LB	101704
65204	CORROSION RESISTANT REINF. STEEL	LB	101704
65205	EPOXY COATED REINF. STEEL	LB	101704
67086	PED. FENCE 6'	LF	avg. 1017 & 101
67088	PED. FENCE 8'	LF	avg. 1017 & 101
67089	PED. FENCE 10'	LF	avg. 1017 & 101
68100	REINF. STEEL	LB	101704
68104	CORROSION RESISTANT REINF. STEEL	LB	101704
68105	EPOXY COATED REINF. STEEL	LB	101704
68107	STR.STEEL PLATE GIRDER ASTM A709 GRADE50	LB	avg. 1017 & 101
68108	STR. STEEL PLATE GIRDER ASTM A709 GR50W	LB	avg. 1017 & 101
68109	STR. STEEL PLATE GIRDER ASTM A709 GR.HPS50W	LB	avg. 1017 & 101
68110	STR. STEEL PLATE GIRDER ASTM A709 GR.HPS70W	LB	avg. 1017 & 101
68112	STR.STEEL ROLLED BEAM ASTM A709 GR.36	LB	avg. 1017 & 101
68113	STR.STEEL ROLLED BEAM ASTM A709 GR.50	LB	avg. 1017 & 101
68114	STR.STEEL ROLLED BEAM ASTM A709 GR. 50W	LB	avg. 1017 & 101
68115	STRUCT. STEEL	LB	avg. 1017 & 101
68270	REINF. STEEL BRIDGE APPR. SLAB	LB	101704
69060	SHEET PILES, STEEL	SF	avg. 1017 & 101
69100	REINF. STEEL	LB	101704
69104	CORROSION RESISTANT REINF. STEEL	LB	101704
69105	EPOXY COATED REINF. STEEL	LB	101704
69110	STEEL PILES 10"	LF	avg. 1017 & 101
69112	STEEL PILE 12"	LF	avg. 1017 & 101
69113	DRIVING TEST FOR 12" STEEL PILE	LF	avg. 1017 & 101

___I elect to use this provision

✓ I elect not to use this provision

Date: 9/11/2013

Signature: Tyler E Barker

Design-Builder: G.A. & F.C. Wagman, Inc.

Vendor No.: W002

VDOT
Virginia Department of Transportation

SECTION 4.3.3
PROPOSAL GUARANTY

WAGMAN
BRIDGING GENERATIONS · SINCE 1902

Form C-24
Rev. 7-6-05

COMMONWEALTH OF VIRGINIA
DEPARTMENT OF TRANSPORTATION
PROPOSAL GUARANTY

KNOW ALL MEN BY THESE PRESENTS, THAT WE G.A. & F.C. Wagman, Inc. As principal, and Western Surety Company Surety, are held and firmly bound unto the Commonwealth of Virginia as obligee, in the amount of FIVE PERCENT OF THE DOLLAR VALUE OF THE BID, lawful money of the United States of America, for the payment of which, well and truly to be made, we bind ourselves, our heirs, executors, administrators, successors and assigns, jointly and severally and firmly by these presents.

SIGNED, sealed and dated this 22nd Day of August , 20 13

WHEREAS, the above said principal is herewith submitting its proposal for:

PROJECT NUMBER:

C00081457DB57; Route 35 Bridge Replacement, Southampton County, VA State Project #(NFO)0035-087-112, PE-101,RW-210,C-501, B0604;Federal Project #BR-087-5(014)

NOW, THEREFORE, the condition of the above obligee is such, that if the aforesaid principal shall be awarded the contract upon said proposal and shall within the time specified in the Specifications after the notice of such award enter into a contract and give bond for the faithful performance of the contract, then this obligation shall be null and void; otherwise to remain in full force and effect and the principal and surety will pay unto the obligee the difference in money between the amount of the bid of the said principal and the amount for which the obligee may legally contract with another party to perform the said work if the latter amount be in excess of the former; but in no event shall the liability exceed the penal sum hereof.

G.A. & F.C. Wagman, Inc.
(Principal*)

By: [signature]
Senior V.P. of Operations
(Officer, Partner or Owner) (Seal)

(Principal*)

By:
(Officer, Partner or Owner) (Seal)

(Principal*)

By:
(Officer, Partner or Owner) (Seal)

Western Surety Company
(Surety Company)

By: [signature]
(Attorney-in-Fact**) (Seal)

4550 Lena Drive
Mechanicsburg, PA 17055
(Address)

By:
(Surety Company)

(Attorney-in-Fact**) (Seal)

By:
(Address)

*Note: If the principal is a *joint venture*, each party thereof must be named and execution made by same hereon. If there is more than one surety to the bid bond, each surety must be named and execution shall be made by same hereon.

Electronic Bid Only: In lieu of completing the above section of the Contract Performance Bond, the Principal shall file an Electronic Bid Bond when bidding electronically. By signing below the Principal is ensuring the identified electronic bid bond has been executed and the Principal and Surety are firmly bound unto the Commonwealth of Virginia under the same conditions of the bid bond as shown above.

Electronic Bid Bond ID# | Company/Bidder Name | Signature and Title

**Attach copy of Power of Attorney

Western Surety Company

POWER OF ATTORNEY APPOINTING INDIVIDUAL ATTORNEY-IN-FACT

Know All Men By These Presents, That WESTERN SURETY COMPANY, a South Dakota corporation, is a duly organized and existing corporation having its principal office in the City of Sioux Falls, and State of South Dakota, and that it does by virtue of the signature and seal herein affixed hereby make, constitute and appoint

James R Gould, Joseph G Buyakowski, Alson O Wolcott Jr, Eugene M Fritz, Patricia C Robinson, Kathy R Reisinger, Donald R Wert, Deborah L Cottom, Individually

of Mechanicsburg, PA, its true and lawful Attorney(s)-in-Fact with full power and authority hereby conferred to sign, seal and execute for and on its behalf bonds, undertakings and other obligatory instruments of similar nature

- In Unlimited Amounts -

and to bind it thereby as fully and to the same extent as if such instruments were signed by a duly authorized officer of the corporation and all the acts of said Attorney, pursuant to the authority hereby given, are hereby ratified and confirmed.

This Power of Attorney is made and executed pursuant to and by authority of the By-Law printed on the reverse hereof, duly adopted, as indicated, by the shareholders of the corporation.

In Witness Whereof, WESTERN SURETY COMPANY has caused these presents to be signed by its Vice President and its corporate seal to be hereto affixed on this 12th day of November, 2012.

WESTERN SURETY COMPANY

Paul T. Bruflat, Vice President

State of South Dakota
County of Minnehaha } ss

On this 12th day of November, 2012, before me personally came Paul T. Bruflat, to me known, who, being by me duly sworn, did depose and say: that he resides in the City of Sioux Falls, State of South Dakota; that he is the Vice President of WESTERN SURETY COMPANY described in and which executed the above instrument; that he knows the seal of said corporation; that the seal affixed to the said instrument is such corporate seal; that it was so affixed pursuant to authority given by the Board of Directors of said corporation and that he signed his name thereto pursuant to like authority, and acknowledges same to be the act and deed of said corporation.

My commission expires
June 23, 2015

J. MOHR
NOTARY PUBLIC
SOUTH DAKOTA

J. Mohr, Notary Public

CERTIFICATE

I, L. Nelson, Assistant Secretary of WESTERN SURETY COMPANY do hereby certify that the Power of Attorney hereinabove set forth is still in force, and further certify that the By-Law of the corporation printed on the reverse hereof is still in force. In testimony whereof I have hereunto subscribed my name and affixed the seal of the said corporation this 22nd day of August, 2013

WESTERN SURETY COMPANY

L. Nelson, Assistant Secretary

Form F4280-7-2012

Virginia Department of Transportation

Section 4.3.4
Form C-104
Attachment 4.3.4(a)

WAGMAN

Bridging Generations · Since 1902

Form C-104
Rev. 7-13-05

COMMONWEALTH OF VIRGINIA
DEPARTMENT OF TRANSPORTATION

PROJECT: 0035-087-112, PE-101, RW-201, C-501, B-604

FHWA: BR-087-5(014)

This form must be completed, signed and returned with bid; and failure to do so may result in the rejection of your bid. **THE CONTRACTOR SHALL AFFIRM THE FOLLOWIN G STATEM ENT EITHER BY SIGNING THE AFFIDAVIT AND HA VING IT NOTARIZED OR BY SIGNING THE UNSWORN DECLARATION UNDER PENALTY OF PERJURY U NDER THE LAWS OF THE UNITED STATES.** A SEPARATE FORM MUST BE SUBMITTED BY EACH PRINCIPAL OF A JOINT VENTURE BID.

STATEMENT, In preparation and submission of this bid, I, the firm, corporation or officers, agents or employees thereof did not, either directly or indirectly, enter into any combination or arrangement with any persons, firm or corporation or enter into any agreement, participate in any collusion, or otherwise take any action in the restraint of free, competitive bidding in violation of the Sherman Act (15 U.S.C. Section 1) or Article 1.1 or Chapter 12 of Title 18.2 (Virginia Governmental Frauds Act), Sections 59.1-9.1 through 59.1-9.17 or Sections 59.1-68.6 through 59.1-68.8 of the Code of Virginia.

AFFIDAVIT

The undersigned is duly authorized by the bidder to make the foregoing statement to be filed with bids submitted on behalf of the bidder for contracts to be let by the Commonwealth Transportation Board.

Signed at _____ , this ____ day of _____ , 20 ____
County (City), STATE

_____ By: _____ _____
(Name of Firm) (Signature) Title (print)

STATE of _____ COUNTY (CITY) of _____
To-wit:

I _____ , a Notary Public in and for the State and

County(City) aforesaid, hereby certify that this day _____

personally appeared before me and made oath that he is duly authorized to make the above statements and that such statements are true and correct.

Subscribed and sworn to before me this _____ day of _____ , 20 _____

_____ My Commission expires _____
Notary Public

OR
UNSWORN DECLARATION

The undersigned is duly authorized by the bidder to make the foregoing statement to be filed with bids submitted on behalf of the bidder for contracts to be let by the Commonwealth Transportation Board.

Signed at York, York, Pennsylvania , this 5 day of September , 20 13
County (City), STATE

G.A. & F.C. Wagman, Inc. By: Todd E. Becker Senior V.P. of Operations
(Name of Firm) (Signature) Title (print)
Todd E. Becker

VDOT
Virginia Department of Transportation

Section 4.3.4
Form C-105
Attachment 4.3.4(b)

WAGMAN
Bridging Generations · Since 1902

Form C-105
Rev. 7-13-05

COMMONWEALTH OF VIRGINIA
DEPARTMENT OF TRANSPORTATION
AFFIDAVIT

PROJECT: 0035-087-112, PE-101, RW-201, C-501, B-604

FHWA: BR-087-5(014)

This form must be completed, signed, notarized and returned with bid; and failure to do so, may result in the rejection of your bid. A separate form must be submitted by each principal of a joint venture bid.

1. I, the firm, corporation or officers, agents or employees thereof have neither directly nor indirectly entered into any combination or arrangement with any person, firm or corporation or entered into any agreement, participated in any collusion, or otherwise taken any action in restraint of free competitive bidding in connection with such contract, the effect of which is to prevent competition or increase the cost of construction or maintenance of roads or bridges.

   During the preceding twelve months, I (we) have been a member of the following Highway Contractor's Associations, as defined in Section 33.1-336 of the Code of Virginia (1970). (If none, so state).

NAME	Location of Principal Office
0035-087-112, PE-101, RW-201	BR-087-5(014)
Please see attached	

2. I (we) have _x_, have not _____, participated in a previous contract or subcontract subject to the equal opportunity clause, as required by Executive Orders 10925, 11114, or 11246, and that I/We have _x_, have not _____, filed with the joint Reporting Committee, the Director of the Office of Federal Contract Compliance, a Federal Government contracting or administering agency, or the former President's Committee on Equal Employment Opportunity, all reports due under the applicable filing requirements.

   Note: The above certification is required by the Equal Employment Opportunity Regulations of the Secretary of Labor [41 CFR 60-1.7(b)(1)], and must be submitted by bidders and proposed subcontractors only in connection with contracts and subcontracts which are subject to the equal opportunity clause. Contracts and subcontracts which are exempt from the equal opportunity clause are set forth in 41 CFR 60-1.5. (Generally only contract or subcontracts of $10,000 or under are exempt.)

   Currently, Standard Form 100 (EEO-1) is the only report required by the Executive Orders or their implementing regulations.

Proposed prime contractors and subcontractors who have participated in a previous contract or subcontract subject to the Executive Orders and have not filed the required reports should note that 41 CFR 60-1.7(b) (1) prevents the award of contract and subcontract unless such contractor submits a report covering the delinquent period or such other period specified by the Federal Highway Administration or by the Director, Office of Federal Contract Compliance, U.S. Department of Labor.

(Continued)

ORDER NO.:
CONTRACT ID. NO.: C00081457DB57

3. The bidder certifies to the best of its knowledge and belief, that it and its principals:

   (a) Are not presently debarred, suspended, proposed for debarment, declared ineligible or voluntarily excluded from covered transactions by any Federal department or agency;

   (b) Have not within a three year period preceding this proposal been convicted of or had a civil judgement rendered against them for commission of fraud or a criminal offence in connection with obtaining, attempting to obtain, or performing a public (Federal, State or local) transaction or contract under a public transaction; violation of Federal or State antitrust statutes or commission of embezzlement, theft, forgery, bribery, falsification or destruction of records, making false statements, or receiving stolen property;

   (c) Are not presently indicted for or otherwise criminally or civilly charged by a governmental entity (Federal, State or local) with commission of any of the offenses enumerated above; and

   (d) Where the bidders is unable to certify to any of the statements in this certification, the bidder shall show an explanation below.

Explanations will not necessarily result in denial of award, but will be considered in determining bidder responsibility. For any explanation noted, indicate below to whom it applies, initiating agency, and dates of action. Providing false information may result in federal criminal prosecution or administration sanctions. The bidder shall provide immediate written notice to the Department if at any time the bidder learns that its certification was erroneous when submitted or has become erroneous by reason of change circumstances.

The undersigned is duly authorized by the bidder to make the foregoing statements to be filed with bids submitted on behalf of the bidder for contracts to be let by the Commonwealth Transportation Board.

Signed at York (York) Pennsylvania, this 5 day of September, 20 13
County (City), STATE

G.A. & F.C. Wagman, Inc. By: Todd E. Becker Senior V.P. of Operations
(Name of Firm) (Signature) Title (print)

STATE of Pennsylvania COUNTY (CITY) of York (York)
To-wit:

I Sharon L. Roberts, a Notary Public in and for the State and County(City) aforesaid, hereby certify that this day Todd E. Becker personally appeared before me and made oath that he is duly authorized to make the above statements and that such statements are true and correct.

Subscribed and sworn to before me this 5th day of September, 20 13

Sharon L Roberts My Commission expires 11-3-15
Notary Public

COMMONWEALTH OF PENNSYLVANIA
NOTARIAL SEAL
SHARON L. ROBERTS, Notary Public
West Manchester Twp., York County
My Commission Expires November 3, 2015

Attachment to C-105 - Contractor Associations - G.A. & F.C. Wagman, Inc.		
1	VTCA	620 Moorefield Park Drive, Suite 120, Richmond, VA 23236-3692
2	MTBMA	2408 Pepper Mill Drive, Glen Burnie, MD 21061
3	ARTBA	1291 28th Street N.W., Washington, D.C. 20007-3389
4	APC	800 North Third Street, Harrisburg, PA 17102
5	AGC of Maryland	1301 York Road #202, Lutherville-Tinomium, MD 21093
6	ACG of the Carolinas	1100 Euclid Avenue, Charlotte, NC 28203
7	AGC of NJ	91 Fieldcrest Avenue, Edison, NJ 08837
8	UTCA	1670 Route 34, North Farmingdale, NJ 07727

VDOT
Virginia Department of Transportation

Section 4.3.5
Forms C-111
Attachment 4.3.5(a)

WAGMAN
Bridging Generations · Since 1902

Form C-111
Rev. 2-15-11

COMMONWEALTH OF VIRGINIA
DEPARTMENT OF TRANSPORTATION
MINIMUM DBE REQUIREMENTS

PROJECT NO. 0035-087-112, PE-101, RW-201, C-501, B-604

FHWA NO. BR-087-5(014)

*** * * INSTRUCTIONS * * ***

THIS FORM CAN BE USED BY THE CONTRACTOR TO SUBMIT THE NAMES OF DBE FIRMS TO BE UTILIZED ON THE PROJECT. THE CONTRACTOR SHALL INDICATE THE DESCRIPTION OF THE CATEGORY (S, M, SP or H) AND THE TYPE OF WORK THAT EACH DBE WILL PERFORM AND THE ALLOWABLE CREDIT PER ITEM(S). ADDITIONAL SHEETS TO SHOW THE ALLOWABLE CREDIT PER ITEM MAY BE ATTACHED IF NECESSARY. **PLEASE NOTE:** THE AMOUNT OF ALLOWABLE CREDIT FOR A DBE SUPPLIER IS 60% OF THE TOTAL COST OF THE MATERIALS OR SUPPLIES OBTAINED AND 100% FOR A DBE MANUFACTURER OF THE MATERIALS AND SUPPLIES OBTAINED. A CONTRACTOR MAY COUNT 100% OF THE FEES PAID TO A DBE HAULER FOR THE DELIVERY OF MATERIALS AND SUPPLIES TO THE PROJECT SITE, BUT NOT FOR THE COST OF THE MATERIALS AND SUPPLIES THEMSELVES.

DBE REQUIREMENT 12 %

PERCENT ATTAINED BY BIDDER 12.02 %

NAMES(S) AND CERTIFICATION NO. OF DBE(S) TO BE USED	USED AS SUBCONTR. (S) MFG. (M) SUPPLIER (SP) HAULER (H)	TYPE OF WORK AND ITEM NO(S)	$ AMOUNT OF ALLOWABLE CREDIT PER ITEM
D.T. Reed Steel Co., Inc. - R440	S-Furnish & Install Rebar	61711, 60452, 62033, 65822, 65200	$570,927.93
D.T. Reed Steel Co., Inc. - R440	S-Furnish & Install Metal Deck	60404	$89,203.42
Hassan Water Resources, LLC - DB2010-0061-2013	S-Design	104	$59,680.00
Quinn Consulting Services, Inc. - DB2006-0076-2009	S-Design	104	$295,000.00
Nickelston Industries, Inc. - N234	S-Guardrail	13373, 13383, 24600	$60,850.00
Spivey Pavement Markings - S550	S-Construction Signs	24160	$111,248.00
		TOTAL	$ 1,186,909.35

TOTAL CONTRACT VALUE $ 9,873,759.00 x REQUIRED DBE 12 % = $ 1,184,851.08

I/WE CERTIFY THAT THE PROPOSED DBE(S) SUBMITTED WILL BE USED ON THIS CONTRACT AS STATED HEREON AND ASSURE THAT DURING THE LIFE OF THE CONTRACT. I/WE WILL MEET OR EXCEED THE PARTICIPATION ESTABLISHED HEREON BY THE DEPARTMENT.

G.A. & F.C. Wagman, Inc. — BIDDER

BY — SIGNATURE

Senior V. P. of Operations — TITLE

BY 9/11/2013 — DATE

VDOT
Virginia Department of Transportation

Section 4.3.5
Form C-49
Attachment 4.3.5(b)

WAGMAN
Bridging Generations · Since 1902

COMM0NWEALTH OF VIRGINIA
DEPARTMENT OF TRANSPORTATION

DBE GOOD FAITH EFFORTS DOCUMENTATION

--DO NOT DETACH--

THIS INFORMATION MUST BE SUBMITTED WITH YOUR BID PROPOSAL IF YOUR BID DOES NOT MEET THE PROJECT DBE REQUIREMENTS, OR WHEN REQUESTED BY VDOT

CONTRACT I.D. NUMBER C00081457DB57

PROJECT NUMBER 0035-087-112

FHWA NUMBER BR-087-5(014)

DISTRICT Hampton Roads

DATE BID SUBMITTED 9/11/2013

BIDDER'S NAME G.A. & F.C. Wagman, Inc.

SIGNATURE Todd E Baker

TITLE Senior V.P. of Operations

VENDOR NUMBER W002

DBE GOAL FROM BID PROPOSAL 12%

*** Form C-49 not submitted. Design-Build has met the project DBE requirements. Refer to Section 4.35 (a) - C-111 and Section 4.35 (c) - C-112.

Virginia Department of Transportation

Section 4.3.5
C-112
Attachment 4.3.5(c)

WAGMAN

Bridging Generations · Since 1902

COMMONWEALTH OF VIRGINIA
DEPARTMENT OF TRANSPORTATION
CERTIFICATION OF BINDING AGREEMENT
WITH
DISADVANTAGED BUSINESS ENTERPRISE FIRMS

Project No.: (NFO) 0035-087-112, PE-101, RW-201, C-501, B-604

Federal Project No.: BR-087-5 (014)

This form is to be submitted in accordance with the Department's Special Provision for Section 107.15.

It is hereby certified by the below signed Contractors that there exists a written quote, acceptable to the parties involved preliminary to a binding subcontract agreement stating the details concerning the work to be performed and the price which will be paid for the aforementioned work. This document is not intended to, nor should it be construed to, contain the entire text of the agreement between the contracting parties. This document does not take the place of, nor may it be substituted for, an official subcontracting agreement in those situations that may require such an agreement. A copy of the fully executed *subcontract agreement* shall be submitted to the Engineer within fourteen (14) business days after contract execution.

It is further certified that the aforementioned mutually acceptable quote and fully executed subcontract agreement represent the entire agreement between the parties involved and that no conversations, verbal agreements, or other forms of non-written representations shall serve to add to, delete, or modify the terms as stated.

The prime Contractor further represents that the aforementioned mutually acceptable quote and fully executed subcontract agreement shall remain on file for a period of not less than one year following completion of the prime's contract with the Department or for such longer period as provisions of governing Federal or State law or regulations may require. For purposes of this form, the term Prime Contractor shall refer to any Contractor utilizing a DBE subcontractor, regardless of tier, in which they are claiming DBE credit toward the contract goal.

Contractors further jointly and severally represent that said binding agreement is for the performance of a "commercially useful function" as that term is employed in 49 C.F.R. Part 26.55 (c), (d).

TO BE SIGNED BY THE SUBCONTRACTOR TO THE PRIME CONTRACTOR, AND ANY LOWER TIER SUBCONTRACTORS HAVING A CONTRACT WITH THE BELOW NAMED DBE FIRM

Prime Contractor G.A. & F.C. Wagman, Inc

By: Todd E. Becker
Signature
Todd E. Becker

Senior V.P. of Operations
Title

Date: September 5, 2013

First Tier Subcontractor if Applicable Johnson, Mirmiran, and Thompson, Inc.

By: Arthelius A Phaup 2013.09.05 15:06:21 -04'00'
Signature

Vice President
Title

Date: September 5, 2013

Second Tier Subcontractor if Applicable _____

By: _____ Signature _____ Title

Date: _____

Third Tier Subcontractor if Applicable _____

By: _____ Signature _____ Title

Date: _____

DBE Contractor HASSAN WATER RESOURCES, PLC

By: _____ Signature President Title

Date: 9/4/2013

COMMONWEALTH OF VIRGINIA
DEPARTMENT OF TRANSPORTATION
CERTIFICATION OF BINDING AGREEMENT
WITH
DISADVANTAGED BUSINESS ENTERPRISE FIRMS

Project No.: (NFO) 0035-087-112, PE-101, RW-201, C-501, B-604

Federal Project No.: BR-087-5 (014)

This form is to be submitted in accordance with the Department's Special Provision for Section 107.15.

It is hereby certified by the below signed Contractors that there exists a written quote, acceptable to the parties involved preliminary to a binding subcontract agreement stating the details concerning the work to be performed and the price which will be paid for the aforementioned work. This document is not intended to, nor should it be construed to, contain the entire text of the agreement between the contracting parties. This document does not take the place of, nor may it be substituted for, an official subcontracting agreement in those situations that may require such an agreement. A copy of the fully executed *subcontract agreement* shall be submitted to the Engineer within fourteen (14) business days after contract execution.

It is further certified that the aforementioned mutually acceptable quote and fully executed subcontract agreement represent the entire agreement between the parties involved and that no conversations, verbal agreements, or other forms of non-written representations shall serve to add to, delete, or modify the terms as stated.

The prime Contractor further represents that the aforementioned mutually acceptable quote and fully executed subcontract agreement shall remain on file for a period of not less than one year following completion of the prime's contract with the Department or for such longer period as provisions of governing Federal or State law or regulations may require. For purposes of this form, the term Prime Contractor shall refer to any Contractor utilizing a DBE subcontractor, regardless of tier, in which they are claiming DBE credit toward the contract goal.

Contractors further jointly and severally represent that said binding agreement is for the performance of a "commercially useful function" as that term is employed in 49 C.F.R. Part 26.55 (c), (d).

TO BE SIGNED BY THE SUBCONTRACTOR TO THE PRIME CONTRACTOR, AND ANY LOWER TIER SUBCONTRACTORS HAVING A CONTRACT WITH THE BELOW NAMED DBE FIRM

Prime Contractor G.A. & F.C. Wagman, Inc.

By: Todd E. Becker
Signature
Todd E. Becker

Senior V.P. of Operations
Title

Date: September 5, 2013

First Tier Subcontractor if Applicable _____

By: _____
Signature

_____
Title

Date: _____

Second Tier Subcontractor if Applicable _____

By: _____ _____
Signature Title

Date: _____

Third Tier Subcontractor if Applicable _____

By: _____ _____
Signature Title

Date: _____

DBE Contractor Quinn Consulting Services, Inc.

By: Elizabeth Quinn President
Signature Title

Date: August 28, 2013

COMMONWEALTH OF VIRGINIA
DEPARTMENT OF TRANSPORTATION
CERTIFICATION OF BINDING AGREEMENT
WITH
DISADVANTAGED BUSINESS ENTERPRISE FIRMS

Project No.: (NFO) 0035-087-112, PE-101, RW-201, C-501, B-604

Federal Project No.: BR-087-5 (014)

This form is to be submitted in accordance with the Department's Special Provision for Section 107.15.

It is hereby certified by the below signed Contractors that there exists a written quote, acceptable to the parties involved preliminary to a binding subcontract agreement stating the details concerning the work to be performed and the price which will be paid for the aforementioned work. This document is not intended to, nor should it be construed to, contain the entire text of the agreement between the contracting parties. This document does not take the place of, nor may it be substituted for, an official subcontracting agreement in those situations that may require such an agreement. A copy of the fully executed *subcontract agreement* shall be submitted to the Engineer within fourteen (14) business days after contract execution.

It is further certified that the aforementioned mutually acceptable quote and fully executed subcontract agreement represent the entire agreement between the parties involved and that no conversations, verbal agreements, or other forms of non-written representations shall serve to add to, delete, or modify the terms as stated.

The prime Contractor further represents that the aforementioned mutually acceptable quote and fully executed subcontract agreement shall remain on file for a period of not less than one year following completion of the prime's contract with the Department or for such longer period as provisions of governing Federal or State law or regulations may require. For purposes of this form, the term Prime Contractor shall refer to any Contractor utilizing a DBE subcontractor, regardless of tier, in which they are claiming DBE credit toward the contract goal.

Contractors further jointly and severally represent that said binding agreement is for the performance of a "commercially useful function" as that term is employed in 49 C.F.R. Part 26.55 (c), (d).

TO BE SIGNED BY THE SUBCONTRACTOR TO THE PRIME CONTRACTOR, AND ANY LOWER TIER SUBCONTRACTORS HAVING A CONTRACT WITH THE BELOW NAMED DBE FIRM

Prime Contractor G.A. & F.C. Wagman, Inc.

By: Todd E. Becker (signature) Senior V.P. of Operations
Signature Title
Todd E. Becker Date: September 5, 2013

First Tier Subcontractor if Applicable _____

By: _____ _____
Signature Title

Date: _____

Second Tier Subcontractor if Applicable

By: _____ _____
Signature Title

Date: _____

Third Tier Subcontractor if Applicable

By: _____ _____
Signature Title

Date:

DBE Contractor Nickelston Industries, Inc.

By: David A. Hall Corporate Secretary
Signature Title

Date: 9-3-13

COMMONWEALTH OF VIRGINIA
DEPARTMENT OF TRANSPORTATION
CERTIFICATION OF BINDING AGREEMENT
WITH
DISADVANTAGED BUSINESS ENTERPRISE FIRMS

Project No.: (NFO) 0035-087-112, PE-101, RW-201, C-501, B-604

Federal Project No.: BR-087-5 (014)

This form is to be submitted in accordance with the Department's Special Provision for Section 107.15.

It is hereby certified by the below signed Contractors that there exists a written quote, acceptable to the parties involved preliminary to a binding subcontract agreement stating the details concerning the work to be performed and the price which will be paid for the aforementioned work. This document is not intended to, nor should it be construed to, contain the entire text of the agreement between the contracting parties. This document does not take the place of, nor may it be substituted for, an official subcontracting agreement in those situations that may require such an agreement. A copy of the fully executed *subcontract agreement* shall be submitted to the Engineer within fourteen (14) business days after contract execution.

It is further certified that the aforementioned mutually acceptable quote and fully executed subcontract agreement represent the entire agreement between the parties involved and that no conversations, verbal agreements, or other forms of non-written representations shall serve to add to, delete, or modify the terms as stated.

The prime Contractor further represents that the aforementioned mutually acceptable quote and fully executed subcontract agreement shall remain on file for a period of not less than one year following completion of the prime's contract with the Department or for such longer period as provisions of governing Federal or State law or regulations may require. For purposes of this form, the term Prime Contractor shall refer to any Contractor utilizing a DBE subcontractor, regardless of tier, in which they are claiming DBE credit toward the contract goal.

Contractors further jointly and severally represent that said binding agreement is for the performance of a "commercially useful function" as that term is employed in 49 C.F.R. Part 26.55 (c), (d).

TO BE SIGNED BY THE SUBCONTRACTOR TO THE PRIME CONTRACTOR, AND ANY LOWER TIER SUBCONTRACTORS HAVING A CONTRACT WITH THE BELOW NAMED DBE FIRM

Prime Contractor G.A. & F.C. Wagman, Inc.

By: Todd E. Becker (signature) Senior V.P. of Operations
Signature Title
Todd E. Becker Date: September 5, 2013

First Tier Subcontractor if Applicable _____

By: _____ _____
Signature Title

Date: _____

Second Tier Subcontractor if Applicable _____

By: _____ _____
Signature Title

Date: _____

Third Tier Subcontractor if Applicable _____

By: _____ _____
Signature Title

Date: _____

DBE Contractor D.T. READ STEEL CO., INC.

By: _____ PRESIDENT
Signature Title

Date: 8/28/2013

COMMONWEALTH OF VIRGINIA
DEPARTMENT OF TRANSPORTATION
CERTIFICATION OF BINDING AGREEMENT
WITH
DISADVANTAGED BUSINESS ENTERPRISE FIRMS

Project No.: (NFO) 0035-087-112, PE-101, RW-201, C-501, B-604

Federal Project No.: BR-087-5 (014)

This form is to be submitted in accordance with the Department's Special Provision for Section 107.15.

It is hereby certified by the below signed Contractors that there exists a written quote, acceptable to the parties involved preliminary to a binding subcontract agreement stating the details concerning the work to be performed and the price which will be paid for the aforementioned work. This document is not intended to, nor should it be construed to, contain the entire text of the agreement between the contracting parties. This document does not take the place of, nor may it be substituted for, an official subcontracting agreement in those situations that may require such an agreement. A copy of the fully executed *subcontract agreement* shall be submitted to the Engineer within fourteen (14) business days after contract execution.

It is further certified that the aforementioned mutually acceptable quote and fully executed subcontract agreement represent the entire agreement between the parties involved and that no conversations, verbal agreements, or other forms of non-written representations shall serve to add to, delete, or modify the terms as stated.

The prime Contractor further represents that the aforementioned mutually acceptable quote and fully executed subcontract agreement shall remain on file for a period of not less than one year following completion of the prime's contract with the Department or for such longer period as provisions of governing Federal or State law or regulations may require. For purposes of this form, the term Prime Contractor shall refer to any Contractor utilizing a DBE subcontractor, regardless of tier, in which they are claiming DBE credit toward the contract goal.

Contractors further jointly and severally represent that said binding agreement is for the performance of a "commercially useful function" as that term is employed in 49 C.F.R. Part 26.55 (c), (d).

TO BE SIGNED BY THE SUBCONTRACTOR TO THE PRIME CONTRACTOR, AND ANY LOWER TIER SUBCONTRACTORS HAVING A CONTRACT WITH THE BELOW NAMED DBE FIRM

Prime Contractor G.A. & F.C. Wagman, Inc.

By: Todd E. Becker
Signature
Todd E. Becker

Senior V.P. of Operations
Title

Date: September 5, 2013

First Tier Subcontractor if Applicable _____

By: _____
Signature

_____
Title

Date: _____

Second Tier Subcontractor if Applicable _____

By: _____ _____
Signature Title

Date: _____

Third Tier Subcontractor if Applicable _____

By: _____ _____
Signature Title

Date: _____

DBE Contractor Spivey Pavement Markings

By: _____ President
Signature Title

Date: 8/28/13

VDOT

WAGMAN

BRIDGING GENERATIONS · SINCE 1902

JMT®

JOHNSON, MIRMIRAN & THOMPSON

Engineering A Brighter Future®