Copy 1 of 7 Copies - ORIGINAL

Response to Request for Proposals

ROUTE 606 BRIDGE REPLACEMENT OVER I-95 WITH 606 IMPROVEMENTS

Spotsylvania County, Virginia

State Project Nos.:	Route 606 Roadway Improvements (0606-088-653, C501), UPC 105463
	Route 606 Bridge Replacement (0606-088-622, C501, B634), UPC 100829
Federal Project Nos.:	Route 606 Roadway Improvements (STP-5111(272))
	Route 606 Bridge Replacement (BR-5111(237))
Contract ID Number:	C00105463DB89

VOLUME I: TECHNICAL PROPOSAL

Submitted By:

SHIRLEY CONTRACTING COMPANY, LLC

In Association With:

Dewberry®

4.1 - Letter of Submittal

SHIRLEY
CONTRACTING COMPANY, LLC

August 22, 2016

Mr. Stephen D. Kindy, P.E.
Alternate Project Delivery Office
Virginia Department of Transportation
1401 East Broad Street
Richmond, Virginia 23219

RE: Route 606 Bridge Replacement over I-95
with 606 Improvements Projects
Spotsylvania County, Virginia
Contract ID Number: C00105463DB89
4.1- Letter of Submittal

Dear Mr. Kindy:

Shirley Contracting Company, LLC (Shirley), as the Offeror, and Dewberry Consultants LLC (Dewberry), as the Lead Designer, are pleased to submit our Team's Technical Proposal for the Route 606 Bridge Replacement over I-95 with 606 Improvements Project (the Project). The strength of our Team's unique alternate intersection design concept, an "Offset Diamond Interchange", will provide VDOT with an unequaled level of assurance that the Project is completed successfully and exceeds the priorities established while limiting the risk to VDOT, the public and project stakeholders. We are excited for this opportunity and look forward to continuing our partnership with VDOT.

4.1.2 - 4.1.3 Declarations: Should Shirley be selected, it is our intent to enter into a contract with VDOT for the Project in accordance with the terms of the Request for Proposals (RFP). Further, the offer represented by our Technical and Price Proposals will remain in full force and effect for one hundred twenty (120) days after the date this Technical Proposal is submitted to VDOT.

4.1.4 - Point of Contact: Garry A. Palleschi, Vice President
Shirley Contracting Company, LLC,
8435 Backlick Road, Lorton, VA 22079
703.550.3579 (P), 703.550.9346 (F)
gpalleschi@shirleycontracting.com

4.1.5 - Principal Officer: Michael E. Post, President/CEO/Manager
Shirley Contracting Company, LLC
8435 Backlick Road, Lorton, VA 22079
703.550.8100 (P)

4.1.6 - Unique Interim Milestone Date: November 1, 2018
Final Completion Date: September 18, 2019

4.1.7 - Proposal Payment Agreement: An executed Proposal Payment Agreement, Attachment 9.3.1 is included in the Appendix.

4.1.8 - Certification Regarding Debarment: Signed Certification Regarding Debarment Forms are included in the Appendix.

On behalf of the entire Shirley/Dewberry Team, we thank VDOT for the opportunity to submit this Technical Proposal and look forward to your favorable review.

Sincerely,

Michael E. Post
President/CEO/Manager
Shirley Contracting Company, LLC

4.2 - Offeror’s Qualifications

4.2 - Offeror’s Qualifications

4.2 Offeror's Qualifications

4.2.1 Confirmation

We confirm that the information contained in our Statement of Qualifications (SOQ) remains true and accurate in accordance with Part 1, Section 11.4.

4.2.2 Organizational Chart

The Project Organizational Chart below identifies the "chain of command" and major functions to be performed and their reporting relationships in managing, designing and constructing the Project, including quality control/quality assurance. As there are no changes from our SOQ submittal, an updated narrative is not required.

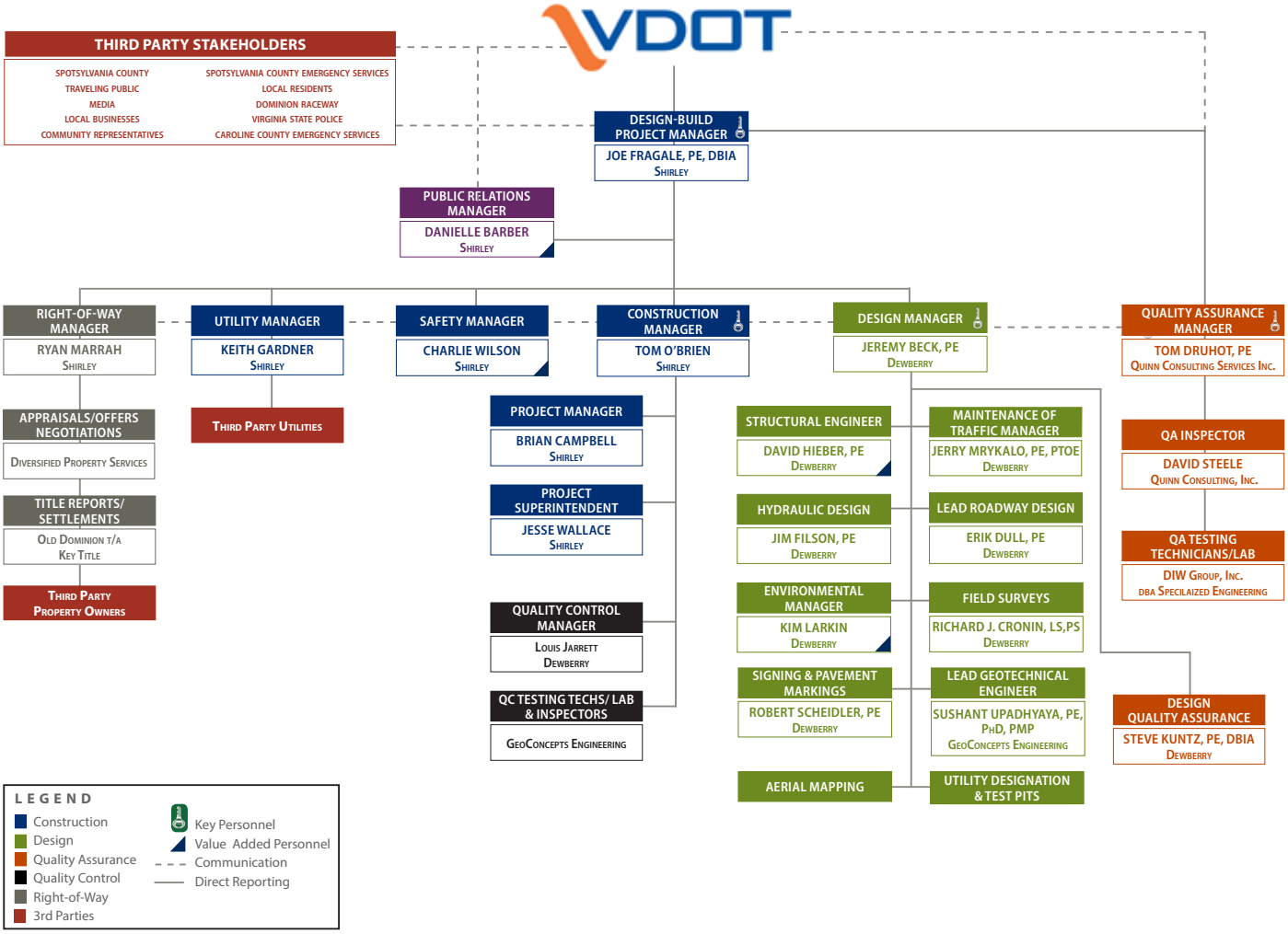

4.3 - Design Concept

4.3 - Design Concept

4.3 Design Concept

Introduction

The Route 606 Bridge Replacement over I-95 with 606 Improvements Project (the Project) represents a unique and exciting opportunity for the Shirley/Dewberry Team to develop a creative solution to the challenges that exist at this interchange. Drawing upon our extensive design-build experience, our Team is pleased to present our innovative conceptual plan for an ***"Offset Diamond Interchange"*** that ***exceeds the Project priorities of lowest cost, efficient design, limited construction impacts, and minimization of risks to all stakeholders.*** An exhibit highlighting our Conceptual Plan upon which our Technical Proposal is based is attached as Exhibit 4.3.1.1 on the following page.

Our Team began the process to develop our unique concept by holding numerous "brain-storming" sessions with all team disciplines involved. Starting with the RFP Roundabout option, we vetted more than six options for the interchange, carefully considering the advantages and disadvantages of each. We then reviewed many of these with VDOT in our Proprietary Meeting, obtaining valuable feedback that allowed us to refine these concepts further. We ultimately selected the ***"Offset Diamond Interchange"*** as the solution that solved a majority of the Project challenges with little-to-no disadvantages.

As shown on Exhibit 4.3.1.1, our concept offsets the northbound I-95 on/off-ramps to a signalized intersection on Mallard Road south of Route 606. Existing Mallard Road is then improved and realigned with the entrance to Dominion Raceway at a signalized intersection with Route 606. With this configuration, the Route 606 roundabout and Relocated Mallard Road shown in the RFP have both been eliminated.

The substantial benefits of our concept include:

- ✓ Improved traffic operations and safety for motorists and larger vehicles;
- ✓ Improved accessibility to raceway events and businesses;
- ✓ Single-phase (and smaller) bridge construction, and elimination of the bridge joint;
- ✓ Minimized risk of impacts to the existing bridge;
- ✓ Eliminated 85% of total right-of-way required;
- ✓ Complete avoidance of the Virginia Outdoor Foundation (VOF) easement;
- ✓ Reduced environmental impacts;
- ✓ Mitigation of hazardous material risk;
- ✓ Decreased utility impacts;
- ✓ Elimination of all stormwater ponds;
- ✓ Reduced VDOT's long-term maintenance costs;
- ✓ Minimized construction costs; and
- ✓ Shortened construction schedule.

In addition to the benefits outlined above, our Technical Proposal is fully compliant with the RFP in that it:

- Meets or exceeds all requirements listed in the Design Criteria Table;
- Ensures limits of construction, to include stormwater management facilities, are within the existing/proposed right-of-way limits shown in the RFP Conceptual Plans and the "Right of Way and Easements Limitations.pdf" file with the exception of permanent and temporary easements; and
- Does not include design elements that require Design Exceptions and/or Design Waivers unless they are identified or included in the RFP or Addendum.

PROJECT MANAGER
SURVEYED BY, DATE
DESIGN BY Dewberry Consultants,LLC · (703) 289-4796
SUBSURFACE UTILITY BY, DATE

OFFSET DIAMOND INTERCHANGE LAYOUT
EXHIBIT 4.3.1.1

REVISED	STATE	STATE ROUTE	STATE PROJECT	SHEET NO.
	VA.	606	(NFO)0606-088-653 C-501 0606-088-622 C-501,B-634	

DESIGN FEATURES RELATING TO CONSTRUCTION OR TO REGULATION AND CONTROL OF TRAFFIC MAY BE SUBJECT TO CHANGE AS DEEMED NECESSARY BY THE DEPARTMENT

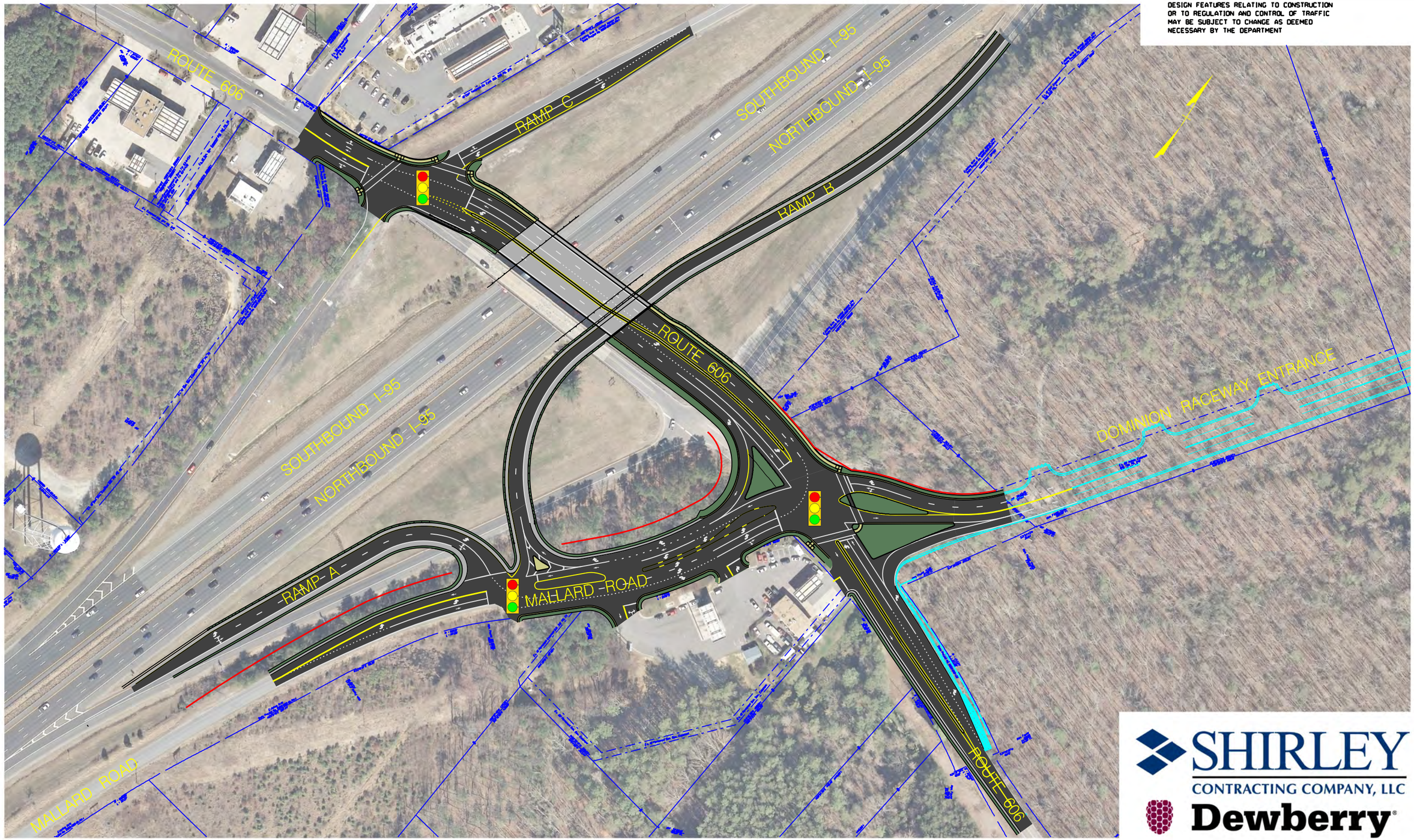

SHIRLEY CONTRACTING COMPANY, LLC
Dewberry

	PROJECT	SHEET NO.
	0606-088-653 0606-088-622	

4.3.1 Conceptual Roadway Plans

Discussions and explanations of the enhancements and benefits of our proposed concept are outlined in the following sections and are shown graphically in our Volume II - Conceptual Roadway Plans (Volume II).

(a.) General Geometry

The general geometry of each of the roadways and ramps included in our "Offset Diamond Interchange" has been developed in accordance with the criteria identified in Attachment 2.2 of the RFP documents. The general geometry proposed for Route 606 between Dan Bell Lane and Mallard Road is based on Urban Collector (GS-7) criteria with a 35mph design speed. The lane configuration consists of a 4-lane median divided section with a 12' travel lane adjacent to the median and a 14' travel lane adjacent to the outside curb and gutter ("closed") section. A 5' sidewalk will be constructed along the north side of Route 606, including signalized pedestrian access at the interchange ramps west of I-95 and the Mallard/Raceway intersection east of I-95.

East of Mallard Road, Route 606 transitions to a 2-lane median divided roadway and ultimately to a 2-lane undivided facility to match existing conditions just west of the VDOT property. Route 606 within these limits will also be based on 35mph GS-7 criteria, but utilize "open" shoulders and ditches on the outside to match existing conditions. ***Our Team's concept eliminates all impacts to the Virginia Outdoor Foundation (VOF) easement and allows the recently constructed right turn lane and retaining wall approaching the Dominion Raceway entrance to be maintained.***

With our Team's concept, the entrance to Dominion Raceway has been realigned directly across from a widened Mallard Road. Both of these roadways are designed in accordance with Urban Local (GS-8) criteria with a design speed of 30mph. ***One of our many enhancements is to provide 12' travel lanes on Mallard Road, exceeding the 10' minimum width provided by the RFP.*** Mallard Road consists of a single thru lane in each direction, but the addition of turn lanes at the intersection with Route 606 results in a total of 5-lanes with a flush/striped median to accommodate a southbound left turn lane into the gas station immediately south of Route 606. Edge treatment on Mallard Road consists of both curb and gutter and open shoulder designs, with curb and gutter being utilized to match the existing configuration adjacent to the gas station and thus reducing grading impacts on the property.

In order to accommodate the realignment of the Dominion Raceway entrance, the northbound I-95 entrance ramp has been reconfigured to intersect Mallard Road south of Route 606. This ramp, identified as "Ramp B", then turns north, running under the Route 606 Bridge before matching the existing ramp alignment prior to connection with northbound I-95. The exit ramp from northbound I-95, identified as "Ramp A", has also been realigned to intersect Mallard Road at the same signalized intersection as Ramp B. Both interchange ramps consist of a single 16' travel lane or two 12' travel lanes to accommodate the necessary turning movements and storage capacity at the intersection with Mallard Road. Paved shoulder widths of 4' and 8' will be utilized on the left and right sides of the ramps respectively, with an additional left paved shoulder width of 2' provided adjacent to guardrail.

(b.) Horizontal Alignments

A major advantage of our unique concept is the elimination of the risk of impacts to the existing bridge during construction. With our Team's concept, the horizontal alignment for Route 606 has been shifted approximately 65' to the north as compared to the RFP concept. This allows the construction of the entire bridge in a single stage without impacting the existing bridge superstructure or foundations. The horizontal alignment of Route 606 was developed to meet the criteria of a 35mph design speed, and a minimum horizontal curve radius of 500' located just west of the bridge allows us to utilize normal crown per TC-5.11ULS criteria. This results in the avoidance of superelevation transitions on the bridge or the need to superelevate any portion of Route 606.

Our Team's concept for Mallard Road provides a single, signalized intersection on Route 606 and aligns with a relocated Dominion Raceway entrance. This revised horizontal alignment provides direct access to Mallard Road and the raceway. The horizontal alignment for Mallard Road and the realigned portion of the Dominion Raceway entrance is based on a 30mph design speed in accordance with TC-5.11ULS criteria. Mallard Road will be widened to both the east and west to create the necessary number of turn lanes, and the Dominion Raceway entrance will be widened and a new median incorporated to retain as much of the recently constructed pavement as possible.

Ramps A and B were designed with a 35mph design speed per GS-R criteria, although higher design speeds near the connections with I-95 are provided to account for the deceleration or acceleration necessary for exiting from and entering onto I-95. The radii closest to Mallard Road on Ramps A and B accommodate speeds of 25mph and 30mph respectively. These radii are compatible with the stop or turning configuration at the signalized intersection, and consistent with our Proprietary Meeting discussions. Ramp B also accommodates the future widening of northbound I-95 to 4-lanes without future modification of the ramp, as shown on page 48 of Volume II.

Alignment Benefits Of Our Concept

Our unique concept provides numerous benefits including:

- ***Less Risk To Existing Bridge –*** by shifting Route 606 to the north, the proposed bridge can be constructed completely "off-line" from the existing bridge, avoiding impacts during construction and improving safety.
- ***Immediate Opening of All Lanes –*** in the RFP concept, the westbound lanes of Route 606 were constructed to accommodate 2-lanes, but only one was opened across the new bridge. With our improved alignment, and by extending the second westbound lane to the intersection with Dan Bell Lane, we are able to open two westbound lanes across the bridge.
- ***Improved Operations of Eastbound Route 606 –*** in the RFP concept, eastbound thru traffic on Route 606 was required to shift a lane to the right to accommodate double left turns onto the northbound I-95 entrance ramp. By reconfiguring the interchange to allow a free-flow right turn movement for eastbound to northbound traffic, this lane shift is eliminated. Eastbound thru traffic continues in the left eastbound lane through the entirety of the Project limits, and traffic destined for northbound I-95 is accommodated in the right lane, which opens immediately prior to the southbound I-95 entrance ramp, and then continues along Mallard Road without the need to stop at signalized intersections.
- ***Improved Mallard Road/Dominion Raceway Connectivity –*** by directly connecting Mallard Road and Dominion Raceway (Figure 4.3.1.1), we provide a single local road network east of I-95 that accommodates all turning and thru movements. Access to local businesses and the raceway are optimized, and U-turn and right-in-right-out entrances were eliminated and replaced with a single, full access, signalized intersection.

Figure 4.3.1.1 - The existing offset between Mallard Road and Dominion Raceway is eliminated with our concept.

(c.) Maximum Grade

A benefit of our unique concept is that we can develop a new vertical profile for Route 606 that meets VDOT and AASHTO criteria while also considering Temporary Traffic Control (TTC) operations and construction staging of the interchange ramps and widened/realigned Mallard Road. Maximum proposed vertical grades for each roadway alignment compared with AASHTO maximum grades allowed for Rolling Terrain are identified in Table 1.

Minimum grades of 0.5% have also been incorporated for each roadway or ramp alignment to ensure positive drainage and avoid localized low points along curb returns and in entrances to adjacent properties.

Table 1 - Maximum Grades

Alignment	Maximum Grade Proposed	Maximum Grade Allowed by AASHTO
Route 606	3.80%	10%
Mallard Road	3.00%	11%
Dominion Raceway	4.61% (match existing)	11%
Ramp A	1.00%	6%
Ramp B	5.00%	6%

(d.) Typical Sections

The general geometry of each roadway segment is described in Section (a) above, and typical sections for each alignment are included in Volume II. In general, Route 606 within the limits of the interchange has been designed as a 4-lane median divided curb and gutter section and a raised sidewalk along the north side of the roadway and bridge. The bridge over I-95 will provide one 12' lane and one 14' lane in each direction. A single, 12' wide left turn lane (to either the southbound I-95 entrance ramp or the Dominion Raceway entrance) will be provided adjacent to a 4' raised concrete median. More details of the bridge typical section are provided in Section 4.3.2.

Figure 4.3.1.2 - The existing retaining wall and pavement widening recently constructed for the Dominion Raceway will be retained, avoiding additional private property impacts, VOF easement impacts, and utility relocations.

East of Mallard Road, Route 606 accommodates a single thru lane in each direction, and retains much of the widened pavement which was recently completed for the Dominion Raceway entrance. Mallard Road has a varying number of lanes to accommodate thru, right, and left turn lanes at the interchange ramps and approaching Route 606, and curb and gutter is proposed on the east side to minimize property impacts while a paved shoulder is proposed on the west side. Interchange ramps provide a single lane entrance/exit to/from I-95, with an additional lane on each ramp provided at the intersection with Mallard Road. Paved shoulders are proposed on both the right and left sides of the interchange ramps.

Since our Team's concept eliminates the widening of Route 606 east of Mallard Road, we have eliminated the need to reconstruct the retaining wall along the north side of Route 606 adjacent to the VOF easement (Figure 3.2.1.2). Instead, the existing retaining wall constructed as part of the Dominion Raceway entrance will be retained, and no additional fill, loading, or modifications are proposed to that structure.

Typical Section Benefits of our Concept

Benefits of our proposed typical sections include:

- ***Avoidance Of The Existing Bridge*** – by reconfiguring the interchange, only 2-lanes are required along eastbound Route 606. This modification, combined with our shift in the horizontal alignment, allowed us to locate the proposed bridge out of conflict from the existing bridge while also enabling our Team to construct the bridge in a single stage of construction. Based on the condition of the existing bridge, avoiding temporary impacts and maximizing the separation between the existing and proposed bridge during construction is a major enhancement which has eliminated one of the critical risks.
- ***Improved Mallard Road*** – while the RFP and geometric standards for Mallard Road require 10' minimum lane widths,

Figure 4.3.1.3 - Existing lanes on Mallard Road will be widened to 12' and turn lanes will be added to provide full access to and from Route 606 and the Dominion Raceway.

our Team's concept provides 12' lanes on Mallard Road for the entire limits of improvement. These widened lanes will accommodate trucks and large vehicles to and from northbound I-95, and improve access to the gas station, raceway, truck auto body shop, and RV sales businesses further south on Mallard Road (Figure 4.3.1.3 on the previous page).

(e.) Conceptual Hydraulic and Stormwater Management Design

The unique concept proposed by our Team greatly reduces the amount of drainage facilities and ***eliminates all stormwater management facilities.*** When developing our drainage concept, we considered key elements such as long-term maintenance, ease of installation, and proper conveyance of onsite and offsite flows, while also assuming all existing facilities which will be used as part of the permanent drainage design are unserviceable in accordance with Part 2, Section 2.7.1.

Roadway Drainage

The proposed roadway drainage system is shown in Volume II. Roadway drainage required for our concept includes open channels, culverts, curb inlets, yard inlets, and storm sewer systems to convey surface runoff to adequate outfalls. Underdrain systems will be used to maintain subbase drainage and avoid saturation of pavement structure. Storm sewer systems, ditches, and culverts were designed considering the criteria below:

- Efficient removal of pavement drainage from travel ways and surrounding paved areas;
- Eliminate and avoiding ponding hazards;
- Maintain offsite flow through the Project;
- Accommodate the ultimate widening of I-95;
- Reduce deep installations to avoid impacts and exposure to acidic soils; and
- Avoid exposure to contaminated soils at existing and former gas stations.

At approximate Route 606 Station 127+00, the existing 12" culvert is proposed to be replaced since widening and realignment of Route 606 would otherwise bury the ends of the existing culvert. All of our proposed storm drainage inlets and pipes will be in compliance with VDOT PC-1 criteria. Acidic soils have been avoided by all of our proposed storm sewer systems since the new roadways will be constructed in fill, thereby avoiding deep excavations for storm sewer installation. Along northbound I-95 and Ramp B, a storm sewer system will convey onsite and offsite flow, and is located such that future widening of I-95 will also not require relocation or adjustment of the proposed pipes. We have already completed a visual inspection of the existing 42" pipe beneath I-95 and it appears to be in good condition. Following Award of the Contract, a video inspection of the existing culvert will be completed to confirm and document its structural integrity.

Stormwater Management

In accordance with the RFP, stormwater management (SWM) will be in accordance with Virginia Department of Environmental Quality (DEQ) II-C Criteria and II-B Criteria (9VAC25-870) for UPC 100829 and UPC 105463, respectively. SWM for the UPC 100829 portion will follow Performance Based Methodology (9VAC25-870-96) and MS-19 Adequate Outfall Criteria (9VAC25-870-97 & 9VAC25-870-98), and SWM for the UPC 105463 project portion will follow the Virginia Runoff Reduction Methodology (9VAC25-870-65) and Channel and Flood Protection Criteria (9VAC25-870-66); in accordance with VDOT Instructional and Informational Memoranda – Location and Design (IIM-LD) – 195.8 and Chapter 11 – Stormwater Management Section of the VDOT Drainage Manual.

Stormwater Management Benefits of our Concept

A distinct advantage of our unique concept is the elimination of the two RFP stormwater management basins and all associated outlet channel grading. ***This reduces much of the right-of-way acquisition, avoids***

environmental impacts to existing wetlands and streams, and reduces VDOT's long-term maintenance costs. With our concept, both portions of the Project's water quality post-construction phosphorus control requirements fell under 10 pounds per year, requiring only 2.0 pounds for UPC 100829 and 5.3 pounds for UPC 105463. Accordingly, our stormwater management concept is based on purchasing nutrient credits for a total of 7.3 lb/yr. for the overall project. We have already investigated the ability to purchase these credits, and confirmed they are available from credit banks established in the York River Basin.

> In addition to simplifying the design approach and methodologies through purchase of nutrient credits, we have also reduced construction costs and long-term maintenance costs for VDOT.

To address water quality requirements, our Team has strategically routed existing drainage systems and designed proposed drainage systems to convey all runoff to man-made conveyance systems meeting the II-B Channel and Flood Protection Criteria and II-C MS-19 Criteria. The majority of project runoff will be routed and discharged into a concrete lined roadside ditch (man-made drainage system) running along northbound I-95 within the VDOT right-of-way. ***Our strategy for project runoff eliminates the need for detention ponds and additional runoff reduction volume best management practices (BMP).***

(f.) Proposed Right-of-Way Limits

The right-of-way required for completion of our concept is shown in Volume II, along with shading to show the areas of reduced right-of-way impacts as compared with the RFP concept. In accordance with the RFP requirements, our concept is contained within the existing/proposed right-of-way limits shown in the RFP Conceptual Plans and the "Right-of-Way and Easements Limitations.pdf" file with the exception of permanent and temporary easements.

Right-Of-Way Benefits Of Our Concept

Our concept results in a large reduction of right-of-way impacts as compared to the RFP concept. ***As shown in Table 2, our concept eliminates impacts to three properties and avoids acquisition of 85% of the RFP expected right-of-way.***

Table 2 - Right-of-Way Savings

	RFP Design	Our Concept
Total Parcels Impacted	12	9
Parcels Impacted by ROW Acquisition	7	2
Amount of Right-of-Way Required	5 Acres	0.75 Acres

In addition to the right-of-way acquisition benefits, our concept also eliminates all impacts to the VOF easement located north of Route 606 and east of the Dominion Raceway entrance. By reconfiguring the roadway improvements, our concept retains the existing wall and turn lane pavement, thereby avoiding easement acquisitions which were necessary for the RFP concept. ***We have also avoided the utility easement impacts in this area, further reducing cost and schedule risk.***

Our concept also allows for proposed limited access (L/A) line adjustments to be simplified within the proposed interchange, avoiding extension of L/A lines along multiple private properties on Route 606. ***By adjusting the L/A line and maintaining it on the west side of Mallard Road, property access points have been maintained for five properties, and utility relocations, for the specific purpose of locating them outside of new limited access, have been avoided.***

(g.) Proposed Utility Impacts

A detailed discussion of our approach to utility impact avoidance and relocations is contained in Section 4.4.2. Recognizing the schedule, easement, and cost implications of relocating numerous utilities, our unique concept was focused on avoiding existing utilities and eliminating the numerous relocations which were required by the RFP concept. Since L/A lines will be adjusted within the existing interchange, in close proximity to the

current L/A line, the need to relocate utilities outside of new L/A has been eliminated. ***This has avoided relocations of water, fiber optic, and sanitary sewer facilities on both Route 606 and Mallard Road.***

(h.) Soundwall Locations

As noted in Part 2, Section 2.4.9, no noise mitigation is proposed as part of this Project, and soundwall locations are therefore not depicted in Volume II or anticipated as part of the scope of this Project.

i. Other Key Project Features

As described in detail above, and as shown in Volume II, we believe that the interchange configuration and improvements made to Mallard Road provide numerous benefits to VDOT and the traveling public. However, we recognize that this unique concept hasn't been through the public or Interchange Modification Report (IMR) process as required by VDOT and Federal guidelines. Accordingly, our Team will complete these tasks as part of preliminary design efforts following Award of the Contract. Since our Team has completed this exact process on another design-build project post-award (Fairfax County Parkway, Phase III for VDOT and FHWA Eastern Federal Lands Highway Division), we know we will be successful in completing the necessary steps prior to plan approval, right-of-way acquisitions, and ultimately construction. This process represents a key project feature, and our approach is described below.

Interchange Modification Report (IMR)

Concurrent with the public outreach process, we will initiate the IMR process in coordination with VDOT and Spotsylvania County to gain concurrence from Federal Highways. Information required for development of the IMR, as noted in IIM-LD-200.8, will be developed by Dewberry in order to address the eight Policy Points outlined by FHWA and needed for approval. Based on our analysis of our concept, and given that the interchange ramp connection points to I-95 are not being modified, the operation of I-95 will not be impacted and therefore approval of the IMR should be a straightforward process. Documentation required as part of the IMR including traffic and operational analysis, safety analysis, environmental impacts (and reductions thereof based on our concept), right-of-way impacts (and reductions as a result of our concept), and signing and marking plans will all be provided as part of the IMR for approval by VDOT and Federal Highways. We will complete the IMR process concurrently with survey, design, and public outreach activities, and will therefore not impact the plan approval schedule for the Project. We anticipate a nine month IMR process, which is reflected in our proposal schedule.

Public Outreach

With the progress made developing our design to this stage, our Team, working in coordination with VDOT and Spotsylvania County, will immediately initiate the public outreach efforts necessary to gain approval for the modified interchange design. Since the proposed improvements impact less right-of-way and environmental concerns as compared to the RFP, we expect that a Public Information Meeting will be adequate to satisfy the public outreach efforts. Conceptual plans, typical sections, right-of-way impact exhibits, and pavement marking exhibits will be utilized to convey the message of the modified interchange concept to the public. Although not required, comments will be recorded and modifications incorporated to the fullest extent possible while still remaining within the limitations of the Contract. Public notices will be made well in advance (at least 30 days) of the Public Information Meeting so that attendance and input from the public is maximized.

4.3.2 Conceptual Structural Plans

As part of our unique concept, our Team has developed a bridge design which benefits the end users, minimizes impacts by accelerating construction, and provides a durable, low maintenance structure for VDOT. The bridge that our Team has developed has the following benefits/enhancements from the RFP while also meeting all requirements of the RFP:

- Moves the bridge north of existing (and as compared to the RFP) and allows single stage construction;
- Requires two fewer girder lines as compared to the RFP;
- Avoids construction impacts to the existing bridge; and
- Reduces the size of the bridge, thereby reducing both construction and long-term maintenance costs.

Our conceptual structural plans are included in Volume II.

Bridge Layout

Our Team considered multiple span configurations to develop a solution that considered proximity of the new bridge to the existing bridge, constructability, initial cost, and long term maintenance cost. We determined that a two span configuration results in the best bridge for our Team's interchange concept. Even though our interchange concept adds an auxiliary lane under the bridge, we are still able to reduce the bridge length from 240' shown in the RFP concept to 229'. Our interchange concept allows us to reduce the width of the bridge from 100' shown in the RFP to 82' by eliminating a turn lane on the bridge and the sidewalk on the south side (as allowed by Addendum 2 to the RFP). This allows us to eliminate the first of two lines of girders. Another advantage to our interchange concept is that we are able to move the new bridge further north, allowing us to construct it in a single stage, unlike the RFP concept which required two stage construction. A comparison of the proximity of the new bridge to the existing bridge for both the RFP concept and our unique design is shown in Figures 4.3.2.1 and 4.3.2.2. The ability to construct the new bridge in one stage is a significant safety improvement since it does not require an intermediate stage with traffic in narrower, temporary lanes with minimal temporary shoulders. ***These changes not only reduce the initial cost of the bridge and increase safety during construction, but the 12% reduction in bridge area will reduce the long term maintenance cost of the bridge.***

Our bridge configuration also takes into account the future addition of a 4th general purpose lane in each direction on I-95 as well as accommodates a future widening of the bridge to add one lane in each direction.

Figure 4.3.2.1 - RFP Design (2 Stage Construction)

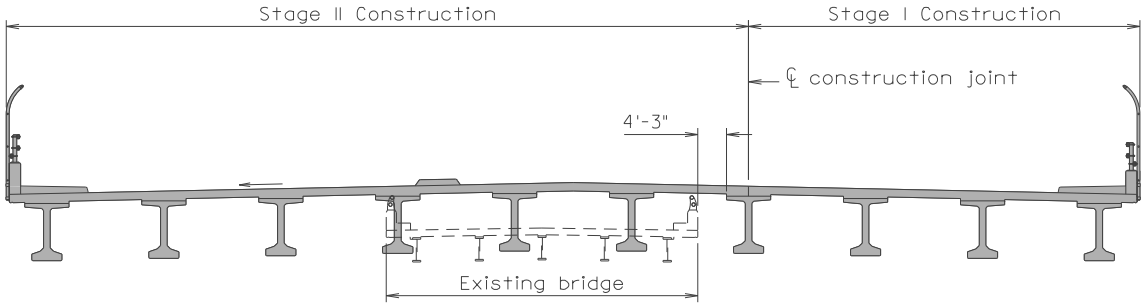

Figure 4.3.2.2 - Proposed Shirley Team Design (1 Stage Construction)

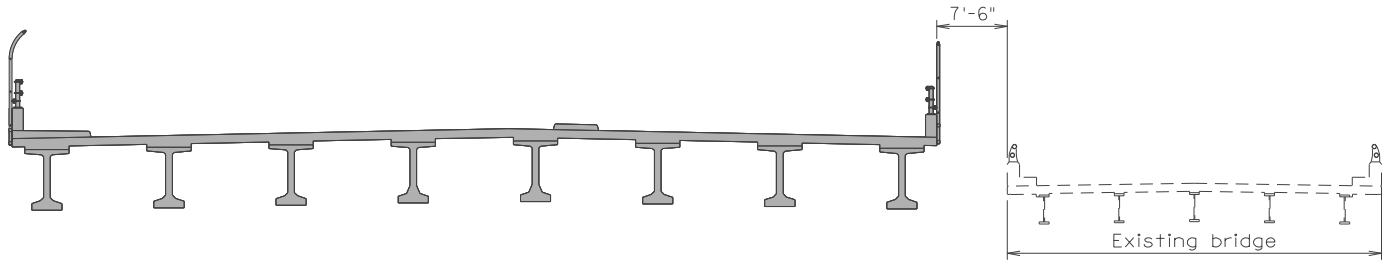

Figure 4.3.2.3 - RFP Design (Typical Transverse Section)

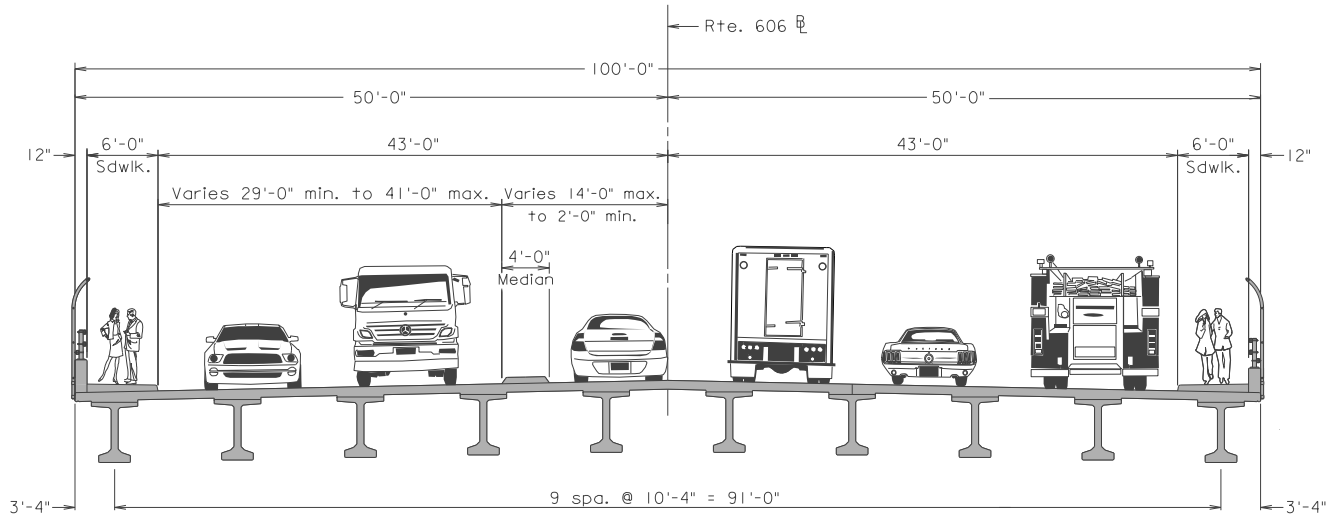

Figure 4.3.2.4 - Proposed Shirley Team Design (Typical Transverse Section)

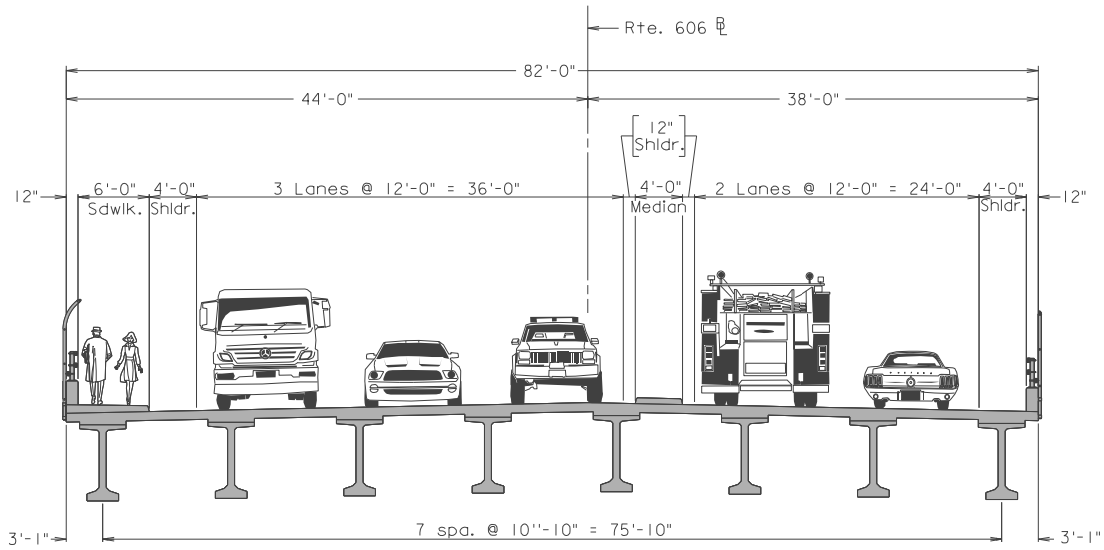

Superstructure

Based on the length of the bridge and the selection algorithm in the Manual of the Structure and Bridge Division, a full-integral abutment is required to provide a jointless bridge. Even though the width of the bridge in our concept is 82', our Team will provide VDOT with justification to eliminate the longitudinal joint as allowed by Addendum 2 to the RFP. A comparison of the RFP transverse section and our Team's transverse section is shown in Figures 4.3.2.3 and 4.3.2.4, reflecting the elimination of two lines of girders, no longitudinal joint, and the sidewalk along only the north side of the bridge. ***Without the longitudinal joint, we will provide VDOT with a truly jointless bridge, eliminating the potential for long-term maintenance issues.*** Additional benefits are that the joint won't be located partially within the left turn lane, and we can ***eliminate the second of two lines of girders.*** These enhancements improve safety for motorcyclists who could be affected by the longitudinal joint, and also reduces the initial construction and long-term maintenance cost of the bridge.

Our Team considered both steel and concrete girders for this bridge. The advantages and disadvantages of each of the alternatives are listed in Table 3.

Table 3 - Superstructure Alternatives

ALTERNATIVE	ADVANTAGES	DISADVANTAGES
Prestressed concrete Bulb-T girders	▪ Fast delivery times ▪ Fast erection times ▪ Low maintenance costs ▪ Low initial cost ▪ Single section to erect per span, minimizing I-95 traffic interruption ▪ No painting required	▪ Long one piece girders to transport ▪ Heavy sections to lift/install (requires larger crane) ▪ Large dead loads increase foundation requirements ▪ Deep section height increases profile
Steel plate girders utilizing Grade 50, weathering steel	▪ Light field sections ▪ Light/Small foundations ▪ Shallow section allows lower profile ▪ No painting with weathering steel	▪ Long Fabrication/delivery times ▪ Require a number of field sections to erect, resulting in additional I-95 traffic interruption ▪ Larger dead load deflections than concrete girders ▪ High initial cost compared to concrete ▪ High maintenance costs compared to concrete Bulb-T beams

After considering all of these factors, our Team is proposing to use Prestressed Concrete Bulb-T beams. The lower initial and long-term costs coupled with the reduced impact to I-95 traffic during construction makes this the preferred option.

Other details including light poles, conduit, and architectural treatments will be provided as required by the RFP.

Substructure

One of the major risks of this Project is the extremely poor condition of the existing bridge as can be seen in Figure 4.3.2.5. Any impacts to the bridge during construction, such as vibrations, could easily result in the premature closure of this critical I-95 crossing. Mitigating this risk has been a hight priority focus of our Team from the beginning of the RFQ. In developing our interchange concept, our goal was to locate the new bridge farther away from the existing bridge than the RFP concept, thus eliminating impacts associated with vibrations from driving piles. We have determined, based on the preliminary geotechnical report included in the RFP, that vibrations from piles driven more than 10' from the existing piers will have no adverse effects on the existing structure. Our concept locates the new abutments and pier greater than 10' from any of the existing abutments and piers, thus eliminating the vibration concern. Another potential solution for eliminating vibration impacts is to utilize drilled shafts at the pier. This option will be considered during final design after additional geotechnical investigations have been completed.

Figure 4.3.2.5 - Existing Route 606 Bridge

Our proposed bridge consists of two spans supported by a multi-column pier and full-integral, cast-in-place concrete abutments behind MSE walls. Based on our review of the preliminary geotechnical information provided, both the abutments and pier are anticipated to be supported on deep foundations (H-piles or drilled

shafts), however the final foundation type will be dependent upon the design geotechnical investigation and analysis. We recognize the potential issues associated with the interface between MSE walls and full-integral abutments. We will incorporate details that are effective in isolating the MSE wall from the movement of the abutments, thus eliminating cracking of the wall and coping and removing one more maintenance concern from our proposed bridge.

Our concept of moving the entire bridge north of the RFP alignment allows us to construct the entire bridge in one stage and has the further benefit of requiring one fewer pier column than if the bridge were constructed in two stages. This reduces initial cost, construction time and future maintenance cost of the pier. The pier will be designed to permit jacking and replacement of the bearings during future maintenance cycles.

Substructure elements located within the clear zone will be protected in accordance with VDOT and AASHTO requirements, and architectural treatments will be incorporated as required by the RFP.

Material Selection, Maintenance & Construction Considerations

The bridge proposed by our Team was developed to simplify construction and reduce the overall size in an effort to reduce future maintenance and inspection cost. Our proposed bridge reduces the overall footprint of the bridge by approximately 12% when compared with the RFP concept. This smaller bridge with fewer elements (e.g. fewer girder lines, fewer pier columns) coupled with the selection of Prestressed Concrete Bulb Tee girders, a jointless bridge, low permeability and low cracking concrete and corrosion resistant reinforcing steel, will provide the Department with improved long-term performance and reduced long-term maintenance of this bridge.

Retaining Walls

Our concept does not require construction of any new retaining walls or require modification of the existing retaining wall along the frontage adjacent to the VOF easement.

Major Drainage Structures

No major drainage structures are required for our concept, including stormwater management basins or associated riser structures.

4.3.3 Alternate Intersection Design Operational Analysis

In accordance with VDOT's response to our Proprietary Meeting topics, and as noted in Part 2, Section 2.2.1 of Addendum 3 of the RFP, our Team has prepared an operational analysis for our proposed alternate interchange configuration and intersection design. This information is provided on a separate CD, and contains the following elements:

- Electronic files (VISSIM) for 2038 AM and PM Build Scenarios; and
- A technical memo explaining our assumptions, methodology, input values, and exhibits comparing our concept's operation to that of the Build Alternative Analysis Report for the RFP configuration.

Please refer to the package provided separately for additional explanation related to our Team's alternate interchange configuration and operational analysis. This Technical Memo confirms that our Team's ***"Offset Diamond Interchange"*** operates "equally as well as or better than the RFP Concept".

4.4 - Project Approach

4.4 Project Approach

4.4.1 Environmental Management

Our Team's approach to environmental management is based on full integration with all disciplines including design, utilities, right-of-way, and construction, to ensure all details of the Project are properly coordinated and scheduled. Our Team began this coordination during the RFP phase and will continue through project completion. This is critical to ensure that all necessary permits and constraints are identified at the earliest possible stage of Project development, appropriate durations are allowed for obtaining permits, final design is completely contained within the areas investigated through the permit process, and construction is completed in accordance with permit requirements and restrictions. This integrated process is illustrated in Table 4, and ensures that risk and costs associated with schedule impacts are avoided:

Table 4 - Integrated Environmental Concepts

INTEGRATE →	IDENTIFY →	COORDINATE →	EDUCATE →	COMMUNICATE
Our Team is fully integrated into the Design-Build process from development of this Technical Proposal to final acceptance with direct input into design, ROW, utility, and construction disciplines. We proactively avoid and minimize impacts, and create a realistic project schedule that mitigates the potential for delays and ensures compliance.	**Early identification of project constraints, survey limits and environmental commitments during the RFQ/RFP stage facilitates avoidance and minimization of potential impacts and Recognized Environmental Conditions across the Project implementation.**	**Proactive coordination with the entire Project Team. Regular Meetings with VDOT and early regulatory agency coordination regarding project impacts and methods to refine avoidance and minimization opportunities, address LEDPA concerns and determine schedule efficiencies. This provides the foundation for project permit acquisition.**	**Education by the Team across disciplines facilitates creative and innovative solutions to perform the work in an environmentally responsible manner, while meeting schedule and project goals.**	**Constant communication across disciplines ensures environmental compliance. RFI's are reviewed by all disciplines to ensure when minor ROW plan or field changes are requested. These changes do not violate existing permits and authorizations, and if modifications are necessary they are coordinated prior to action.**

During design, the process outlined above identifies areas where further avoidance is necessary and ensures final design details are in compliance with environmental documents. This process is completed through a series of coordination efforts, including:

- ***Informal "Over the Shoulder" Interaction*** – Occurs on a daily or as-needed basis, and coordinates the intricate details between design and environmental staff to minimize or avoids impacts.
- ***Technical Design Meetings*** – Occurs on a weekly basis and is attended by design, environmental, utility, and construction staff to discuss major design details, progress since the last meeting, challenges associated with permitting, or areas where further avoidance and minimization is necessary. Schedules and status of permit acquisition are discussed ensuring the project schedule is reasonable and maintained.
- ***Formal Reviews*** – Occurs prior to milestone submissions and before any permit applications are submitted for review and approval. These reviews continue even after plans are approved, to include right-of-way acquisition and utility relocation stages. This is critical to maintain compliance with environmental permits as property negotiations proceed or if differing field conditions are identified which may require design details to be modified or added.

Throughout plan development, our Team focuses on incorporating project NEPA commitments and minimizing or avoiding environmental impacts. Table 5 identifies the Project commitments, constraints, and risks as well as our Team's approach to avoid and mitigate each risk:

Table 5 - Environmental Commitments/Constraints

ENVIRONMENTAL RESOURCES	METHOD TO LIMIT RISK MITIGATE DELAY
Threatened and Endangered Species	▪ Coordinate with the Virginia Department of Game and Inland Fisheries for newly added species, which may require a Time of Year (TOY) restriction for tree clearing. ▪ Recoordinate VDOT's March 29, 2016 consultation with US Fish & Wildlife Service (UFWS) for the Northern Long-Eared Bat (NLEB) TOY restrictions. ▪ Small Whorled Pogonia (SWP) Survey was completed and remains valid for 2 years with no individuals identified. ***Our unique concept avoids clearing of the 1.31 acres identified as potential SWP habitat.*** ▪ Conduct visual bat surveys on all structures in accordance with the Special Provision for Limitation of Operations Protection of Bats in compliance with VDOT Bat Inventory Guidelines for Bridges. If bats are observed roosting, our Team will notify VDOT, properly identify observed species, and coordinate with the USFWS and DGIF. ***By avoiding phased demolition of the bridge, it has been removed from the Critical Path for completion of bridge construction.*** ▪ We have already reviewed database records to confirm there are no Bald Eagle nests within a 1-mile radius of the Project.
Cultural Resources	▪ Review plans during coordination meetings ensuring utility relocations and grading impacts are contained within the limits previously cleared by DHR no affect determination.
VOF Easement 2318	▪ ***Our unique concept avoids all encroachments on the VOF easement.***
Water Quality Permitting	▪ Utilize information provided with the RFP, historic aerial photos, and field visits to confirm limits of wetlands and streams. Limits are marked for survey to develop a wetland file which is utilized to identify areas for avoidance and final impact quantities. ▪ This process has begun, and our identification of existing wetland and stream limits was considered when developing our unique concept. ***By eliminating relocated Mallard Road, we have avoided approximately 11,800 square feet of forested wetland impacts.*** ▪ Obtain Corps of Engineers (COE) Jurisdictional Determination and conduct Early Agency Coordination during the JD site review to address regulatory agency concerns. ▪ Develop permit documents (including CZMA Consistency Approval) following development of 60% plans, including drainage design and utility relocation details. This approach minimizes the risk that permit modifications will be necessary for changes in design details. ▪ Obtain COE Nationwide Permit #23/DEQ Section 401 Certification. ▪ Obtain VPDES General Construction Permit in accordance with latest version of IIM-LD-242. ▪ Reflag wetland and stream limits prior to construction, ensuring non-permitted areas are identified for avoidance by construction staff.
Hazardous Materials	▪ Review VDOT reports and State and Federal databases to identify areas of potential hazardous material concerns. Revise design to avoid impacts where possible, and conduct Phase I ESA investigations following 60% roadway plans for property to be acquired. ▪ Incorporate Special Provisions for encountering petroleum contaminated soil. Our unique concept allows for the placement of fill over the REC area at the former Texaco property, reducing the need for excavation of contaminated soils and associated cleanup costs. ▪ Contract Asbestos (ACM) and Lead Based Paint (LBP) testing of the existing bridge by an independent asbestos inspector licensed in VA early in the schedule to allow for DOLI permit acquisition. If identified, asbestos abatement for structures containing regulated RACM, non-RACM that are expected to become friable, and lead based paint will be completed in accordance with VDOT requirements. ▪ Testing, handling, and disposal of Hazardous Materials will comply with VDOT special provisions. ▪ Our unique concept has minimized the amount of closed system drainage required on potentially contaminated properties, and the roadway profiles have been developed to avoid installation of deep pipes in areas of potentially contaminated materials.

As each of these processes is initiated, the results of the coordination and requirements identified by the permitting agencies will be reflected on our Environmental Constraints Map (ECM). The ECM is utilized to identify environmental constraints and sensitive areas such as a Recognized Environmental Conditions (REC), known HAZMAT sites, jurisdictional wetlands and streams, historical resources, VOF easements, and

other preservation/conservation areas. These constraints are overlaid with Project and environmental study limits on larger scale exhibits that are utilized by the design team ensuring the proposed design minimizes or avoids impacts to sensitive areas.

A portion of the ECM already developed is shown in Figure 4.4.1.1, and shows areas of reduced impacts based on a comparison of the RFP concept and our unique concept. Our concept avoids all impacts to the VOF easement (shown in blue), including the 0.18 acres of temporary easement which was previously authorized for the RFP design.

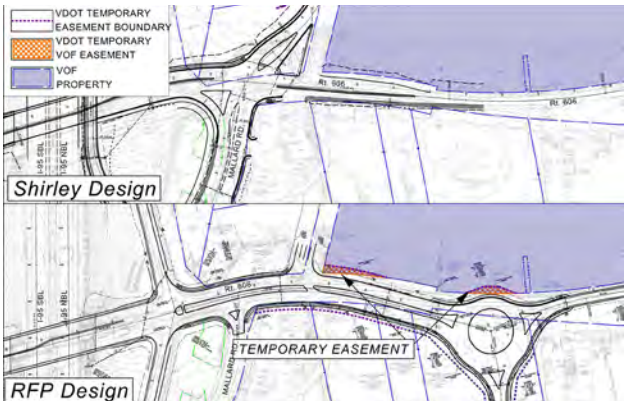

Figure 4.4.1.1 - Initial ECM

In addition to documenting critical and sensitive Project areas, the ECM enables us to highlight the design modifications which have been incorporated to further efforts of minimization and avoidance for the permitting agencies. An example is shown in Figure 4.4.1.2, where our Team eliminated Relocated Mallard Road and the need for two stormwater management basins by purchasing nutrient credits. ***This modification results in the reduction of approximately 11,800 square feet of forested wetland impacts, typically mitigated at a 2:1 ratio.***

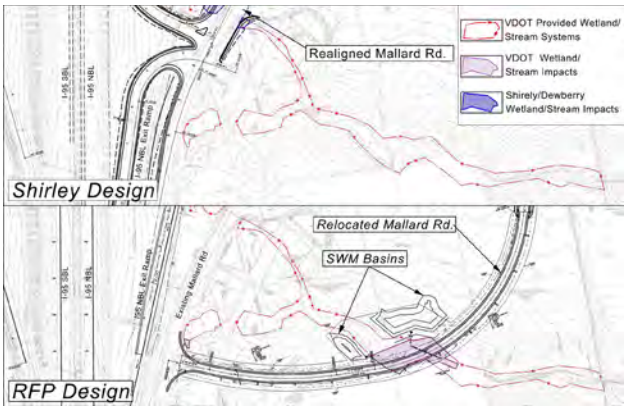

Figure 4.4.1.2 - ECM Showing Design Modifications

Environmental Benefits of Our Unique Concept

Our integrated environmental approach has already yielded substantial benefits. Through coordination with our roadway, utility, right-of-way, and construction teams, we confirmed with our environmental staff that our unique concept results in the following environmental enhancements as compared with the RFP concept:

- ***Minimized Wetland Impacts -*** reduces forested wetland impacts by approximately 11,800 square feet;
- ***Reduced Right-of-Way Impacts -*** avoids acquisition of right-of-way from five properties and reduces the total number of impacted properties from 12 to 9;
- ***Avoided VOF Easement -*** eliminates all impacts to VOF easement, including 0.18 acres authorized for the RFP concept;
- ***Reduced Clearing Forested Habitat -*** avoids impacts to 1.31 acres of potential habitat for the SWP and more than 2.7 acres of impact to forested habitat, minimizing potential impacts to state and federally threatened and endangered species; and
- ***Avoided & Minimized HAZMAT/RECs -*** avoids or minimizes impacts to and excavation of RECs on the Shell property and former Texaco property

Involvement of our Team's environmental staff does not end when permits are obtained, but rather continues until construction is completed and permits are closed. This construction involvement includes:

- Focus on construction monitoring and coordination of permit and environmental commitments. Prior to starting construction, environmental staff returns to the field to remark the limits of streams and wetlands at the permitted impact limits. Critical areas are delineated with safety fence to prevent accidental access and erosion and sediment (E&S) control measures are installed in accordance with the plans.
- To ensure permit compliance, we conduct preconstruction Constraints and Commitments Training, ensuring the construction team understands the constraints, their location, and how they are identified.

- Daily E&S Compliance checks performed by Project Inspectors to identify good trends and areas where additional attention is necessary. These checks are required as a part of the ROD and permit commitments.
- Monthly meetings with the Inspector and Construction Manager to discuss environmentally sensitive areas included in the next month's work. These meetings give the ability for the group to revolve any construction issues identified, and to highlight those constraints for construction staff.

4.4.2 Utilities

A critical element of complex design-build projects is the effective and efficient integration of the utility process into each project discipline. Knowing the impact utilities can have on the Project schedule and cost, we have expended considerable effort to coordinate with all impacted utility owners. We carefully studied the RFP Conceptual Plans, reviewed utilities in the field, discussed the Project extensively with each impacted utility company, researched available records, and developed our unique concept and schedule. This information has directly influenced our Team's concept, proposed phasing and sequence of work, limiting the impact to utility owners, reducing the risk of schedule delays and ensuring the Project is completed as efficiently as possible. Our Team's unique concept has eliminated impacts to the following utilities along Route 606:

- Overhead power;
- Overhead communication;
- Underground communication;
- Waterline; and
- Gravity sanitary sewer.

Approach To Utility Coordination

Our Team will be following the VDOT Utility Relocation Policies and Procedures Manual with regard to the utility scope of work. We already began activities ensuring the success of the utility relocation process, and Table 6 demonstrates a general outline of the steps and activities we will perform once the Project is underway:

Table 6 - Approach to Utility Coordination

1	■ Obtain utility designations ■ Review test pit information ■ Identify locations of existing easements
2	■ Provide feedback to design, permitting and right-of-way managers on potential conflicts ■ Develop plans for avoidance of utilities or minimization of utility relocation
3	■ Review plans for avoidance or relocations with utility companies ■ Coordinate with ROW managers on easements that might be needed to accommodate the relocations
4	■ Hold UFI meetings with private utility owners where conflicts exist ■ Establish utility relocation plan, budget and schedule ■ Incorporate relocations into the Project schedule
5	■ Verify each private utility's prior rights ■ Prepare UT-9 forms ■ Finalize pro-rata share budgets and relocation schedules
6	■ Meet with public utilities to finalize avoidance and/or relocation plans ■ Incorporate plans into design documents and submit for approval ■ Obtain necessary right-of-way (easements) for the utility relocations
7	■ Incorporate approved utility relocation plans into the construction schedule ■ Identify utility relocation activities which fall on the critical path ■ Evaluate resources needed to accomplish critical relocations
8	■ Proceed with utility relocations ■ Take immediate action on unforeseen utility conflicts ■ Maintain team approach to achieve quick resolution on unforeseen conditions and other field issues

Team Utility Coordination Experience

The key to our success is having experienced in-house resources with intimate knowledge of governing bodies' policies and procedures, as well as positive relationships with each utility owner. Our Utility Team is fully engaged in the design process coordinating with the right-of-way, permitting, construction, and scheduling of all other project disciplines. Our first and highest priority throughout the design and construction phases is to completely avoid utility impacts. If conflicts cannot be avoided by design, we work diligently with each utility owner to minimize relocations through a combination of design and/or protection measures. Only as a last resort will we relocate utilities to eliminate conflicts with new construction. Our Utility Team remains fully engaged during construction and coordinates relocations between the utility companies and the construction team to ensure their timely and successful completion.

Specific Utility Impacts

Table 7 below identifies the existing utilities and our strategy for addressing them.

Table 7 - Known Utilities And Their Potential Conflicts

Utility/Owner Description	Approximate Location	Known/Potential Conflict	Relocation Plan/Avoidance Strategy
OVERHEAD POWER/COMMUNICATION LINES			
Rappahannock Electric	Route 606 Station 137+50 to 145+00	Route 606 Widening	***Conflict Eliminated*** by our Team's concept
Verizon	Route 606 Station 137+50	Route 606 Widening	***Conflict Eliminated*** by our Team's concept
UNDERGROUND POWER/COMMUNICATION LINES			
Verizon	Route 606 Station 137+50 to 145+50	Route 606 widening	***Conflict Eliminated*** by our Team's concept
Verizon	Mallard Road Station 107+75 to 109+00	Mallard Road Widening and proposed drainage	Adjust in place as needed
Summit IG	Route 606 Station 134+00 to 141+00	Route 606 Widening	Relocate boxes and utilize existing spare duct
Comcast	Mallard Rd. Station 107+00 to 111+00	Mallard Rd. widening and proposed drainage	Relocate outside of proposed widening
Rappahannock Electric	Mallard Road Station 113+00 to 115+00	Realigned Raceway entrance	Relocate out of conflict with proposed entrance
WATER			
Spotsylvania County Utilities Water Hydrant	Route 606 Station 125+75	Route 606 Widening	Relocate out of conflict with proposed widening
Spotsylvania County Utilities Water Hydrant	Mallard Road Station 108+00 to 109+00	Proposed storm	Offset under storm
Spotsylvania County Utilities Water Service	Mallard Road Station 110+00	Mallard Road Widening	Reconnect service to property owner
Spotsylvania County Utilities Water Service	Mallard Road Station 111+50 to 114+50	Realigned Raceway entrance	Relocate out of conflict
Spotsylvania County Utilities Water Service	Route 606 Station 137+50 to 143+00	Route 606 Widening	***Conflict Eliminated*** by our Team's concept
SANITARY SEWER			
Spotsylvania County Utilities Sanitary Force Main	Mallard Road Station 106+50	Proposed Drainage	Relocate out of conflict
Spotsylvania County Utilities Sanitary Force Main	Mallard Road Station 114+00- to 114+50	Realigned Raceway entrance	Relocate out of conflict
Spotsylvania County Utilities Gravity Sewer	Route 606 Station 137+50	Route 606 Widening and Limited Access	***Conflict Eliminated*** by our Team's concept

Mitigation Strategies

Our Team's unique concept has eliminated several utility impacts that were in conflict with the RFP plan. By minimizing the widening of Route 606 at the east end of the Project and minimizing the footprint of L/A, we have eliminated conflicts with water, gravity sewer, underground communications, and all overhead power facilities. ***Eliminating these impacts reduces cost and risk of schedule delays, and allows our utility design to remain as efficient as possible.***

Table 8 - Innovations and Benefits

Project Innovations	Utility Benefit
Reduce widening Route 606 east of I-95	▪ Reduces impact to water, sewer, communication, and power
Phasing the Project with no utilities on the Critical Path	▪ Reduces risk of delay
Eliminate the extension of Limited Access	▪ Allows utilities to remain in place along Route 606
No impact to the existing RW-3 wall	▪ Avoids overhead and underground Verizon relocation

During our Team's early coordination meetings with each utility owner, we discovered new utilities previsously installed as part of the Dominion Raceway project. We then reviewed each utility in the field with the utility owners to determine how they will be impacted by both the RFP and our unique concept. These include Spotsylvania County water, Rappahannock Power underground bulk feeder, Comcast fiber, Summit IG fiber, and Verizon fiber. As shown in Table 8 our concept has avoided impacts to many of these utilities.

Schedule and Mitigation of Delays

During the RFP phase, our Team began coordinating with each discipline to develop phasing for each utility relocation, as detailed in Section 4.7. This advanced schedule coordination has been developed through multiple discussions with each utility owner, and historical data developed from our past experience with each owner on multiple design-build projects. ***Since our Team's concept eliminated several utility conflicts, we were able to schedule the Project without any utilities on the Critical Path.*** This allows our Team to phase the Project efficiently, reducing the risk of delays.

Stage 1 - Our Team will construct the bridge, along with the widening of Mallard Road and the majority of the realigned ramps. We will also construct the 8" waterline along Mallard Road, Summit IG fiber crossing Route 630, and adjust the Verizon and Comcast fiber along Mallard Road.

Stage 2 - Since the majority of the utility relocations will be completed in Stage 1, the relocations in Stage 2 will be minimal. During this Stage we will complete adjustments to the gravity sewer and the 8" waterline along Route 630.

Our Team constantly updates our schedule for each utility relocation to highlight relocations that are not remaining on schedule. In order to avoid any delays due to utility relocations, our Team's approach includes:

- ***Performing In-Place Relocations -*** Along Mallard Road where Verizon's facilities conflict with our proposed widening, our Team will adjust these underground fibers. By avoiding a complete relocation of this line, we will not need to place new duct and cable, or perform any cable splicing. This reduction in scope minimizes the impact to Verizon and the Project, and allows our Team to control the schedule.
- ***Utilizing Spare Conduit in Communication Duct Bank -*** During our preconstruction coordination meeting with Summit IG, our Team determined that there is a spare duct that can be utilized to replace the fiber that feeds the VDOT facility on the east end of the Project. Since Summit IG does not allow addition splices in their fiber facilities, our Team will add a hand hole at the end of our construction limits and utilize the spare duct. This allows us to relocate only the portion of the duct bank that is in conflict with the Project and allows Summit IG's facility to be installed to their standards. This reduces cost and the risk of delays to the Project schedule.

4.4.3 Geotechnical

We have investigated the soil conditions anticipated within the Project limits and have reviewed the available geotechnical data reports, historical aerials, topographic maps, soil survey maps, and USGS geologic maps. The Project site is located within the western edge of the Coastal Plain Physiographic Province of Virginia. The dynamic periods of erosion and repeated marine regressions and transgressions caused deposits to be characterized by a variety of sediment types that often form interlayering units. These units at the Project area are generally characterized by sand and gravel interbedded with occasional clay and silt deposits of Pliocene Sand and Gravel, Yorktown, and Calvert Formations.

As part of the Project's geotechnical investigation, subsurface exploration will be completed at the spacing and locations as specified in the most recent VDOT Materials Manual of Instruction (MOI) and Investigation Requirements for Trenchless Pipe Applications memorandum, taking into consideration all previous subsurface explorations performed within the Project area. We will mitigate geotechnical field investigation risks before starting the field investigation by conducting site visits after borehole locations have been staked, verifying the need for permits, and evaluating offset borehole locations where necessary.

The sequence of the subsurface exploration will be coordinated so that test borings required for design of the bridge abutments and slopes will be given a priority, followed by the roadway borings. By doing so, the critical information is shared with the entire team in a timely manner, allowing design to proceed and to meet schedule deadlines. We will perform in-situ testing such as Dilatometer (DMT) soundings and vane shear tests at abutment and pier locations, and collect undisturbed samples at all bridge locations and critical slopes. We will also have an extensive soil laboratory testing program to include consolidation, triaxial, and direct shear testing to determine the compressibility and shear strength (drained and undrained) characteristics of the underlying soils. Test borings along with the in-situ tests and laboratory tests provides better confidence on the soils physical properties and their engineering behavior.

Geotechnical Risks and Mitigation

Geotechnical conditions are a critical risk because the existing soils and their physical and chemical properties can have an impact on the overall design and construction schedule, the total cost, and the traveling public or nearby businesses. Based on laboratory test results and boring logs provided in the GDR, we anticipate that soils at design subgrade elevation generally consist of silty sands of the Pleistocene Formation, underlain by lean clays and fat clays/elastic silts of the Calvert Formation. The SPT blow counts within the Calvert Formation varied between 0-9 blows per foot, suggesting only very soft to firm consistency clays/silts.

The following narrative discusses the Projects geotechnical risks and our approach to mitigate them.

Settlement and Negative Skin Friction

Risk - The compressible soils encountered below existing embankments are considered to have completed their consolidation settlement process with stabilization of pore pressure over time. However, the fill placed for new abutments will induce additional stresses and further consolidation settlement. This will result in design issues such as negative skin friction (downdrag) on the existing and proposed abutment piles.

Solution - Our initial settlement analysis shows that about 6" of total settlement (elastic, primary, and secondary) is anticipated due to the addition of new fill at the abutment locations. We have evaluated various mitigation options such as:

1. Install abutment piles after the consolidation of the compressible soil layers in completed;
2. Predrilling through the negative skin friction zone and then drive the pile;

3. Preconsolidate the compressible soil layers by surcharging;
4. Use of wick drains to accelerate the settlement; and
5. Use of lightweight fill or foam concrete to reduce the load and negative skin friction.

Due to the realignment of Route 606, we have reduced the risk of affecting the existing substructure. The existing bridge foundations are about 13.5' away from the proposed abutment; therefore, the settlement and negative skin friction around the existing piles has been reduced. As stated in AASHTO Section 3.11.8, transient loads may act to reduce the magnitude of negative skin friction (downdrag loads). These transient loads acting downward will temporarily displace the pile relative to the soil and reverse the negative side resistance due to downdrag. Therefore, the reduced negative skin friction due to transient loading will be evaluated. In addition, we will also re-evaluate the existing pile capacity and compare it with the increased loads due to negative skin friction, if any. These two methods ensure that the additional loads on the existing piles are not exceeding the pile capacity.

It will be critically important to monitor the settlement during the construction activities due to the close proximity of the new work to the existing structure, and to reduce the impact on the construction schedule due to the waiting period for surcharging/preconsolidation. Therefore, we will install vibrating wire piezometers and settlement plates to monitor the settlement and ensures design parameters are met.

Acidic Soils

Risk - Corrosive soils are expected to be encountered in the Calvert Formation, which is generally observed approximately 8' below the existing ground surface. The corrosive nature of these soils is due to the oxidation of sulfide minerals, primarily pyrite and marcasite (FeS2), which react with atmospheric oxygen and moisture to form sulfuric acid, and can aggressively attack both concrete and ferrous metals. The sulfuric acid also is responsible for the development of free aluminum ions in the soil, which is toxic to plants and can severely impact efforts to revegetate cut slopes and embankments. Figure 4.4.3.1 shows slopes affected by acidic soils.

Figure 4.4.3.1 - Slopes affected by acidic soils

Solution - Results of corrosion analyses presented in the GDR show pH values between 4.5 and 6.3. pH values less than 5.5 suggests a corrosive environment for both concrete and ferrous metals according to the AASHTO LRFD Manual and the VDOT Manual of the Structure and Bridge Division. Since the Calvert Formation is located below the groundwater table, we anticipate that corrosion won't be an issue for pile foundations. Further, we do not anticipate major cuts along the Project alignment that will expose the acidic soils. However, we will perform additional explorations in the vicinity of pile foundations, bridge abutments, concrete culverts, and critical slope areas to evaluate the severity of corrosion and further delineate the limits of the corrosive soils.

If the soils are confirmed to be corrosive at their respective locations, the Team will select the most effective corrosion protection for the type of structure. Potential mitigation options we have utilized in the past are:

1. Utilizing bigger H-pile section than is required for design;
2. Pre-drill and install a casing within the acidic soil and then drive the H-pile;
3. Using a dense concrete which is less permeable to sulfate ions;

4. Using sulfate-resistant cement; and
5. Using cement with 25% pozzolanic material

Utility excavations and any temporary cuts will not be left open for more than 30 days to minimize the development of acid sulfate soil conditions. Also, activities resulting in fluctuations (lowering) of the groundwater table will be monitored as they may lead to the exposure of potential acid sulfate soils to oxygen.

Working within the Vicinity of Existing Structures

Risk - It will be critical to maintain operation of the existing bridge while the new bridge is being built. Understanding the precautions that need to be taken while working in the vicinity of existing foundations and developing solutions during the design process will be a top priority of the Team.

The Federal Transit Administration (FTA) and the United States Bureau of Mines (USBM) have established general guidelines for relating vibration magnitudes to a variety of different construction equipment, as well as safe operating distances to limit potential damage caused by vibrations. Based on the information developed by FTA and USBM, we recommend vibration levels, measured in terms of peak particle velocity (PPV), be limited to maximum 2.0 inches per second (ips) to limit the potential for damage to existing structures.

Solution - Our Team's design concept locates the new bridge foundations more than 10' from the existing bridge, eliminating vibration impacts. Based on the data provided in the GDR we have determined that the vibration from pile driving will not adversely affect the existing structure due to our unique concept.

Figure 4.4.3.2 - Pile Driving In Close Proximity To Existing Bridge On Our I-64 Design-Build Project In Newport News.

However, during the final design we will develop a graph with estimated peak particle velocities as a function of distance from the source for various driving hammer types. This process helps us to quickly estimate the peak particle velocities at any distance from the source. Where the estimated peak particle velocity will exceed the threshold limit of 2.0 ips, we will evaluate the following options to limit the peak particle velocity:

1. Pile configuration will be adjusted to limit the PPV;
2. Pre-drill (about 20' depth) the pile location before driving the piles;
3. Vibratory pile driving; and
4. Vibration cut off elements such as sheet piles between new and existing piles.

A pre-condition survey of the existing bridge will be performed and documented prior to driving piles. Threshold level and action level vibration limits will be determined based on the conditions of the existing structures. We will also monitor vibration by installing temporary instrumentation such as geophones and seismographs in the vicinity of pile driving.

Finally, we will also evaluate the potential of localized liquefaction due to vibration caused by pile driving operations; however, we do not anticipate this to be a risk. During design we will evaluate the liquefaction potential of the surrounding soils and estimate any vibration induced settlement.

Slope Stability

Risk - The placement of new fill material behind the new abutments and for proposed ramp alignment induces additional stresses on the soils, requiring consideration for slope instability. The geotechnical data provided in the GDR provides useful information regarding the subsurface soils and their affect on our unique concept. The main focus of the engineering analysis will be to properly characterize the undrained and drained shear strength of these clays. The shear strength will be evaluated from the laboratory tests such as triaxial and direct shear tests, and from in-situ tests such as dilatometer, and shear vane tests.

Solution - Our initial analysis based on the information provided suggested that the slope stability is not a primary concern. However, we will re-evaluate the analysis with the new subsurface information gathered at the proposed alignment. If the results are not satisfactory, we will consider using soil improvement techniques to increase the factor of safety to acceptable levels. The options we will consider are:

5. Use lightweight fill or foam concrete in place of regular weight fill;
6. Increase the reinforcement strip length;
7. Drilled aggregate piers; or
8. Use stabilizing piles.

4.4.4 Quality Assurance/Quality Control (QA/QC)

Our Team will deliver a superior quality project that minimizes VDOT's effort by providing detailed, comprehensive, accurate and auditable QA/QC documentation that clearly demonstrates compliance with the Contract and standards. Over the past 15 years we have continuously refined our QA/QC approach resulting in a reduction of VDOT staffing and oversight. With each design-build project, our plan is refined and updated to include changes to VDOT's manuals, special provisions, standards and unique elements specific to each project. This document serves as the basis for our Route 606 Bridge Replacement over I-95 with 606 Improvements QA/QC project plan. Our QA/QC Plan addresses both design and construction and defines the organization, work processes, and systems necessary to provide assurance and evidence that the Project is another quality undertaking successfully delivered by our Team. Our QA/QC Plan is in accordance with VDOT's Minimum Requirements for Quality Assurance and Quality Control on Design-Build and Public-Private Transportation Act Projects, January 2012 (VDOT's QA/QC Manual) and establishes criteria for QC, QA, owners independent assurance, verification and oversight duties for all personnel.

Design QA/QC Approach

Our approach to design QA/QC includes implementing multiple processes with qualified QA/QC personnel throughout design of the Project. This ensures that appropriate quality standards are included in the plans and other design documents, suitable materials are selected, and work is constructed in a safe manner. Our design QA/QC process is well-structured, easily audited and is continually maintained to minimize VDOT's efforts.

Our Team implements design QA/QC by adhering to the approved QA/QC Plan, conducting design reviews, completing interdisciplinary coordination, performing constructability reviews, involving VDOT in the overall design review process, and ensuring that all field changes follow the same process as original design. A brief discussion of these activities is provided below.

Design QA/QC Plan

As the Design Manager, Jeremy Beck, PE implements and manages the overall design QA/QC program (a subset of our QA/QC Plan) which identifies design QA and QC requirements. The design QA/QC program establishes the following:

- Procedures for preparing and checking all drawings, specifications, and other design submittals including

procedures to correct errors and deficiencies prior to submission;

- Processes to ensure design submittals are stamped, signed, and dated by the responsible Professional Engineer licensed by the Commonwealth of Virginia;
- Actions to ensure that the level, frequency, and methods for review of design, including independent review are in compliance with VDOT's functional requirements for the Project;
- Procedures for coordinating work performed by different persons in the same or different area, fabrication shops, casting yards, and other pertinent fabrication facilities at remote locations, or in related tasks to ensure that conflicts, omission, or misalignments do not occur;
- Procedures for identifying elements of design requiring special construction QA/QC attention/emphasis;
- Identification by firm, discipline, name, qualification, duty, responsibility, and authority for all personnel and/or entities responsible for design QA/QC, including sub-consultants; and;
- Establishment of design QA/QC functions, including scheduled activities for design QA/QC, identifying the drawings, specifications, and other design submittals that will be submitted to VDOT.

Jeremy verifies conformance with the QA/QC Plan using informal observations or by conducting audits of the checking and review processes established within the QA/QC Plan. Documents identified as "Released for Construction" are accompanied by written notification from Jeremy certifying that the documents were reviewed in accordance with the QA/QC Plan.

Design Review

Design QC includes review of drawings, engineering computations, and other design related documents for technical accuracy, conformance to contract requirements, as well as form, content, and spelling. Design QA evaluates whether the designers assessed problems appropriately, applied correct analyses, and assigned qualified personnel to tasks when conducting design related activities.

Design QA functions are provided by design discipline leads checking completed work and are carried out to a level commensurate with the complexity of the design element. This effort is managed by the Design Manager who ensures formal and documented reviews occur at predetermined times for submitted design documents as identified within the QA/QC Plan.

The process of checking deliverable documents first involves the creation of the QC Document (a copy of the deliverable) by the Originator (designer, writer, etc.). The QC Document is then dated, reviewed, and "red-lined" as appropriate by the design discipline leads who then return the QC Document to the Originator. The Originator "highlights" the "red-line" comments on the QC Document once the correction has been made or discusses the comments with the discipline leader for final determination, making note of final resolution. The Originator keeps the QC Document for record purposes and as evidence of performing design quality reviews. The Design QA Supervisor ensures that design activities adhere to this process and records of reviews are saved.

He also performs design QA reviews throughout the duration of the Project as set forth in the QA/QC Plan. He ensures that required QC functions were performed properly, and in conjunction with the Design Manager, and directs the correction of nonconforming design practices. He also ensures design standards, methods, and requirements of the Project are met, professional engineering judgment was applied correctly, and appropriate degree of care was utilized.

Interdisciplinary Coordination

Coordination between disciplines is critical to the success of the Project, not just during design, but also during right-of-way acquisition, utility relocation, and construction phases. Interaction between all discipline leaders through all phases ensures that project elements are properly coordinated, and schedule impacts and

conflicts are avoided from the outset. During design, weekly meetings are held so details can be discussed and coordinated with the multiple design discipline leaders including roadway, structural, hydraulics, and traffic engineers. Additionally, environmental permitting, utility relocation, right-of-way acquisition, and construction staff are involved to ensure design progresses in a manner which considers long lead items (such as environmental permits), are compliant with environmental regulations, and matches the required phasing for project completion (such as advancing right-of-way or utility relocation plans on critical properties). Potential conflicts/challenges are recognized and discussed, and the project team is able to efficiently identify alternate solutions. Coordination between disciplines continues beyond the design phase, ensuring that unforeseen situations which may arise are addressed as efficiently and collectively throughout the duration of the Project.

Constructability Review

Throughout our Team's history of working on VDOT design-build projects, we have found that regular, informal, over-the-shoulder type reviews from construction personnel work best to produce quality designs. These types of reviews are conducted at weekly internal progress meetings where the Design Manager (and the discipline leads as appropriate) present roll plots and/or developed plans to the construction personnel who are building particular pieces of the Project. Immediate feedback regarding the design is provided and appropriate adjustments are discussed so that unnecessarily difficult, unsafe, or out of schedule construction is avoided. Conversely, explanations regarding design requirements are conveyed to construction personnel, ultimately resulting in a greater overall understanding of project requirements. This type of on-the-spot review regularly occurs within our design offices between discipline leads and construction personnel, as is typical of all of our VDOT design-build work.

In addition to informal constructability reviews, the Design Manager and Design-Build Project Manager (D-B PM) coordinate formal reviews of the design by construction personnel prior to each plan submission. Comments regarding the constructability of the design are provided to the Design Manager for incorporation and/or further discussion prior to completing each design phase.

Quality Assurance and Quality Control of Design and Field Changes

Design changes, including field adjustments, will adhere to the requirements of the QA/QC Plan, commensurate with those applied to the original design. The Design Manager ensures that QA and QC reviews of changes after plan approval occur throughout the duration of the Project. Following completion of the Team's QA/QC review, each change is submitted to VDOT for concurrence prior to implementation in the field.

QA/QC Staffing Plan

The personnel selected as our QA/QC Team provide VDOT with unparalleled experience and understanding of the quality processes and coordination needed to successfully deliver the Project. Our design and construction staff has worked together and for VDOT for many years and is responsible for assembling and overseeing our QA/QC Plan. A description of our QA/QC staff and duties is listed in Table 9 below:

Table 9 - QA/QC Staff and Duties

Design-Build Project Manager
As D-B PM, ***Joe Fragale, PE, DBIA***, provides supervision and administrative management of the entire project including overall design and construction and reports at the executive level. He establishes the QA/QC program and adjusts the process as needed to assure quality of design and construction.
Quality Assurance Manager (QAM)
Tom Druhot, PE is the QAM and is responsible for the development of and adherence to the QA/QC Plan, ensuring all work and materials as well as testing and sampling is performed in accordance with the Contract and approved construction plans and specifications. He has full authority to initiate work stoppage and is able to recommend to VDOT withholding payment for design and/or construction activities that are not acceptable - this authority is made in writing as part of the QA/QC Plan.

Quality Assurance Testing and Inspection Technicians
Quinn Consulting Services, Inc., provides a full-time Lead Quality Assurance Inspector supplemented by a full-time Office Engineer and additional inspectors during peak construction seasons to ensure quality assurance testing and inspections of work items are performed, QC inspections are observed, and correction of non-conformities are completed in accordance with the Contract documents. The Lead QA Inspector, ***David Steele***, reports directly to our QAM. ***DIW Group, Incorporated*** will perform QA laboratory testing for the Project. DIW is a AMRL and CCRL certified laboratory and is independent from QC laboratory testing on the Project.
Design Manager
Jeremy Beck, PE, directs and coordinates the design process including work by sub consultants and is accountable for the design QA/QC Plan. He is responsible for implementing, monitoring, and as necessary adjusting the Design QA/QC Plan ensuring acceptable quality of the design work.
Design Quality Assurance Supervisor
Steve Kuntz, PE, DBIA is responsible for quality assurance of design elements included in the Project. Following completion of quality control reviews he performs a complete QA review of all design documents prior to submission to VDOT.
Independent Design QC Reviewers
Independent Design QC Reviewers Independent Design QC Reviewers perform the design QC function on each design element. The Design QC reviews are completed by qualified independent reviewers who do not have a direct role in the design development or the QA review function.
Construction Manager
Tom O'Brien, is the Construction Manager and is accountable for day-to-day construction operations, the construction portion of the QA/QC Plan, and for ensuring construction is in accordance with the Project requirements. He is on the Project site for the duration of construction operations.
Construction Quality Control Manager (QCM)
Louis Jarrett, is responsible for construction quality control and oversees construction quality control testing and inspection operations. Louis assigns Inspectors and Testing Technicians for each work package and monitors reporting documentation to ensure work packages are completed in conformance with the Contract requirements.
Construction Quality Control Inspections and Testing
Together, ***Dewberry Consultants LLC & GeoConcepts Engineering, Inc.,*** are responsible for quality control testing and inspection of construction for conformance with the QA/QC Plan and project related documentation. They possess current VDOT materials certifications for the types of testing and/or inspections they are assigned to complete. GeoConcepts Engineering provides the independent AMRL and CCRL certified QC Laboratory to perform all QC laboratory tests. The QC team will consist of a full-time senior inspector supported by an inspector/technician to complete on-site materials testing. Additional inspectors will be added during the peak construction season as needed to cover the workload.

Design QA/QC Procedure for One Unique Project Element

The one unique project element which requires additional QA/QC scrutiny during design is the proposed bridge foundation elements. Specifically, the interaction between the existing bridge foundations and the proposed bridge substructure elements, will require close and regular coordination and communication between design, geotechnical, and construction team members. Recognizing the condition of the existing bridge, we have already made progress to ensure the proposed design and existing bridge elements are coordinated, and impacts on existing elements from the proposed design are minimized or eliminated.

Design QA/QC will continue following Award through review of detailed design plans which depict the horizontal location of the pier and abutment foundations, and will include review of developed 3-dimensional exhibits which ensures both vertical and horizontal positioning of substructure elements will not have an impact on the existing bridge. Once direct impacts are confirmed to have been avoided, and minimum distances are identified in 3-dimensions, these values will be shared with geotechnical and construction staff. Geotechnical staff, through completion of additional testing and analysis, will be able to confirm that temporary impacts during substructure construction will be avoided, or if not, what increased distance is necessary to avoid impacts. Construction monitoring ensures that separations identified in the design plans are adequate for temporary construction means and methods, including temporary excavation (if necessary).

These reviews will be completed at the earliest stages of design to ensure major rework is not required should additional separation be necessary. In the event additional separation (vertical and/or horizontal) is necessary, the design plans will be updated, and new pier and abutment foundation layouts developed. Design QA/QC will confirm that bridge loads are adequately accounted for, and that modified designs properly transfer the loads to the foundation elements without requiring redesign of piers, caps, and/or superstructure elements. Design QA reviews will be completed by independent, senior engineers to ensure QC checks of design calculations are accurate and complete, and ensure that the 3-dimensional designs have been developed correctly. Hard copy prints of 3D exhibits and details will be maintained and provided for QC and independent QA reviews.

Only after all QA and QC reviews have been completed by design, geotechnical, and construction staff, will a formal submission be made for review by VDOT. Our preliminary efforts to date related to the bridge have been based on eliminating impacts to the existing bridge foundation elements during construction of the new bridge. We believe that our unique concept allows us to develop a final design which avoids all impacts to the existing bridge during construction, and QA/QC processes will be established to ensure this critical element is carried through preliminary and final design efforts.

Description of Construction QA/QC Procedures

Our Team's Construction QA and QC Procedures, found within our QA/QC Plan, have been established to conform to VDOT's QA/QC Manual. Our Plan stipulates the specific requirements of the Project and implements appropriate Witness and Hold Points for inspection of work at critical stages. These critical inspection points allow for VDOT review and approval and identify inspection requirements by the key members from the Design Team prior to construction activities continuing. Having this level of Design Team involvement in construction activities allows the engineer to confirm that actual construction conditions conform to the parameters anticipated during design.

During construction, the QA and QC Teams follow the established and approved QA/QC Plan. The QA/QC plan is structured to ensure that QC and QA functions are performed independently and that procedures and work products are regularly audited. Key elements of the Construction QA/QC Procedures are summarized in the following paragraphs.

Construction Quality Assurance

The QAM, Tom Druhot, P.E. with Quinn Consulting Services, Inc., is independent of the Designer, Contractor and QC Team, and is responsible for the Quality Assurance of the roadway, bridge and other physical construction operations, including the independent QA testing technicians. The QAM reports directly to the D-B PM and has the authority and responsibility to stop work and withhold payment for any work not being performed in accordance with the Contract requirements or lacking the QA/QC documentation necessary to prove that the work meets the Contract requirements. The QAM oversees and directs the personnel responsible for performing QA inspections and testing of all materials used and work performed. He has personnel representing the QA Team that reports directly to him and are not part of the QC Team.

All QA inspection staff complete daily reports and QA Independent Assurance (QA IA) and verification sampling and testing (QA VST) reports of all QA inspections. The QAM compares QA IA and QA VST results to the QC, Owner Independent Assurance (OIA) and Owner Verification Sampling and Testing (OVST) results to ensure consistency and accuracy at all testing levels. The QAM determines and certifies to VDOT whether the materials and work are in compliance with the approved drawings, specifications, and applicable VDOT standards and reference documents as outlined in the Contract. The QAM ensures that all inspectors have adequate certifications for the testing performed and that copies are maintained in the QAM files on site. The QAM has autonomy and responsibility to coordinate QA inspections and report findings directly to VDOT.

Construction Quality Control

The Construction QCM, Louis Jarrett, reports directly to the Construction Manager and manages the day-to-day QC inspections and material testing as directed by the Construction Manager. The QCM and QC Team are responsible for inspection of construction activities and all QC sampling, testing and analysis of materials ensuring construction quality is verified at frequencies exceeding those required by the VDOT Construction Manual, the Materials Manual of Instructions and Tables A-3 and A-4 of VDOT's QA/QC Manual. The QCM ensures that QC materials sampling and testing is consistent with the QC plan.

All QC staff actively inspecting and/or testing segments of work complete an Inspector Daily Report (IDR). The IDR's are electronic dairies in accordance with VDOT's Construction Division Memorandum CD-2000-14 and include, as an attachment, copies of all QC materials tests completed for the day's activities. Signed hard copies of the IDR's are submitted to the QCM on a daily basis for review and approval. The QCM completes an electronic Daily General Report, which summarizes the work covered by the IDR's. Copies of all signed Daily General Reports, IDR's, and test reports are then forwarded to the Construction Manager, QA Manager and others on the design-build team for use and review while the original documents are placed in three-ring binders, by project and month and maintained as part of the permanent QC records. All binders are stored in fireproof storage cabinets at the Project site and are available for audit by the QAM and VDOT at any time. A weekly report is produced by the QCM that contains summaries of tests, materials placed, actions taken for failing materials, NCR's, safety, inspection, environmental and schedule challenges.

Construction QA/QC Procedure For One Unique Project Element

A key element will be the construction of pile supported bridge abutments within mechanically stabilized earth (MSE) fill bearing on foundation soils identified as "compressible" soils. Due to the inherent nature of this type of soil, several possible MSE abutment wall design techniques and/or ground improvement processes may be employed by the MSE wall designer/supplier requiring a range of on-site QA/QC inspection procedures.

A common approach to address compressible foundation soils is through ground improvement techniques as recommended by the Project's Geotechnical Engineer of Record (EOR). Several techniques exist in the industry and the choice of which one to employ would be dependent on factors such as; severity in the lack of soil cohesiveness, variations in soil strata over the proposed MSE wall "foot print", relative size (surface area) of ground improvement required, time constraints to meet/keep construction deadlines, impact of the foundation soil improvement process to adjacent construction activities, and notwithstanding, economics/cost as an important consideration in achieving a foundation material with a sufficient bearing capacity to support the design bearing pressures realized at the base of the MSE abutment wall. Examples of MSE wall design or ground improvement techniques and related QA/QC inspection procedures are show in Table 10:

Table 10 - MSE Wall Design/Ground Improvement Techniques

MSE WALL DESIGN TECHNIQUE OR GROUND IMPROVEMENT PROCESS	RELATED QA/QC INSPECTION PROCEDURES
For expected differential settlement of less than 1%, the use of "slip joints" at locations along the length of MSE wall deemed necessary by the MSE wall designer.	▪ Check for proper space between slip joint panels overlapping wall panels. ▪ Check panel verticality and joint spacing uniformity and width in accordance with MSE Wall Supplier's Construction Manual and VDOT Specifications.
Preloading existing foundation with temporary compacted fill. Possible use of wick drains.	▪ Monitor full-length placement of wick drains where applicable, ensuring drainage path exists for pore water runoff. ▪ Conduct compaction/density testing of temporary fill to ensure proper bearing pressure is applied to the ground improvement area. ▪ Monitor settlement plates and provide information to Geotechnical EOR for calculation of rates of consolidation to determine when sufficient consolidation of the foundation material has been achieved.

MSE WALL DESIGN TECHNIQUE OR GROUND IMPROVEMENT PROCESS	RELATED QA/QC INSPECTION PROCEDURES
Excavation of existing foundation material to a depth determined by the Geotechnical EOR and replacement with a suitable granular fill in layers allows proper pore water pressure release. The use of a geotextile fabric in between layers of compacted fill may be required.	▪ Conduct compaction/density testing of permanent fill to ensure proper bearing pressure is applied to the ground improvement area. ▪ Observe uniform placement of geotextile fabric layers at the maximum spacing recommended by the Geotechnical EOR.
Use of a two-stage MSE wall design where a permanent MSE wire wall with two-stage connectors at the face is constructed up to and above the base of abutment footing. The first-stage wall will be allowed to settle to a sufficient point as determined by the Geotechnical EOR. Once EOR has determined settlement has sufficiently taken place, the second-stage consisting of the two-stage connector, precast facing panels and granular backfill will then be installed to provide the finished product.	▪ For Stage 1 construction, monitor backfill placement for depth and compaction (as required per material used). ▪ Observe reinforcement strip placement and connections to wire facing panels in accordance with MSE Wall Supplier's Construction Manual and VDOT Specifications. ▪ Upon completion of stage-one wire wall, monitor settlement plates or survey markers and provide information to Geotechnical EOR for calculation of rates of consolidation to determine when sufficient consolidation of the foundation material has been achieved. ▪ For Stage 2 construction, QA/QC inspectors to ensure levelness of unreinforced leveling pad, closely monitor two-stage connection of precast facing panels with self-compacting granular backfill. ▪ QA/QC inspectors to place close attention to panel verticality achieved through manual adjustments to the two-stage connector. ▪ Monitor uniform panel spacing through the use of bearing pads and temporary wooden wedges.

Considering the use of pile supported abutments, the interaction of the pile to the surrounding compressible soils as related to vibrations caused by the installation process is of some concern.

Close monitoring of the existing structure for possible settlement by periodic surveys of key elevations along the length of the abutments and visual monitoring of the existing structure for stress cracking should be performed periodically through the pile driving process. If vibrations are expected to have an adverse effect on the existing structure, the Geotechnical EOR will provide options for mitigating the impacts, such as, partial predrilling pile locations and installing corrugated metal pipe (CMP) casings to a depth suitable to curtail surface vibrations to acceptable levels. QA/QC monitoring will include depth measurements, horizontal layout checks on casings and piles, and verticality checks on the auger bit immediately prior to the augering process and the pile itself, before and after the pile driving process. Blow counts and pile depths will be monitored and recorded throughout the pile driving process.

Pile down-drag as a result of surrounding soil settlement over compressible foundation soils is of concern in the design of the abutment piles and may require additional design constraints. A possible design scenario to alleviate this concern would be placement of (empty) CMP casings within the MSE backfill at pile locations up to or above bottom of foundation elevation. QA/QC monitoring will include horizontal layout and verticality checks on casings and piles, blow counts and pile depths will be monitored and recorded throughout the pile driving process. In addition, close attention will be required by the inspectors for placement of MSE wall reinforcing strips around piles and casings (if present). QA/QC checks will include proper clearances between piles/casings, and MSE wall reinforcing strips, verification of skew angles on strips horizontally rotated at the tie strip to clear piles/casings. Proper compaction of MSE backfill around piles/casings near back of precast panels as would be inspected in accordance with MSE Wall Designer/Supplier's installation instructions and VDOT Specifications.

4.5 - Construction of the Project

4.5 Construction of the Project

4.5.1 Sequence of Construction

Throughout development of our Technical Proposal, our Team focused on means and methods to finish critical stages of work quickly and efficiently. Key elements of our Team's collaborative process included optimizing the sequence of work to achieve the goals of:

- Mitigating risk of existing bridge failure;
- Early completion of critical project elements;
- Ensuring the safety of the public and workers;
- Maximizing mobility; and
- Proactive stakeholder coordination.

The result of our Team's efforts is our commitment to a unique interim milestone:

- ***Shirley's Unique Milestone -*** Close existing Route 606 Bridge Over I-95 by November 1, 2018.

In addition, our schedule demonstrates achievement of the "No Excuse Early Completion Incentive".

Our Team's Proposal Schedule, presented in Section 4.7, has been developed with input from all Project disciplines including design, permitting, utilities, right-of-way, QA/QC, and construction. Table 11 shows how we planned for and incorporated numerous enhancements to exceed the above objectives.

Table 11 - Project Enhancements and Benefits

Enhancements	Public Benefits
1. Optimize Route 606 alignment allowing full construction of bridge over I-95. (single Phase)	▪ Reduces construction duration ▪ Enhances public safety and mobility ▪ Avoids impacts to existing bridge
2. Establish an intersection with Route 606, Mallard Road and Dominion Raceway.	▪ Creates commercially viable route which enhances mobility and therefore developmental appeal.
3. Eliminated right-of-way acquisitions from 5 parcels.	▪ Reduces project costs ▪ Minimizes risk of schedule delays

To organize these enhancements into a cohesive approach that focuses the Team on early completion, meeting milestones, and avoiding the risk of delays, we have organized the Project WBS into the following phases:

- **Phase I - Preconstruction**
  - A. Design
  - B. Right-of-Way
  - C. Public Involvement
  - D. Utility Relocations
  - E. Environmental Permitting

- **Phase II - Construction**
  - A. Administration & PIM
  - B. Project general items
  - **C. Stage 1**
    - 606 Bridge Over I-95
      - Abutment A&B

    - Pier Construction
    - Approach slabs
  - Construct bridge tie-in northeast quadrant
  - Construct bridge tie-in northwest quadrant
  - Northbound ramp from new bridge to existing ramp
  - I-95 ramp to Mallard Road
  - Northbound ramp – mallard road to existing bridge
  - Mallard Road to I-95 ramp connections
  - Construct southbound Mallard Road
    - Reconstruct northbound Mallard Road and eastbound Route 606
  - Westbound Route 606 from Dominion Raceway to exit northbound ramp
  - Construct Signals I-95/Route 606/Mallard/Dominion Raceway
  - Open new bridge over I-95 and intersection

(Close Existing Bridge Over I-95 Shirley's Unique Milestone of Nov. 1, 2018)

D. Stage 2

- Demolish existing bridge
  - Span 4 and 3
  - Spans 2 and 1
- Excavate/grade/pave remainder northbound I-95 ramp
- Construct concrete islands
- Finalize bridge walls and flatwork

E. Stage 3

- Obscure pavement
- Surface/mill/overlay tie-ins
- Final stabilize grade
- Inspect, punchlist, demobilize and closeout

(Early Completion – No Excuse Incentive Date 6/20/2016 and Final Completion)

Our Team's overall sequence of construction is shown graphically on Exhibit 4.5.2.1 on page 39, in the Proposal Schedule included in Volume II, and narratively below:

Stage 1 (Bridge Construction) Figure 4.5.1.1 on following page

1. Mobilization to the Project site including flagging of sensitive areas, installation of construction signing, construction entrances, barrier service, survey and layout, E&S controls, establishing initial staging and storage areas, and installation of traffic control devices.
2. Shore the existing bridge abutments for construction of new abutment foundations.
3. Install abutment foundations and MSE Wall to abutment footing.
4. Construct abutment footing and beam seats.
5. Excavate and shore the median of I-95 for the Route 606 Over I-95 pier foundations.
6. Stabilize the area and install pier foundations, Pier footings, and columns.
7. Backfill the pier columns to provide safe access for construction of pier cap falsework and pier cap. Construct pier cap, beam seats, and remove falsework.
8. Mobilize structural erectors and install bridge beams in phases progressing from the Abutment A to Pier 1, then Pier 1 to Abutment B. During beam erection install lifeline posts, overhang bucks, and protective lagging shield.
9. Complete the installation of the bridge deck overhang while installing the SIP deck forms in preparation for reinforcing steel. Concurrent to this operation install bridge backwall, and upper levels of MSE Wall. Settlement period begins.

10. Place and tie deck reinforcing steel, install bulkheads, and dry-run screed.
11. Cast bridge deck span A, span B, abutment joints, continuity diaphragm and deck closure.
12. Place abutment aggregate backfill and form, pour, strip approach slabs.

Figure 4.5.1.1 - Stage 1 Bridge Construction

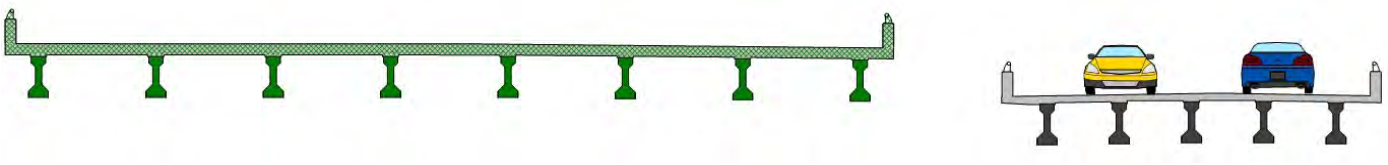

Stage 1 (Roadway Construction) Figure 4.5.1.2

1. Upon placement of barrier service as noted in the Stage 1 bridge construction, install construction entrances, E&S controls and strip topsoil to stockpile.
2. Perform earthworks cut to fill operations for tie-ins to new bridge, the new system of ramps, widening of Mallard Road, Route 606, and new Dominion Raceway entrance/exit.
3. Install open/closed drainage systems and grade newly established embankments. Construct traffic signals located at the new I-95 Ramp connection with Mallard Road and Mallard Road/Route 606/Dominion Raceway intersection.
4. Install proposed pavement section and wedge and level to match grade of existing ramps.
5. Provide notification to public for traffic switch. Move traffic to new Route 606 bridge Over I-95, onto new I-95 northbound to Mallard/Route 606 exit ramp, widened Mallard Road, Route 606 to southbound Mallard Road and relocated Dominion Raceway entrance/exit.

Figure 4.5.1.2 - Stage 1 Roadway Construction

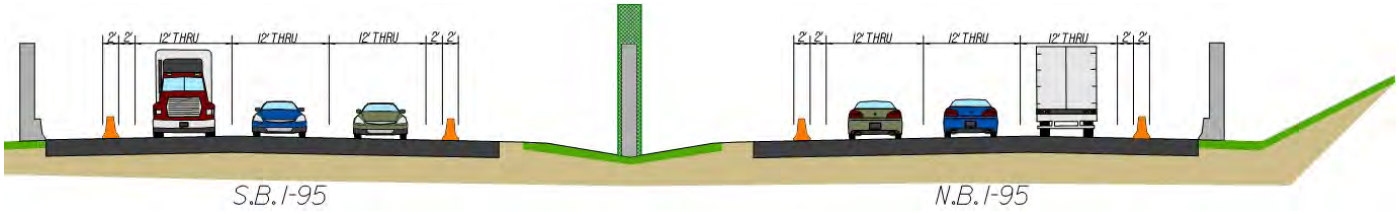

Stage 2 (Bridge Demolition) Figure 4.5.1.3

1. Provide advanced warning to traveling public of future lane restrictions for the demolition of the old Route 606 Bridge Over I-95. Setup appropriate traffic control systems.
2. Mobilize demolition crew to project and begin demolition of bridge. Begin demolition with complete removal of Span 4 and Abutment B then span 3 and pier.
3. Demolish bridge superstructure spans 2 and 1, followed by removal of substructure elements Pier 2, Pier 1, and Abutment A.

Figure 4.5.1.3 - Stage 2 Bridge Demolition

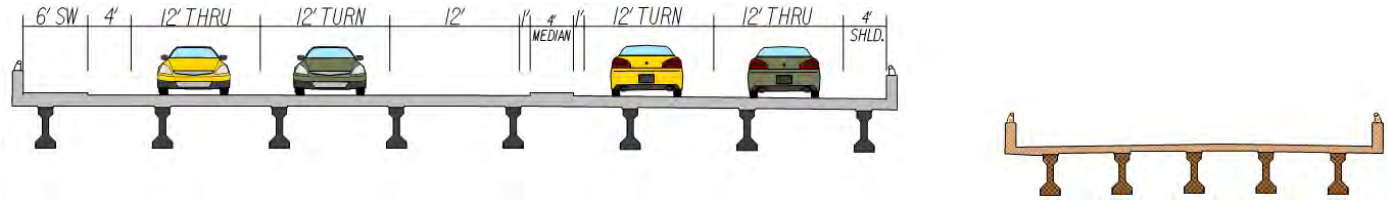

Stage 2 (Roadway) Figure 4.5.1.4

1. Install appropriate traffic control and update E&S control measures.
2. Strip topsoil to stockpile, excavate and grade ramp finalizing new ramp connection from Mallard Road to I-95 northbound.
3. Install permanent drainage, fine grade and install appropriate pavement section.
4. Saw cut/install curb islands, other flatwork and face bridge walls.

Figure 4.5.1.4 - Stage 2 Roadway Construction

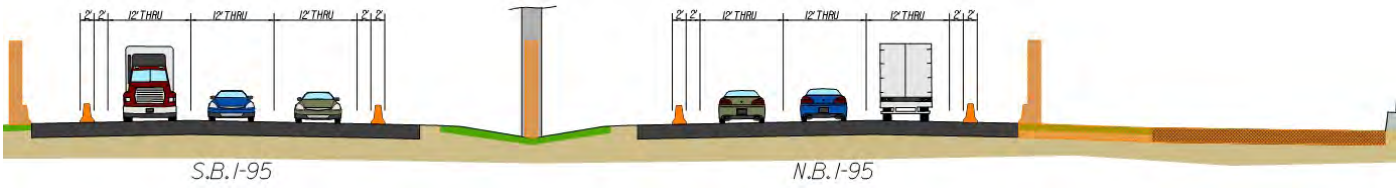

Stage 3

1. Obscure pavement of old ramp to northbound I-95, ramp from I-95 to Route 606, and Route 606 both east and west of the old bridge over I-95.
2. Perform mill and overlay of ramp tie-ins to I-95 and surface pave throughout the Project.
3. Finalize slopes, grade and seed to stabilize the Project green areas.
4. Perform inspections and punchlist.
5. Project administrative closeout activities.
6. ***Final Completion.***

Safety & Operations

As a result of our unique concept, the Project greatly benefits from complete off-line construction of the replacement bridge over I-95. ***Complete off-line construction allows our Team to remove all traffic from the existing structure faster than the phased construction required by the VDOT RFP concept.*** We are committed to prioritizing our efforts to remove traffic from the existing structure and have therefore provided the closure of the existing structure as a Unique Milestone.

Our proposed sequence of construction provides multiple safety and mobility enhancements. Through the interchange, safety is maximized by utilizing temporary barrier protection and maintaining full existing lane widths on I-95. To enhance driver mobility, we planned construction activities that minimize the need for disruptive lane closures. When lane closures are required for activities such as installation of new pavement markings, we strive to limit the work to the hours of least disruption within the allowable lane closure "windows" as detailed Section 4.5.2.

Safety - Each of us has the responsibility to ourselves, our families, our co-workers, our clients, and the public to ensure a safe work environment- regardless of cost.

SHIRLEY · 1974 · 2014 · 40 Years · SAFETY · INTEGRITY · PEOPLE · PRIDE · INNOVATION · CONTRACTING COMPANY

Shirley's Core Values

Construction and Traffic Safety - Our Team's TMP, TTC Plans, and Construction Sequencing have all been developed to maximize public safety while attaining the peak operational capacity of the roadway, and also allowing for the safe construction of roadway and bridge elements. Following traffic counts at the onset of design, all plans will be adjusted to allow the maximum flow of traffic through the corridor. As detailed in Section 4.5.2, enhanced safety strategies ***exceeding VDOT requirements*** will

also be utilized to maximize safety, such as higher quality pavement markings and additional PCMS signs. During construction, the VDOT Work Zone Safety Checklist will serve as the minimum standard to ensure conformance with the Project's safety requirements, and checks will be performed daily.

Geotechnical Constraints

Our Team prioritizes the required geotechnical investigations and provides methods for remediation of poor soils along the roadway in the early phases of design. Based on our site reviews and geotechnical investigations completed to date, we anticipate settlement of the bridge Abutment MSE walls as a result of poor soils and have incorporated a settlement wait period to address this concern. In addition, we are prepared to perform surcharging, 'undercut and replacement', lime or cement soil stabilization, use of geo-stabilization grids and fabrics, or alternate foundation types, and will identify these measures in the geotechnical recommendations. After evaluating the effect, if any, these issues have on specific construction activities and sequence, the Team makes the appropriate changes to the schedule and incorporates them into our overall Plan. These changes may include resequencing work, adding resources, adjusting activity durations, or possibly redesign so that completion milestones are not affected.

For off-site borrow, sources are tested in advance of delivery to the site to confirm they meet specification requirements prior to placement. During construction, delivered material will be inspected by the QA/QC team to confirm that it is consistent with the tested material and placed with the appropriate methods.

Environmental Impacts

Once plans are finalized and released for construction, the environmental team shifts focus to construction monitoring of the permit and environmental commitments in the field. Prior to the start of construction, the original wetland team returns to the field to remark the limits of streams and wetlands at the permitted impact limits. Critical areas are delineated with safety or silt fence to prevent accidental access and prescribed E&S control measures are installed in accordance with the plans.

Monitoring and inspection is conducted in compliance with all permits, commitments and regulatory requirements. E&S inspectors pay particular attention to the condition and effectiveness of installed devices. In addition to weekly routine inspections by construction personnel, environmental staff and designers responsible for the permitting and design make regular site visits ensuring areas of avoidance are preserved and the site is properly stabilized in accordance with the permit documents. Restoration of temporarily disturbed wetlands and streams are inspected to ensure proper repair and stabilization.

During construction phasing, our Team ensures E&S control documents are strictly adhered to and the approved Stormwater Pollution Protection Plan (SWPPP) is available for review and is followed. This starts with installation of all Phase I E&S devices such as silt fence, diversion dikes, sediment traps and basins prior to grubbing and grading operations. Our Team ensures stabilization of denuded areas is performed within the required time frames. Most importantly, we dedicate an E&S maintenance crew to the Project at all times to monitor the site and relieve over-burdened E&S devices, reinstall or reinforce existing devices and prepare for forecasted rain and storm events. The crew is led by a foreman carrying the VDOT ESCCC and DCR Registered Land Disturber credentials. VDOT Forms C-107a and C-107b as well as proper documentation are kept current at all times per DCR and VDOT regulations.

Right-of-Way Acquisition (ROW)

Similar to permitting, the right-of-way acquisition process must be well integrated into the design, utility and construction schedules, and started as early as possible. As we developed our schedule and sequence of work, we continually analyzed the affect these disciplines have on private properties and our ability to minimize and

avoid them. ***These efforts provided us with the ability to save 85% of the planned right-of-way and avoid impacts to three of the original planned acquisitions, further reducing project cost, impacts to the public, and risk of schedule delay.***

For the remainder of planned acquisitions, our Team has prioritized its acquisition to match the sequence of work. This is critical in our ability to meet the Milestones and is closely monitored during the process. If conditions change, we have the ability to immediately react by adjusting the priorities, resources, and sequence if necessary using our in-house right-of-way resources dedicated to managing the acquisition process.

Our Proposal Schedule included in Section 4.7 outlines the complete acquisition process and indicates our planned right-of-way sequence.

Staging and Storage Areas

To maximize safety and avoid delays to the schedule, staging and storage areas must be well-planned and integrated into the overall sequence of work. When planning these areas, the objectives are to establish locations that do not impact public traffic, do not create a public nuisance, do not have to be relocated during construction, and are close enough to the work area to avoid production inefficiencies. Also critical to maintaining project efficiencies is the location of the field office compound. Currently, we have several locations under consideration for the location of our field office and primary staging area and will finalize our decision on the location prior to commencement of construction as they involve negotiation with land owners.

Public Involvement/Stakeholder Coordination and Government Approvals

To avoid the risk of delays to the schedule due to stakeholder approvals, it is imperative that the Team understand all of the parties that have input, their procedures and timeframes for approval, and the affect they have on sequence of work. We identified stakeholders in our Organization Chart included in Section 4.2, and will refine this list as the Project moves forward. At this preliminary stage, we have included those stakeholders that could impact the completion milestones on the schedule included in Section 4.7.

Immediately after Award, the Team will meet with each stakeholder individually to discuss the Project, understand their issues and concerns, and explain the schedule and sequence of work. Input is incorporated in the schedule based on these discussions, and the schedule will in turn be communicated to them. The Team will establish a regular series of Progress Meetings which stakeholders may provide further feedback on progress and aid in facilitating coordination.

We will plan and hold “Pardon Our Dust” meetings with the public at critical stages of work to communicate project details, our sequence of construction, and overall schedule. We will use this forum to solicit feedback and establish lines of communication with those affected. Because traffic patterns change as the work progresses, it is imperative that we coordinate directly with police, fire and rescue, local schools, and public transportation by establishing points of contact, distributing flyers, and presenting project details directly to them. Traffic changes are communicated on site through the effective use of signs and PCMS boards. We will update VDOT’s website to distribute important updates. The Team will also communicate with the public by submitting updates and graphics describing traffic patterns to the local media in order to reach large audiences.

Mitigating Potential Delays

As described above, our Team has advanced a number of concepts, plans and procedures for ensuring the Project is completed ahead of schedule without delay. As we develop our schedules, we are constantly focused on issues and concerns that have the potential to create delays and then direct our efforts on mitigating them. At various stages, we rely on proven methods for creating, monitoring, and maintaining the schedule:

- ***Technical Proposal Stage -*** As the groundwork for the Team's schedule is developed in this stage, it is critical for all disciplines to have input. Our Team has met on a weekly basis since release of the RFP to discuss issues, create our concept, solicit feedback, and make schedule adjustments accordingly. The Proposal Schedule in Section 4.7 is the result of this close collaboration and has buy-in from all Team members.
- ***Design Stage -*** As we proceed through the design process, the integration of the various disciplines rises to a higher level. We will continue to hold team meetings at a minimum on a weekly basis to provide an over-the-shoulder forum for review, discussion and feedback. During this time period, our formal Project Schedule is developed and reviewed with VDOT and stakeholders. Should issues arise or conditions change during design that impact the sequence or completion milestones, the Team reviews schedule options for correction so that these milestones are maintained. Once finalized, it is communicated to each discipline, our construction forces, subcontractors and consultants, and other affected parties and is the basis for the Team's planning efforts moving forward. Throughout this stage, the approved schedule is monitored, updated and communicated to VDOT by the D-B PM to ensure that it remains compliant.
- ***Construction Stage -*** As the Project transitions to construction, the Construction Manager and D-B PM closely monitor and update the schedule on a regular basis. The CM ensures the schedule is communicated to the entire Team, including utility companies, QA/QC, government agencies, and others. In addition, shorter, more detailed schedules are created by the construction teams to better aid planning their work. These 2-week and 6-week "look-ahead" schedules allow teams to plan activities on a daily basis and communicate specific tasks and milestones in a direct, concise way. Our Team also utilizes a proprietary "Daily Shift Cost Report" (DSCR) system that tracks the costs for certain critical activities each day and compares them to the budgeted cost. This is an excellent indicator that scheduled production rates are not being achieved and provides the construction team with "real-time" data. Throughout the construction schedule, these schedules and data are monitored and compared to the approved baseline schedule so that delays can be anticipated. Then, the Team evaluates options for avoiding delay or recovering the schedule including re-sequencing the work, adding resources, or redesign of certain features.

4.5.2 TRANSPORTATION MANAGEMENT PLAN

Our Team is dedicated to delivering this Project with a construction program that minimizes public impacts and sets a high standard for public communications during construction. All aspects of our Transportation Management Plan (TMP) and Temporary Traffic Control Plan (TTC) are developed with a focus on maximizing safety for the traveling public and construction personnel while minimizing travel delays throughout all stages of construction. To accomplish these safety and mobility goals, we have committed to mitigation and communication strategies that ***exceed the requirements of the RFP***. Some of these strategies are listed below and are detailed on the following pages:

- Utilizing enhanced safety devices that exceed requirements;
- A sequence of construction that minimizes lane closures;
- Early completion of the Project to minimize public impacts;
- Use of construction access points on ramps to minimize trucks accessing work directly from I-95;
- Analyzing and mitigating existing safety concerns prior to major construction activities; and
- Enhanced public communication outreach commitments.

TMP Philosophy

We know that setting the stage for a successful and safe project for the traveling public, business community, construction, inspection, and VDOT project staff begins with the development of the comprehensive and accurate TMP that encompasses the complexities and challenges of this Project. Per Part 2 Section 2.10 of the RFP, our Team will prepare a Type B, Category IV TMP for I-95 in accordance with VDOT I&IM 241/TE-351. To meet our high safety and mobility standards, the TTC and TMP plan development will be led by our

Maintenance of Traffic (MOT) Engineer, Jerry Mrykalo, who is a Professional Traffic Operations Engineer (PTOE) and certified as a VDOT Work Zone Traffic Control instructor. Additionally, our design engineers have completed our in-house Work Zone Traffic Control Training Program and are VDOT certified in the development of TTC and TMP plans, ***exceeding the requirements of the RFP.***

Sequencing of Work

Construction staging and sub-staging for this project has been developed for the unique construction and temporary traffic control features. After carefully studying numerous phasing options, we determined construction stages that allow our Team to efficiently construct the Project while also minimizing mobility impacts to the traveling public. We have developed specific temporary traffic control strategies as highlighted on Exhibit 4.5.2.1 on page 39. This exhibit depicts the detailed phasing that we will use to safely maintain all lanes during construction based on the unique challenges presented.

Highlights along Route 606 include maintaining continuous driveway, gas station, and raceway access at all times, and the early opening of additional lanes on Route 606. Highlights for I-95 include maintaining all ramp movements at all times, and utilizing the ramp as detours for overhead bridge work in order to avoid stoppages along I-95. Also our Team's concept reduces the necessary work zone length along Route 606 compared to the RFP concept, simplifying operations on this important east-west route. Our sequence of construction also maintains all existing lanes as well as the flashing signalized intersections along Route 606 at both the I-95 northbound and southbound ramps.

Furthermore, we commit to closing the existing bridge to traffic by November 1, 2018, ***exceeding the requirements of the RFP*** with this Unique Milestone.

Traffic Control Details

As shown on Exhibit 4.5.2.1, our Team has developed a TTC strategy that maximizes safety, minimizes construction duration, and minimizes stakeholder impacts. Upon Project Award, we will complete full detailed design for the TMP and site-specific TTC plans. The TTC plans detail every specific element required during construction. These plans will be developed for each stage of work to identify barrier and channelization locations, temporary sign locations, PCMS devices, construction access points, temporary pavement markings, temporary drainage, areas of construction, and all other requirements per VDOT's I&IM-241.6, the Virginia Work Area Protection Manual, and the Manual on Uniform Traffic Control Devices (MUTCD).

Our Team also recognizes common shortfalls with TTC in work zones, and we are committed to avoiding these conditions with carefully designed site specific temporary traffic control plans. For example, we ensure that barrier ends and impact attenuators are flared as far away from traffic as possible, as driver collisions with impact attenuators can result in high-severity crashes. We also know that temporary traffic barrier placement must be reviewed ensuring all turning movements and sight distances are maintained and adequate drainage and snow removal capabilities are maintained. Technical highlights of our proposed plan are as follows:

I-95 & Ramps

- No long term lane closures or ramp closures planned and no temporary detours planned;
- Time of day restrictions will follow Part 2 Section 2.10.3 of the RFP. Temporary lane closures are anticipated for night time paving, placement of traffic barriers, and delivery of materials;
- Temporary I-95 30 minute maximum full diversions on I-95 during overnight hours are only expected for overhead bridge work and overhead sign work (traffic will be diverted to interchange ramps to maintain continuous flow of I-95 thru traffic during this 30 minute period);
- Minimum 12' wide lanes will be maintained with 2' minimum shoulders throughout (***exceeding the requirements of the RFP*** for only 1' shoulders); and

REVISED	STATE	STATE ROUTE	STATE PROJECT	SHEET NO
	VA.	606		

DESIGN FEATURES RELATING TO CONSTRUCTION OR TO REGULATION AND CONTROL OF TRAFFIC MAY BE SUBJECT TO CHANGE AS DEEMED NECESSARY BY THE DEPARTMENT

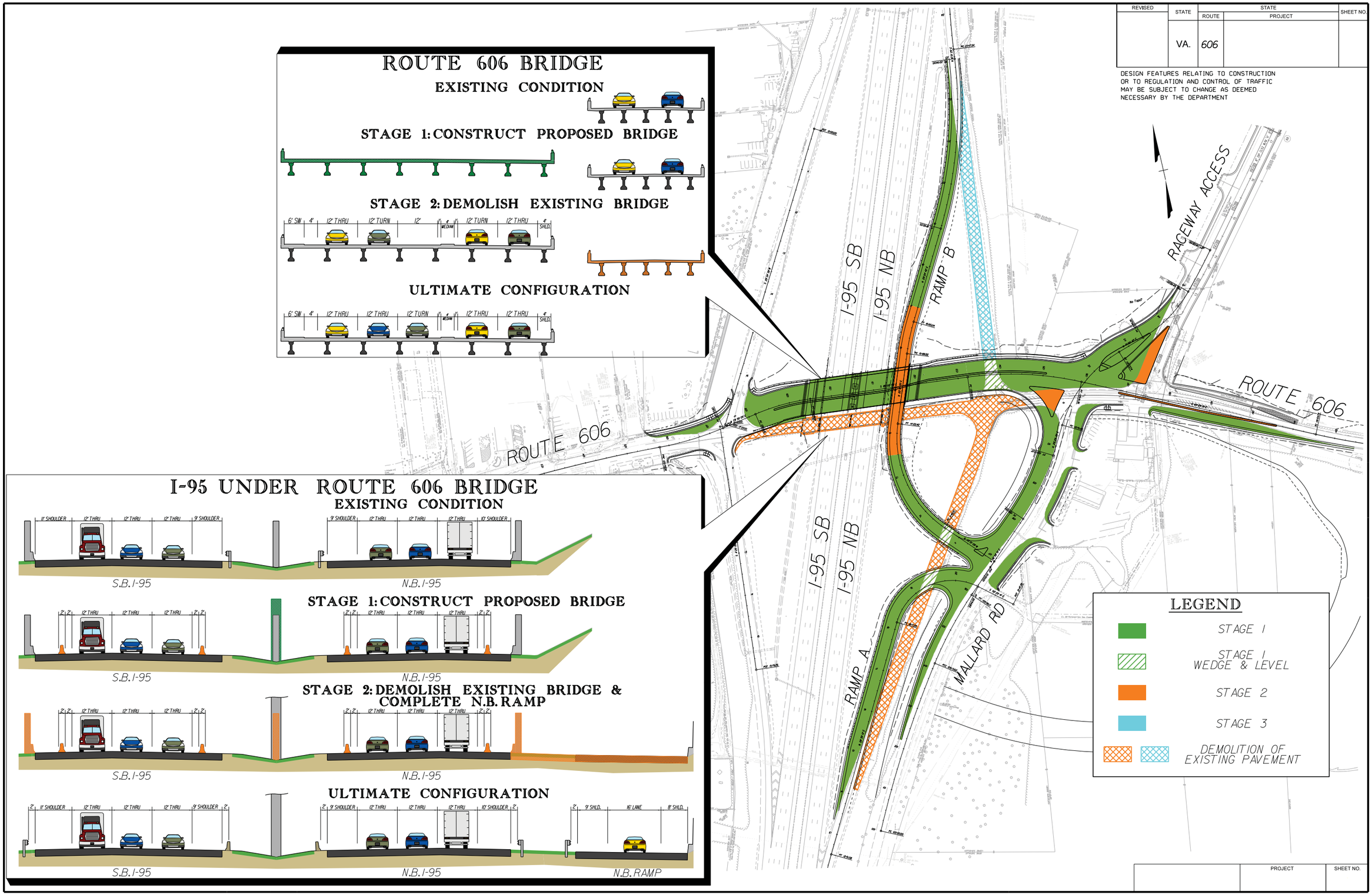

PROJECT	SHEET NO.

- No temporary traffic shifts will be utilized on I-95, ***exceeding the requirements of the RFP.***

Route 606 & Local Roadways

- No long term lane closures planned and no temporary detours planned;
- Time of day restrictions will follow Part 2, Section 2.10.3 of the RFP;
- No full stoppages planned;
- Maintenance of existing traffic signals through construction;
- Flagging operations only anticipated for necessary activities such as the installation of barrier;
- Minimum 11' wide lanes will be maintained on all other local roadways, and our Team will strive to provide 12' lane widths wherever possible, ***exceeding the RFP requirements;***
- A 1' minimum shoulder will be provided, with 2' provided wherever possible; and
- All temporary traffic shifts will be designed to meet the full posted speeds where feasible, exceeding the requirements of the Virginia Work Area Protection.

Speed Limits During Construction

Our Team has taken the proactive step of already completing an analysis utilizing VDOT's TE-350 to determine the appropriate posted speed limit during construction. Based on this analysis, we recommend maintaining the existing posted speed limits of 70 mph on I-95 and 35 mph on Route 606 for the following reasons:

- All temporary geometry and lane shifts will meet the standards for the full posted speed limit (Route 606), and no lane shifts will be utilized on I-95, ***exceeding the requirements of the RFP;***
- Full 12' lane widths will be maintained on I-95 throughout the work zone;
- In addition to minimizing motorist delay, research has proven that lowering speed limits where geometric conditions do not require the reduction actually lessen safety, since large deviations between driver's speeds commonly result in increased accidents; and
- The new bridge will be constructed in a single stage, and the existing bridge will be demolished in a single stage, allowing safe separation of public traffic from work activities.

This recommendation based on VDOT's TE-350 process will be fully discussed with VDOT's Traffic Engineering staff, and we understand the final determination will be made in coordination with the Regional Traffic Engineer post Award.

Unique Project Challenges and Solutions

Specific attention has been given to the unique challenges of the Project, with a focus on mitigation and communication strategies that maximize safety, minimize public impacts, and minimize schedule risk. By carefully studying these elements, our Team has devised the following unique solutions:

Maintenance of Interchange Ramp Movements

Through careful coordination with the bridge and roadway designs, we developed a sequence of construction that maintains all existing ramp connections throughout construction. To accomplish this, we have developed roadway profiles that allow the proposed northbound I-95 ramps to cross the existing ramps at-grade without the need to demolish or perform excessive overlay at the crossing points. For the southbound I-95 off ramp that is in close proximity to the new bridge, we have also optimized the profile to allow for continuous maintenance of this ramp. This condition shown graphically in Figure 4.5.2.1 avoids any temporary detours, as the adjacent interchanges on

Figure 4.5.2.1- Maintenance of Ramp Movements

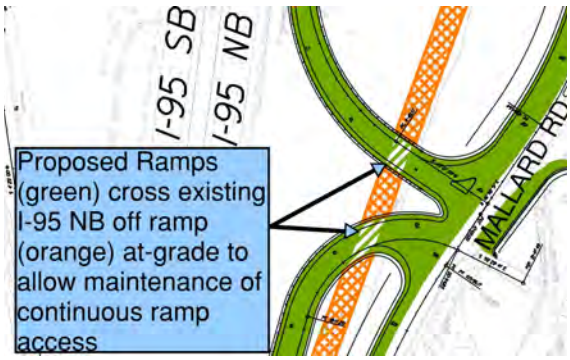

I-95 that could be utilized as detours are several miles away due to the rural nature of southern Spotsylvania County/northern Caroline County. In addition, the new signals on Mallard Road will be installed during Stage 1 construction, so that they can open concurrent with the opening of the new northbound off-ramp, allowing for smooth traffic flow off of Northbound I-95 and onto Route 606. These enhancements provide safety and schedule benefits while also meeting driver expectation during construction.

Exposure for Workers and Motorists

Worker safety and ease of constructability was an important factor in our Team's decision to utilize the Offset Diamond concept that reduces work along Route 606, while focusing on improvements to Mallard Road instead. This provides an important public benefit as the traffic volumes on Mallard Road are much lower than on Route 606, thereby subjecting less traffic to the active work zone. In addition, speeds on Mallard Road are lower than on Route 606, providing an important safety enhancement for construction personnel.

Maintenance of Raceway and Business Traffic

Our Team understands the importance of both minimizing the number of traffic switches and making the switches as easy to comprehend as possible for raceway and gas station traffic, as a large proportion of this traffic are visitors who do not have the same familiarity with the work zone as daily drivers do. Our Team has ***committed to exceeding the RFP requirements by shifting the bridge and the Route 606 permanent alignments further away from existing Route 606, thus minimizing disruptions to Route 606 traffic.*** Our Team has also developed a construction plan that allows early opening of the 4-lane Route 606 Bridge to further benefit traffic conditions. With this innovative phasing plan, all existing movements on Route 606 into and out of the raceway and gas station will be maintained throughout construction.

Staging of Bridge Construction

Our unique design with Route 606 shifted to the north ***completely eliminates a stage of construction*** by allowing the entirety of the new bridge to be constructed without impacting the existing bridge. This enhancement provides an important benefit to I-95 traffic by limiting the duration of work over I-95 and avoiding additional stoppages of I-95 that would be required for 2-Stage bridge construction. In addition with this reduction of stages necessary for bridge work, we are able to deliver an early enhancement for traffic flow along Route 606 by opening the new Route 606 Bridge by November 1, 2018.

Investigation and Mitigation of Existing Safety Issues

Our Team performed an investigation of existing crash statistics and safety concerns within the Project limits and have developed approaches to mitigate these risks. We recognize that this section of I-95 has a comparably high rate of crashes, a recent multi-vehicle incident with multiple injuries, and a run-off-road crash with several fatalities. In recognition of this, ***our Team will exceed the RFP requirements*** by employing site-specific impact management strategies to maximize safety of both the traveling public and construction personnel. For example, as detailed on the TTC typical section on Exhibit 4.5.1, we will maintain full 12' lanes on I-95, will not introduce lane shifts, and will utilize full concrete barrier protection for run-off-road vehicles. The results of our safety analysis, as well as our proposed mitigation strategies, are depicted in Figure 4.5.2.2 on the following page.

Figure 4.5.2.2 - Crash Data

In addition to the mitigation strategies depicted above, the following safety improvements will be utilized throughout construction stages, such as:

- Use of ***thermoplastic pavement markings*** instead of paint markings on existing asphalt, which significantly improves marking visibility and eliminates the need for temporary lane closures that would be required to refresh paint markings;
- Use of ***tighter than required channelizing device spacing*** for increased work zone delineation and construction personnel safety;
- Use of ***full continuous temporary raised pavement markers*** for increased lane alignment visibility, especially at night and during wet pavement conditions (only required at lane shifts per the Work Area Protection Manual);
- Use of ***three PCMS in each direction of I-95 (with additional PCMS 4-miles in advance of interchange)*** given the high speeds and high crash rates on this section of I-95, ***exceeding the RFP requirements;***
- Use of ***lane shifts a full 2X longer the required minimum shift length on Route 606*** to avoid "abrupt" shifts. Use of this "forgiving" geometry is expected to reduce potential side-swipe and run-off-road crashes;
- ***Monitoring of traffic and safety conditions during construction.*** Our Team commits to monitoring traffic and safety conditions in the work zone throughout construction, and reviewing conditions for safety upon implementation of new traffic control patterns. These reviews will be completed by traffic engineering to ensure that the controls have been implemented correctly, and to provide suggestions and recommendations for enhancements;
- Use of ***wider than required lane lines*** for increased delineation of lane shifts.

Minimizing I-95 Impacts

Given the 70 mph speed limit on I-95, we recognize the need to limit disruptions on I-95. To mitigate this risk, our Team commits to utilizing temporary access points from low speed ramps (such as Ramp B and Ramp C) to reduce the amount of construction traffic entering the work zone directly from I-95. ***This direct access provides a significant safety benefit while also providing a mobility benefit for public traffic.*** An example of these access points is illustrated in Figure 4.5.2.3. Our Team will also exceed the requirements of the RFP by maintaining 12-foot lanes and no lane shifts on I-95. In the areas where direct access to the median from I-95

Figure 4.5.2.3 - Temporary Access Points

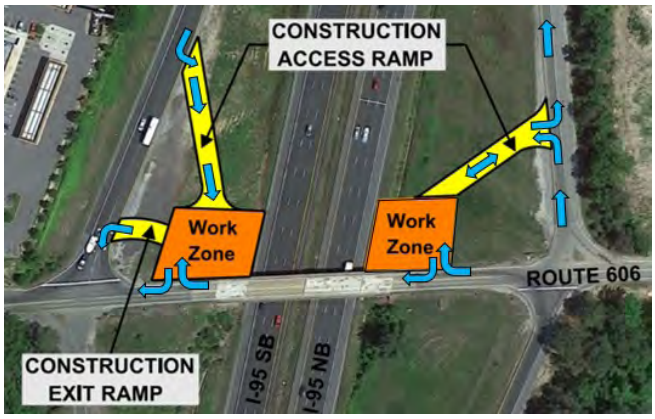

is necessary, we will provide acceleration/deceleration areas for trucks along the existing shoulders meeting AASHTO requirements to maximize safety and minimize impacts to public traffic. Also as discussed earlier in this section, our Team will install additional PCMS on I-95 in advance of the work zone.

Lane Closure Optimization

When construction starts, lane closure impact minimization will be critical when working along I-95 and Route 606. Our temporary traffic control strategy puts an emphasis on eliminating the need for temporary lane closures to the greatest extent possible. To coordinate and communicate temporary traffic operations and lane closures, our Team utilizes a specific scheduling "blocking plans" and "lane closure request forms" as an enhancement ***exceeding the RFP requirements***. The detailed schedule plan provides the Project Team the ability to ensure operations are not in conflict with adjacent projects and enables transparent communication between the construction team, VDOT, and project stakeholders.

To achieve the goals of maximizing safety and minimizing travel delays, we will collect updated 24-hour volume information along I-95 and Route 606 as an initial design activity, and perform a lane closure analysis. We recognize that the lane closure restriction times listed in Section 2.10.3 of the RFP are to be followed. However, we also know that closing lanes are public concerns, and we recognize constantly changing traffic volumes may be different in 2017 than previously collected volumes.

Figure 4.5.2.4 - 24 Hour Analysis

Figure 4.5.2.4 shows our 24-hour analysis results from a recent interstate project that we designed, where we verified that closures were limited to hours in which the traffic volumes (shown with blue and black lines) were less than the capacity of the remaining open travel lane (shown with red horizontal line). This same type of analysis will be performed by our Team during final design, and will be used to validate the RFP lane closure schedule to ensure unintended delays will not occur due to possible recent changes in traffic patterns. Seasonal variations on I-95 will also be considered, such as impacts during summer traffic. Furthermore, our Team commits to recounting traffic mid-way through construction to validate lane closure hours to ensure mobility impacts are minimized, ***providing a benefit that exceeds the RFP requirements.***

Stakeholder Communication and Mitigation Strategies

Our Team recognizes that proactive communication with project stakeholders is essential to a successful TMP. As with any large scale transportation project, some inconvenience is unavoidable, but our Team's goal is to minimize these impacts. ***We have proactively identified project stakeholders, and we have devised specific innovative communication and mitigation strategies that exceed the Project requirements.*** These include ***our commitment to exceed the RFP requirements*** with use additional PCMS signs for motorist guidance, committing to hold additional "Pardon our Dust" meetings, and utilizing enhanced safety devices. The stakeholders, their potential impacts, and our planned communication and mitigation strategies are detailed in Table 11 on the following page.

We have proactively identified project stakeholders, and have devised specific innovative communication and mitigation strategies that exceed the Project requirements.

Table 11 - Communication/Mitigation Strategies

Stakeholders	Impacts	Communication/Mitigation Strategies
Traveling Public & Local Residents	Minimal travel time delays for temporary operations	▪ Minimum of three "Pardon Our Dust" meeting for the general public, public safety officials, and other stakeholders during design and construction, especially before implementing major traffic pattern switches. ▪ All work operations behind barrier and maximizing lane widths. ▪ PCMS Signs will be utilized for public notices. ▪ Verification and optimization of lane closure hours.
Schools ▪ Riverview E.S. ▪ Thornburg M.S. ▪ Massaponax H.S.	Potential delays to school buses	▪ Coordination of construction activities directly with school staff ▪ No lane closures during school bus operating hours when possible ▪ Notification of temporary lane restrictions and changes to traffic patterns ▪ Temporary alignments are analyzed ensuring buses are accommodated using Auto-Turn software
Police, Fire & Rescue ▪ Fire-Rescue Station 2 ▪ Stafford Co Sheriff	Potential response time impact	▪ Notification of temporary lane restrictions and changes to traffic patterns ▪ Representatives will be notified of approved lane closure requests ▪ Pre-switch emergency responder meetings for response planning ▪ A 24/7 Shirley point of contact will be established
Regional Industrial and Farming Facilities	Potential impacts to distribution and delivery truck routes	▪ The Construction Team will notify these stakeholders of major construction activities that may affect business operations (such as temporary stoppages for bridge work) ▪ Temporary alignments will be analyzed to ensure large vehicles are accommodated using Auto-Turn software
Dominion Raceway	Construction operations possibly interfering with raceway	▪ Utilization of a liaison to coordinate construction activities and avoid conflicts ▪ The proposed traffic signal at the raceway access will be installed in Stage 2
Local Business Driveways	Possible disruption to business operations	▪ Access to all properties maintained at all times. ▪ Driveway reconstruction will be completed during non-business hours or low-traffic hours for 24 hour businesses.

4.6 - Disadvantaged Business Enterprises (DBE)

4.6 - Disadvantaged Business Enterprises (DBE)

4.6 DBE/Local Hiring Program

Commitment to Achieving the DBE Goal

Shirley Contracting Company, LLC (Shirley) is committed to achieving the 15% DBE participation goal for the Project for the entire value of the contract.

Shirley DBE Subcontracting Plan

The Shirley Team consistently meets or exceeds the DBE goals set on all our Projects. Our Team has and continues to develop lasting relationships with many high respected firms to include: Diversified Property Services, Inc., GeoConcepts Engineering, and Quinn Consulting Services, Inc. We have successfully worked with these firms on multiple VDOT Design-Build projects.

The following outlines the steps that we will take to meet or exceed the DBE requirement:

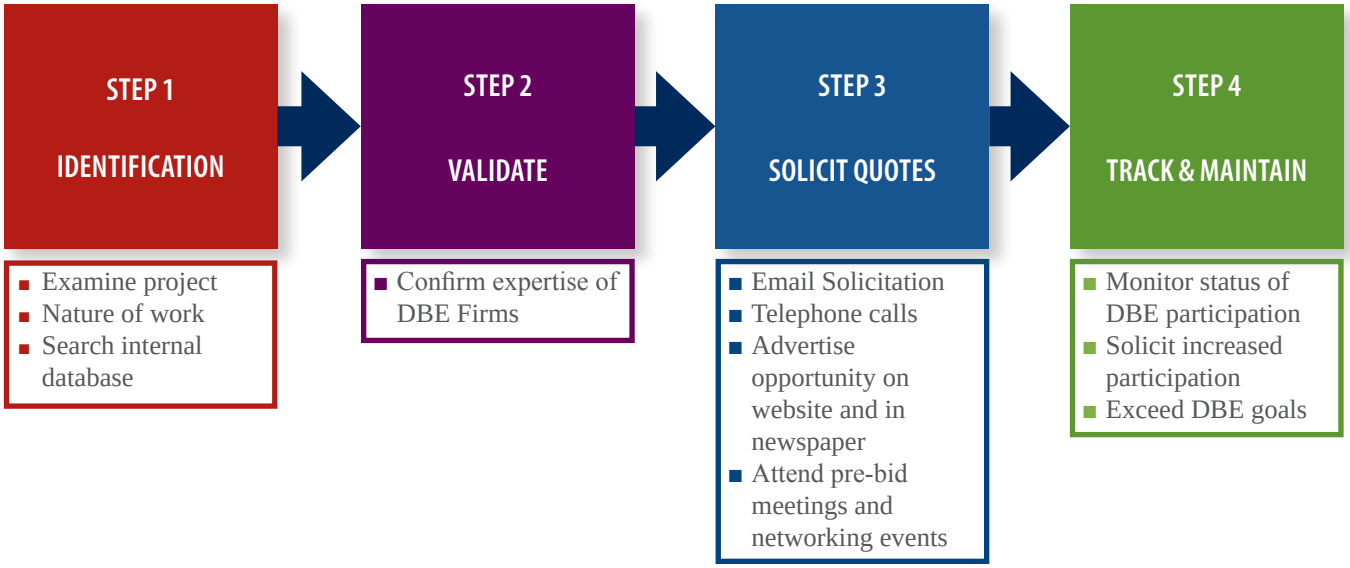

4.7 - Proposal Schedule

4.7 Proposal Schedule

4.7.1 Proposal Schedule

The Shirley Team's Preliminary Proposal Schedule is provided in Volume II.

4.7.2 Proposal Schedule Narrative

The Shirley Team has developed and optimized our Project Schedule and sequence of construction to remove traffic from the existing Route 606 Bridge Over I-95 by November 1, 2018 (our Team's ***Unique Milestone***). In addition, our schedule demonstrates achieving the ***Early Completion – No Excuses Incentive on June 20, 2019.*** Table 12 summarizes our key Contract Schedule Milestones:

Table 12 - Contract Schedule and Milestones

Key Activity Summary	Date
Notice of Intent to Award	October 12, 2016
Design / Build Contract Execution	December 14, 2016
Notice to Proceed	December 16, 2016*
VDOT Issues Partial NTCC (Bridge)	September 20, 2017
VDOT Issues Complete NTCC	October 24, 2017
Shirley's Unique Milestone – Close Existing Bridge to Traffic	November 1, 2018*
Early Completion – No Excuse Incentive Date (6/20/2019)	June 20, 2019
Final Completion	September 18, 2019*

**Contractual Date*

Work Breakdown Structure

The Work Breakdown Structure (WBS) is broken into preconstruction and construction activities. For preconstruction scope, the WBS details various work elements. For construction, the WBS is broken down by phases of construction as described in Section 4.5.1. The phasing was determined through the optimization of the maintenance of traffic as well as the Team's goal of closing the existing bridge as early as possible. The WBS is further broken down as follows:

A. ***Project Milestones:*** Area reserved for easy review of the Project status.

B. ***Design:*** Includes preliminary engineering services, plan development, QA/QC reviews, submittal milestones, and reviews by VDOT, FHWA and other regulatory agencies and approvals of plans. This section of the schedule includes a second level WBS structure to group design activities by type of design submission including right-of-way, roadway, bridge and utility (waterline and sanitary sewer).

C. ***Right-of-way Acquisition:*** This section of the schedule is used to monitor the acquisition of right-of-way and easements for the Project including title searches, appraisals and appraisal reviews, offers, negotiations, and settlements. As a result of our unique design concept avoiding multiple properties impacted by the RFP concept, the Project only requires one phase of right-of-way acquisition activities. Furthermore, our design concept allows for early access to construction as the majority of construction is contained within existing VDOT right-of-way. This advantage also allows for single phase construction of the replacement bridge over I-95.

D. *Public Involvement:* This section of the schedule includes milestones for planned public involvement meetings and updates to the Office of Public Affairs for major traffic shifts and the VDOT website.

E. *Utility Relocations:* The utility relocation section of the schedule includes activities for UFI meetings, preparation of preliminary engineering (PE) estimates, approval of PE estimates, utility relocation design by the utility owner, approval of the utility design, and utility relocation construction. The utility relocations are separated into second level WBS groups by utility owner.

F. *Environmental Permitting:* Includes wetland and stream delineations and jurisdictional determination, permit management and preparation, mitigation, and permit submissions, reviews and approvals. Initial efforts will focus on the COE Individual Permit, Virginia Water Protection Individual Permit, LD-445/ VPDES Permit and the SWPPP submission.

G. *Construction:* Includes all components of roadway, bridge, retaining walls, and culverts, as well as MOT, construction access, signing, signals, electrical and drainage. The Construction section of the schedule is segmented by additional levels of WBS structure to divide the construction activities into groups of work packages that can be easily tracked to ensure on-time completion of the Project.

Table 13 is a complete outline of the WBS Structure for the Project:

Table 13 - WBS Structure

WBS Path	WBS Name
1	**Schedule Milestones**
2	**Phase 1 - Project Management**
2.1	**Design Phase** 2.1.1 – Preliminary Design 2.1.2 – Right-Of-Way Plans 2.1.3 – Geotechnical Investigation and Report 2.1.4 – Roadway Design and IMR 2.1.5 – Bridge Design 2.1.6 – Utility Design (Waterline and Sanitary Sewer)
2.2	**Right of Way Acquisition** 2.2.1 – Acquisition Process
2.3	**Public Outreach** 2.3.1 - Public Involvement 2.3.2 - Public Affairs Updates
2.4	**Utility Relocations** 2.4.1 – Power Distribution 2.4.2 – Sanitary Sewer 2.4.3 – Water Distribution 2.4.4 – Summit IG – VDOT Communications 2.4.5 – Comcast - Communications 2.4.6 – Verizon - Communications
2.5	**Permitting** 2.5.1 – Threatened & Endangered Species 2.5.2 – LD 445/Stormwater Permit 2.5.3 – Joint Wetlands and Waters Permitting 2.5.4 – Hazardous Materials & Spill Prevention Pollution Plan
3	**Phase 2 - Construction**
3.1	**Administration & PIM**
3.2	**Project General Items**

WBS Path	WBS Name
3.3	**Stage 1** 3.3.1 – Route 606 Bridge Over I-95 3.3.1.1 – Abutments 3.3.1.1.1 – Abutment A 3.3.1.1.2 – Abutment B 3.3.1.2 – Pier Construction 3.3.1.3 – Superstructure 3.3.1.4 – Approach Slabs 3.3.2 – Construct Bridge Tie-In Northeast Quadrant 3.3.3 – Construct Bridge Tie-In Northwest Quadrant 3.3.4 – Northbound Ramp From New Bridge To Existing Ramp 3.3.5 – I-95 To Mallard Road 3.3.6 – Northbound Ramp – Mallard Road To Existing Bridge 3.3.7 – Mallard Road To I-95 Ramp Connections 3.3.8 – Construct Southbound Mallard Road 3.3.8.1 – Reconstruct NB Mallard and Eastbound Route 606 3.3.9 – Westbound Route 606 From DRW to Exit Northbound Ramp 3.3.10 – Construct Signal Route 606/Mallard/DRW 3.3.11 – Open New Bridge Over I-95 and Intersection
3.4	**Stage 2** 3.4.1 – Demolish Existing Bridge 3.4.1.1 – Span 4 and 3 3.4.1.2 – Spans 2 and 1 3.4.2 – Excavate/Grade/Pave Remainder Northbound I-95 Ramp 3.4.3 – Construct Concrete Islands 3.4.4 – Finalize Bridge Walls
3.5	**Stage 3** 3.5.1 – Obscure Pavement 3.5.2 – Surface/Mill/Overlay Tie-Ins 3.5.3 – Final Stabilize Grade 3.5.4 – Inspect, Punchlist, Demobilize & Closeout

Global Calendar

All calendars are based on eight hour work days and include the following holidays:

Calendar 01 - "5 DAY WORKWEEK W/HOLIDAYS" – this calendar is based on five working days per week and is used for all design, administrative, and construction activities that are outside of the winter weather months. Saturdays are typically reserved for weather make-up days.

Calendar 02 – "7 DAY WORKWEEK" – Assigned to activities that have durations based on calendar days instead of work days. For example VDOT's 21 calendar day review duration.

Calendar 03 – "WINTER SD" – Assigned to activities that are anticipated to be shut down during the winter, such as asphalt paving and painting. This calendar contains no working days from December 24 of one year to March 14 of the next year.

Schedule Timing and Critical Path

The following narrative describes key activities in the sequence of design, planning, permitting, pre-construction, and construction phase of the Project. Each of these activities can be found in the attached Proposal Schedule.

Design Phase

The Design section includes activities related to the Design efforts prior to the commencement of construction.

- ***Preliminary Design -*** This section includes activities related to obtaining data to establish base files for project design. CPM schedule submission dates and approvals are also included in this section.
- ***Right-of-Way Plans -*** This section includes activities related to the preparation, submission and approval of plans leading to VDOT issuing Notice to Commence Right of Way Acquisition.
- ***Geotechnical -*** This section includes activities related to any additional soil borings, geotechnical analysis or design necessary to be performed.
- ***Roadway Design -*** This section includes activities related to the preparation, submission and approval of construction plans. Final roadway plans will include final drainage and SWM reports. The final plans will be broken into packages to minimize schedule delays and provide flexibility for planning purposes. This section includes the Interchange Modification Report (IMR).
- ***Bridge Design -*** This section includes activities related to the design, submission and approval of the bridge structure over I-95.
- ***Utility Design (Waterline and Sanitary Sewer) -*** This section includes activities for the plan preparation and design coordination with Spotsylvania County for any conflict relocation identified.

Right-of-Way Acquisition

The right-of-way acquisition section includes activities related to the coordination between our Team and VDOT to acquire the ROW including but not limited to all temporary and permanent construction and utilities easements and property. The ROW acquisition will be grouped into individual parcel groups to minimize schedule delays and provide flexibility for planning.

- ***Site Assessments & Appraisals -*** This section includes activities related to the necessary site investigations and appraisals required for the affected properties.
- ***Negotiations -*** This section contains activities pertaining to the negotiation period required for parcels impacted by the Project.
- ***Settlements, Right of Entries & Certificates -*** This section includes the activities related to the completion of the acquisition process.

Public Involvement

The Public Involvement section contains activities necessary for public communication and outreach.

- ***Emergency Contact Plan -*** This section includes activities related to the submission and implementation of the emergency contact plan.
- ***Pardon Our Dust/Citizen Outreach Meetings -*** This section tracks any and all public outreach and public information meetings held for the Project.

Utility Relocations

The Utility Relocations section contains activities involved with the design, approval and resolution of utility conflicts identified throughout the Project by various different methods. The WBS breaks down each individual utility conflict into the following subcategories.

- ***Prepare Plans & Estimates -*** This section includes the activities required to meet with the individual utility companies, develop the relocation plans and the scope. This also involves the plan submittals and approvals through VDOT.
- ***Utility Relocations -*** This sections contains the activities related to the actual relocation of the individual utility conflicts identified on the Project.

Environmental Permitting

The Environmental Permitting section contains activities pertinent to the evaluation, preparation, submission and approval of any and all environmental permits required for the Project.

- ***Threaten & Endangered Species -*** This section contains activities related to the determination of the existence of Threatened & Endangered Species and coordination with appropriate permitting agencies to mitigate or avoid impacts to habitat.
- ***LD 445 / SWPPP Permitting -*** This section includes activities regarding the submission and approval of the SWPPP Certifications and permits required for the Project.
- ***Joint Wetlands and Waters Permitting -*** This section contains activities related to the preparation and acquisition of the individual wetlands permit that are anticipated to be needed for the Project. It allows for appropriate delineations, minimization studies and coordination with appropriate permitting agencies.
- ***Hazardous Material & Spill Prevention Plan -*** This section includes activities regarding the evaluation of RFP identified hazardous areas and the development, submission and approval of the SPCC plan for the Project.

Construction

The Construction section of the schedule includes all of the activities related to the actual construction of the approved design. The WBS for Construction is further broken down into the different stages and areas of the job to track intermediate progress throughout the Project. It also includes the different definable features of work located within each area and each stage.

Administration & PIM

- Generate structural design and shop drawings for all precast and steel elements; and
- Perform preparatory meetings for all definable features of work.

Project General Items

- Mobilize to the project site;
- Setup field offices & staging area;
- Initial survey controls; and
- Establish MOT devices and construction signage throughout the project.

STAGE 1

Route 606 Bridge Over I-95

- Shore, excavate and install abutment foundations and MSE walls up through to abutment footing;
- Cast and cure abutment footings and beam seats;
- Set abutment coping prior to setting bridge beams;
- After casting bridge footings begin to construction bridge pier;
- Excavate and shore for pier foundation construction;
- Construct bridge pier and pier protection;
- Erect bridge beams, set deck overhang, SIP deck forms, and install reinforcing steel;
- Form and cast abutment backwalls followed by installation of upper level MSE Walls;
- Begin settlement period for bridge abutments;
- Set up Bidwell, cast and cure bridge deck and continuity diaphragm;
- Install parapets, BR-27 railing, pedestrian fence, and groove deck;
- Install base aggregate and cast approach slab; and
- VDOT perform safety inspection.

Construct Bridge Tie-In Northeast Quadrant

- Set MOT, E&S controls, and begin with clearing & grubbing;
- Strip topsoil, perform earthworks, establish drainage, and grade in slopes; and
- Establish pavement sections.

Construct Bridge Tie-In Northwest Quadrant

- Set MOT, E&S controls, and begin with clearing & grubbing;
- Strip topsoil, perform earthworks, establish drainage, and grade in slopes; and
- Establish pavement sections.

Northbound Ramp From Bridge To Existing Ramp

- Set MOT, E&S controls, and begin with clearing & grubbing;
- Strip topsoil, perform earthworks, establish drainage, and grade in slopes; and
- Establish pavement sections.

I-95 To Mallard Road

- Set MOT, E&S controls, and begin with clearing & grubbing;
- Strip topsoil, perform earthworks, establish drainage, and grade in slopes; and
- Establish pavement sections.

Northbound Ramp – Mallard Road to Existing Bridge

- Northbound Ramp – Mallard Road to Existing Bridge
- Set MOT, E&S controls, and begin with clearing & grubbing;
- Strip topsoil, perform earthworks, establish drainage, and grade in slopes; and
- Establish pavement sections.

Mallard Road to I-95 Ramp Connections

- Set MOT, E&S controls, and begin with clearing & grubbing;
- Strip topsoil, perform earthworks, establish drainage, and grade in slopes; and
- Establish pavement sections.

Construct Southbound Mallard Road

- Set MOT, E&S controls, and begin with clearing & grubbing;
- Strip topsoil, perform earthworks, establish drainage, and grade in slopes; and
- Establish pavement sections.

Reconstruct Northbound Mallard and Eastbound Route 606

- Set MOT, E&S controls, and begin with clearing & grubbing;
- Strip topsoil and relocate utilities along Mallard Road;
- Perform earthworks, establish drainage, and grade in slopes; and
- Establish pavement sections.

Westbound Route 606 From DRW to Exit Northbound Ramp

- Set MOT, E&S, and begin with clearing & grubbing;
- Strip topsoil and relocate utilities along Dominion Raceway Entrance;
- Perform earthworks, establish drainage, and grade in slopes; and
- Establish pavement sections.

Construct Signals I-95 / Route 606 / Mallard / DRW

- Install VDOT type electrical service, set MOT for foundations;
- Drill and cast signal foundations, followed with installation of traffic signals; and
- Perform burn-in period and activate to full color operation.

Open New Bridge Over I-95 and Interchange

- Perform final preparations to open new bridge.

STAGE 2

Demolish Existing Bridge

- Mobilize demolition crew to site for bridge removal and set MOT for operations;
- Demolish Span 4 and abutment B;
- Demolish Span 3 and pier;
- Demo Spans 2 then 1; and
- Demo Pier 2, 1 and abutment A along with slope protection.

Excavate/Grade/Pave Remainder Northbound I-95 On-Ramp

- Perform earthworks, establish drainage, and grade in slopes; and
- Establish pavement sections and open ramp to traffic.

Construct Concrete Islands

- Sawcut, install curb, install sidewalk, and grade islands.

Finalize Bridge Walls

- Install face of wall for on bridge.

STAGE 3

Obscure Pavement

- Remove pavement from old ramps, grade and spread topsoil.

Surface/Mill/Overlay Tie-Ins

- Mill pavement for ramp tie-in; and
- Apply surface pavement throughout the Project.

Final Stabilize Grade

- Establish final grade and stabilize soils.

Inspect, Punchlist, Demobilize & Closeout

- Package field documentation in preparation for closing out project; and
- Coordinate and complete punchlist and demobilize.

Critical Path Description

GENERAL PROJECT MILESTONES

- Notice to Proceed

PHASE 1 - PROJECT MANAGEMENT

Design Phase, Geotechnical Investigation and Report

- Prepare/Submit Soil Boring Location Plan

- Review/Approve Soil Boring Location Plan (Internal Only)
- Survey Layout Soil Boring Locations
- Geotechnical Filed Investigation
- Lab Sampling and Field Data Compilation
- Prepare/Submit Bridge Geotechnical Engineer Report (GER)
- Review/Approve Bridge GER (90 Day Review for D/B Projects)

Bridge Design

- Submit Final Bridge Plan
- VDOT / FHWA Review / Comment Bridge Plans (Final Submission)
- Final Plan Approved (Bridge)

PHASE 2 - CONSTRUCTION

Administration & PIM

- Design Bridge Beams
- Review/Approve Shop Drawings
- Fabricate Bridge Beams
- QA/QC Preparatory Inspection Meeting – Beam Erection

Project General Items

- Mobilization For Construction
- Setup Field Offices & Staging Area
- Initial Survey Controls
- Initial MOT Devices / Construction Signing

Stage 1, 606 Bridge Over I-95, Superstructure

- Mobilize Structural Erectors
- Erect Bridge Span A
- Erect Bridge Span B
- Install Bridge Deck Overhangs
- Install SIP Decking
- Place Reinforcing Steel
- Mobilize Bidwell to Project
- Dry Run Screed
- Cast Deck Segment 1 (Span A)
- Cast Deck Segment 2 (Span B)
- Install Continuity Diaphram/Closure
- Cast Deck Segment 3 (Abutment A Joint)
- Cast Deck Segment 4 (Abutment B Joint)
- Cast Deck Segment 5 (Pier 1 Closure)
- Install Parapets
- BR-27/Fence
- Groove Bridge Deck
- Perform Safety Inspection

GENERAL PROJECT MILESTONES

- Unique Milestone Close Existing Bridge to Traffic

Stage 2, Demolish Existing Bridge

- Mobilize Demolition Crew

Span 4 and 3

- Demo Existing Bridge – Span 4 and Abutment B
- Demo Existing Bridge – Span 3 and Pier

Excavate/Grade/Pave Remainder NB I-95 Ramp

- Earthworks Cut/Fill
- Establish Open/Closed Drainage
- Grade Slopes
- Place Compact Base Aggregate
- Underdrain Installation
- Base Asphalt
- Intermediate Asphalt
- Temp Pavement Markings
- Install Traffic Signage/Cover
- Open Ramp "B" to Traffic

Stage 3, Obscure Pavement

- Mill/Excavate/Haul Pavement

Surface/Mill/Overlay Tie-Ins

- Mill/Pave Surface For Ramp Tie-ins
- Surface Pave/Final Stripe

Final Stabilize Grade

- Finalize Grade and Seed

Inspect, Punchlist, Demobilize & Closeout

- Design-Builder Request VDOT Inspection
- VDOT Performs Inspection
- VDOT Provides Punchlist
- Design-Builder Addresses Punchlist
- Punchlist Verification Inspection Performed

GENERAL PROJECT MILESTONES

- Early Completion – No Excuse Incentive Date (6/20/2019)
- No Excuse Incentive Daily Rate
- Final Completion

Means and Methods

The following is a list of means and methods we plan on implementing on the Project:

- Our unique design concept allows for a single phase construction of the Route 606 bridge over I-95 and the elimination of the longitudinal joint. The means and methods of this concept will result in a high quality, safe structure; and
- Installation of bridge girders.
  - Off peak construction - Night time operation ensuring safety of motorists.

Key Assumptions

- VDOT and FHWA approval of IMR, environmental re-evaluation and public process.
- The limited access line will be set along the west side of existing Mallard road allowing utilities to remain within the existing roadway as discussed in the proprietary meeting.
- Utility companies will coordinate their relocations in accordance with our Project Schedule.
- Hazardous material will not delay the Project Schedule.

- No threatened & endangered species, or unforeseen environmental constraints, other than those identified in the RFP, that could delay the Project Schedule.
- Crew leveling has been developed through crew-flow relationships between like activities.

Summary

Our Team's comprehensive preproposal preparation, proven experience in all phases of design-build, and extensive project controls and schedule management and recovery techniques ensures that the Project will complete on schedule. Over the years, we have built a solid professional reputation on meeting our commitments, completing projects ahead of schedule and under budget, performing quality work in a safe work environment, and establishing a problem-solving atmosphere and partnership with the Owner. This is a result of our extensive experience, quality people, and corporate commitment. The Route 606 Bridge Replacement Over I-95 with 606 Improvements Project is a challenging and exciting Project for our Team and is one that we will bring this same level of commitment to for the benefit of VDOT, Spotsylvania County, Dominion Race Way, local businesses and the public.

Appendix

Attachment 4.0.1.1 - Technical Proposal Checklist

Attachment 4.0.1.1 - Technical Proposal Checklist

ATTACHMENT 4.0.1.1

Route 606 Bridge Replacement over I-95 with 606 Improvements

TECHNICAL PROPOSAL CHECKLIST AND CONTENTS

Offerors shall furnish a copy of this Technical Proposal Checklist, with the page references added, with the Technical Proposal.

Technical Proposal Component	Form (if any)	RFP Part 1 Cross Reference	Included within page limit?	Technical Proposal Page Reference
Technical Proposal Checklist and Contents	Attachment 4.0.1.1	Section 4.0.1.1	no	N/A
Acknowledgement of RFP, Revisions, and/or Addenda	Attachment 3.6 (Form C-78-RFP)	Sections 3.6, 4.0.1.1	no	N/A
Letter of Submittal	NA	Sections 4.1		
Letter of Submittal on Offeror's letterhead	NA	Section 4.1.1	yes	1
Identify the full legal name and address of Offeror	NA	Section 4.1.1	yes	1
Authorized representative's original signature	NA	Section 4.1.1	yes	1
Declaration of intent	NA	Section 4.1.2	yes	1
120 day declaration	NA	Section 4.1.3	yes	1
Point of Contact information	NA	Section 4.1.4	yes	1
Principal Officer information	NA	Section 4.1.5	yes	1
Final Completion Date	NA	Section 4.1.6	yes	1
Proposal Payment Agreement or Waiver of Proposal Payment	Attachment 9.3.1 or 9.3.2	Section 4.1.7	no	N/A
Certification Regarding Debarment Forms	Attachment 11.8.6(a) Attachment 11.8.6(b)	Section 4.1.8	no	N/A
Offeror's Qualifications	NA	Section 4.2		

ATTACHMENT 4.0.1.1

Route 606 Bridge Replacement over I-95 with 606 Improvements

TECHNICAL PROPOSAL CHECKLIST AND CONTENTS

Technical Proposal Component	Form (if any)	RFP Part 1 Cross Reference	Included within page limit?	Technical Proposal Page Reference
Confirmation that the information provided in the SOQ submittal remains true and accurate or indicates that any requested changes were previously approved by VDOT	NA	Section 4.2.1	yes	2
Organizational chart with any updates since the SOQ submittal clearly identified	NA	Section 4.2.2	yes	2
Revised narrative when organizational chart includes updates since the SOQ submittal	NA	Section 4.2.2	yes	2
Design Concept	NA	Section 4.3		3-14
Conceptual Roadway Plans and description	NA	Section 4.3.1.1	yes	3-10
Conceptual Structural Plans and description	NA	Section 4.3.1.2	yes	10-14
Project Approach	NA	Section 4.4		15-30
Environmental Management	NA	Section 4.4.1	yes	15-17
Utilities	NA	Section 4.4.2	yes	17-20
Geotechnical	NA	Section 4.4.3	yes	21-24
Quality Assurance/ Quality Control (QA/QC)	NA	Section 4.4.4	yes	24-30
Construction of Project	NA	Section 4.5		31-44
Sequence of Construction	NA	Section 4.5.1	yes	31-37
Transportation Management Plan	NA	Section 4.5.2	yes	37-44

ATTACHMENT 4.0.1.1

Route 606 Bridge Replacement over I-95 with 606 Improvements

TECHNICAL PROPOSAL CHECKLIST AND CONTENTS

Technical Proposal Component	Form (if any)	RFP Part 1 Cross Reference	Included within page limit?	Technical Proposal Page Reference
Disadvantaged Business Enterprises (DBE)	NA	Section 4.6		45
Written statement of percent DBE participation	NA	Section 4.6	yes	45
Proposal Schedule	NA	Section 4.7		N/A
Proposal Schedule	NA	Section 4.7	no	N/A
Proposal Schedule Narrative	NA	Section 4.7	no	N/A
Proposal Schedule in electronic format (CD-ROM)	NA	Section 4.7	no	N/A

Attachment 3.6 - Form C-78

Attachment 3.6 - Form C-78

Form C-78-RFP

ATTACHMENT 3.6

COMMONWEALTH OF VIRGINIA
DEPARTMENT OF TRANSPORTATION

RFP NO. C00105463DB89

PROJECT NO.: 0606-088-653 & 0606-088-622

ACKNOWLEDGEMENT OF RFP, REVISION AND/OR ADDENDA

Acknowledgement shall be made of receipt of the Request for Proposals (RFP) and/or any and all revisions and/or addenda pertaining to the above designated project which are issued by the Department prior to the Letter of Submittal submission date shown herein. Failure to include this acknowledgement in the Letter of Submittal may result in the rejection of your proposal.

By signing this Attachment 3.6, the Offeror acknowledges receipt of the RFP and/or following revisions and/or addenda to the RFP for the above designated project which were issued under cover letter(s) of the date(s) shown hereon:

1. Cover letter of RFP – April 27, 2016 (Date)
2. Cover letter of RFP Addendum #1 – June 8, 2016 (Date)
3. Cover letter of RFP Addendum #2 – July 20, 2016 (Date)
4. Cover letter of RFP Addendum #3 – July 27, 2016 (Date)
5. Cover letter of RFP Addendum #4 – August 17, 2016 (Date)

SIGNATURE

August 22, 2016
DATE

Michael E. Post
PRINTED NAME

President/CEO/Manager
TITLE

Attachment 9.3.1 - Proposal Payment Agreement

Attachment 9.3.1 - Proposal Payment Agreement

ATTACHMENT 9.3.1
PROPOSAL PAYMENT AGREEMENT

THIS PROPOSAL PAYMENT AGREEMENT (this "Agreement") is made and entered into as of this 22nd day of August, 20 16, by and between the Virginia Department of Transportation ("VDOT"), and Shirley Contracting Company, LLC ("Offeror").

WITNESSETH:

WHEREAS, Offeror is one of the entities who submitted Statements of Qualifications ("SOQs") pursuant to VDOT's December 8, 2015 Request for Qualifications ("RFQ") and was invited to submit proposals in response to a Request for Proposals ("RFP") for the **Route 606 Bridge Replacement over I-95 with 606 Improvements, Project No. 0606-088-653 & 0606-088-622** ("Project"), under a design-build contract with VDOT ("Design-Build Contract"); and

WHEREAS, as part of the procurement process for the Project, Offeror has already provided and/or furnished to VDOT, and may continue to provide and/or furnish to VDOT, certain intellectual property, materials, information and ideas, including, but not limited to, such matters that are: (a) conveyed verbally and in writing during proprietary meetings or interviews; and (b) contained in, related to or associated with Offeror's proposal, including, but not limited to, written correspondence, designs, drawings, plans, exhibits, photographs, reports, printed material, tapes, electronic disks, or other graphic and visual aids (collectively "Offeror's Intellectual Property"); and

WHEREAS, VDOT is willing to provide a payment to Offeror, subject to the express conditions stated in this Agreement, to obtain certain rights in Offeror's Intellectual Property, provided that Offeror submits a proposal that VDOT determines to be responsive to the RFP ("Offeror's Proposal"), and either (a) Offeror is not awarded the Design-Build Contract; or (b) VDOT cancels the procurement or decides not to award the Design-Build Contract to any Offeror; and

WHEREAS, Offeror wishes to receive the payment offered by VDOT, in exchange for granting VDOT the rights set forth in this Agreement.

NOW, THEREFORE, in consideration of the mutual covenants and agreements set forth in this Agreement and other good and valuable consideration, the receipt and adequacy of which are acknowledged by the parties, the parties agree as follows:

1. **VDOT's Rights in Offeror's Intellectual Property**. Offeror hereby conveys to VDOT all rights, title and interest, free and clear of all liens, claims and encumbrances, in Offeror's Intellectual Property, which includes, without restriction or limitation, the right of VDOT, and anyone contracting with VDOT, to incorporate any ideas or information from Offeror's Intellectual Property into: (a) the Design-Build Contract and the Project; (b) any other contract awarded in reference to the Project; or (c) any subsequent procurement by VDOT. In receiving all rights, title and interest in Offeror's Intellectual Property, VDOT is deemed to own all intellectual property rights, copyrights, patents, trade secrets, trademarks, and service marks in Offeror's Intellectual Property, and Offeror agrees that it shall, at the request of VDOT, execute all papers and perform all other acts that may be necessary to ensure that VDOT's rights, title and interest in Offeror's Intellectual Property are protected. The rights conferred herein to VDOT include, without limitation, VDOT's ability to use Offeror's Intellectual Property without the obligation to notify or seek permission from Offeror.

2. **Exclusions from Offeror's Intellectual Property**. Notwithstanding Section 1 above, it is understood and agreed that Offeror's Intellectual Property is not intended to include, and Offeror does not convey any rights to, the Escrow Proposal Documents submitted by Offeror in accordance with the RFP.

3. **Proposal Payment**. VDOT agrees to pay Offeror the lump sum amount of **fourteen thousand and 00/100 Dollars ($14,000.00)** ("Proposal Payment"), which payment constitutes payment in full to Offeror for the conveyance of Offeror's Intellectual Property to VDOT in accordance with this Agreement. Payment of the Proposal Payment is conditioned upon: (a) Offeror's Proposal being, in the sole discretion of VDOT, responsive to the RFP; (b) Offeror complying with all other terms and conditions of this Agreement; and (c) either (i) Offeror is not awarded the Design-Build Contract, or (ii) VDOT cancels the procurement or decides not to award the Design-Build Contract to any Offeror.

4. **Payment Due Date**. Subject to the conditions set forth in this Agreement, VDOT will make payment of the Proposal Payment to the Offeror within forty-five (45) days after the later of: (a) notice from VDOT that it has awarded the Design-Build Contract to another Offeror; or (b) notice from VDOT that the procurement for the Project has been cancelled and that there will be no Contract Award.

5. **Effective Date of this Agreement**. The rights and obligations of VDOT and Offeror under this Agreement, including VDOT's ownership rights in Offeror's Intellectual Property, vests upon the date that Offeror's Proposal is submitted to VDOT. Notwithstanding the above, if Offeror's Proposal is determined by VDOT, in its sole discretion, to be nonresponsive to the RFP, then Offeror is deemed to have waived its right to obtain the Proposal Payment, and VDOT shall have no obligations under this Agreement.

6. **Indemnity**. Subject to the limitation contained below, Offeror shall, at its own expense, indemnify, protect and hold harmless VDOT and its agents, directors, officers, employees, representatives and contractors from all claims, costs, expenses, liabilities, demands, or suits at law or equity ("Claims") of, by or in favor of or awarded to any third party arising in whole or in part from: (a) the negligence or wilful misconduct of Offeror or any of its agents, officers, employees, representatives or subcontractors; or (b) breach of any of Offeror's obligations under this Agreement, including its representation and warranty under Section 8 hereof. This indemnity shall not apply with respect to any Claims caused by or resulting from the sole negligence or wilful misconduct of VDOT, or its agents, directors, officers, employees, representatives or contractors.

7. **Assignment**. Offeror shall not assign this Agreement, without VDOT's prior written consent, which consent may be given or withheld in VDOT's sole discretion. Any assignment of this Agreement without such consent shall be null and void.

8. **Authority to Enter into this Agreement**. By executing this Agreement, Offeror specifically represents and warrants that it has the authority to convey to VDOT all rights, title, and interest in Offeror's Intellectual Property, including, but not limited to, those any rights that might have been vested in team members, subcontractors, consultants or anyone else who may have contributed to the development of Offeror's Intellectual Property, free and clear of all liens, claims and encumbrances.

9. **Miscellaneous**.

a. Offeror and VDOT agree that Offeror, its team members, and their respective employees are not agents of VDOT as a result of this Agreement.

b. Any capitalized term used herein but not otherwise defined shall have the meanings set forth in the RFP.

c. This Agreement, together with the RFP, embodies the entire agreement of the parties with respect to the subject matter hereof. There are no promises, terms, conditions, or obligations other than those contained herein or in the RFP, and this Agreement shall supersede all previous communications, representations, or agreements, either verbal or written, between the parties hereto.

d. It is understood and agreed by the parties hereto that if any part, term, or provision of this Agreement is by the courts held to be illegal or in conflict with any law of the Commonwealth of Virginia, validity of the remaining portions or provisions shall not be affected, and the rights and obligations of the parties shall be construed and enforced as if the Agreement did not contain the particular part, term, or provisions to be invalid.

e. This Agreement shall be governed by and construed in accordance with the laws of the Commonwealth of Virginia.

IN WITNESS WHEREOF, this Agreement has been executed and delivered as of the day and year first above written.

VIRGINIA DEPARTMENT OF TRANSPORTATION

By: _____

Name: _____

Title: _____

Shirley Contracting Company, LLC

By: _____

Name: Michael E. Post

Title: President/CEO/Manager

Attachment 11.8.6(a)(b) - Certification Regarding Debarment

Attachment 11.8.6(a)(b) - Certification Regarding Debarment

ATTACHMENT 11.8.6(a)
CERTIFICATION REGARDING DEBARMENT
PRIMARY COVERED TRANSACTIONS

Project No.: 0606-088-653 & 0606-088-622

1) The prospective primary participant certifies to the best of its knowledge and belief, that it and its principals:

a) Are not presently debarred, suspended, proposed for debarment, declared ineligible, or voluntarily excluded from covered transactions by any Federal department or agency.

b) Have not within a three-year period preceding this proposal been convicted of or had a civil judgment rendered against them for commission of fraud or a criminal offense in connection with obtaining, attempting to obtain, or performing a public (Federal, State or local) transaction or contract under a public transaction; and have not been convicted of any violations of Federal or State antitrust statutes or commission of embezzlement, theft, forgery, bribery, falsification, or destruction of records, making false statements, or receiving stolen property;

c) Are not presently indicted for or otherwise criminally or civilly charged by a governmental entity (Federal, State or local) with commission of any of the offenses enumerated in paragraph 1) b) of this certification; and

d) Have not within a three-year period preceding this application/proposal had one or more public transactions (Federal, State or local) terminated for cause or default.

2) Where the prospective primary participant is unable to certify to any of the statements in this certification, such prospective participant shall attach an explanation to this proposal.

The undersigned makes the foregoing statements to be filed with the proposal submitted on behalf of the Offeror for contracts to be let by the Commonwealth Transportation Board.

	August 16, 2016	President/CEO/Manager
Signature	Date	Title

Shirley Contracting Company, LLC
Name of Firm

ATTACHMENT NO. 3.2.7(b)

CERTIFICATION REGARDING DEBARMENT
LOWER TIER COVERED TRANSACTIONS

Project No.: 0606-088-653, C501 & 0606-088-622, C501, B634

1) The prospective lower tier participant certifies, by submission of this proposal, that neither it nor its principals is presently debarred, suspended, proposed for debarment, declared ineligible, or voluntarily excluded from participation in this transaction by any Federal department or agency.

2) Where the prospective lower tier participant is unable to certify to any of the statements in this certification, such prospective participant shall attach an explanation to this form.

The undersigned makes the foregoing statements to be filed with the proposal submitted on behalf of the Offeror for contracts to be let by the Commonwealth Transportation Board.

Dave Mahoney 8/15/16 Executive Vice President
Signature Date Title

Dewberry Consultants LLC
Name of Firm

ATTACHMENT NO. 3.2.7(b)

CERTIFICATION REGARDING DEBARMENT
LOWER TIER COVERED TRANSACTIONS

Project No.: 0606-088-653, C501 & 0606-088-622, C501, B634

1) The prospective lower tier participant certifies, by submission of this proposal, that neither it nor its principals is presently debarred, suspended, proposed for debarment, declared ineligible, or voluntarily excluded from participation in this transaction by any Federal department or agency.

2) Where the prospective lower tier participant is unable to certify to any of the statements in this certification, such prospective participant shall attach an explanation to this form.

The undersigned makes the foregoing statements to be filed with the proposal submitted on behalf of the Offeror for contracts to be let by the Commonwealth Transportation Board.

	8/15/16	President
Signature	Date	Title

GeoConcepts Engineering, Inc.
Name of Firm

ATTACHMENT 11.8.6(b)
CERTIFICATION REGARDING DEBARMENT
LOWER TIER COVERED TRANSACTIONS

Project No.: 0606-088-653 & 0606-088-622

1) The prospective lower tier participant certifies, by submission of this proposal, that neither it nor its principals is presently debarred, suspended, proposed for debarment, declared ineligible, or voluntarily excluded from participation in this transaction by any Federal department or agency.

2) Where the prospective lower tier participant is unable to certify to any of the statements in this certification, such prospective participant shall attach an explanation to this proposal.

The undersigned makes the foregoing statements to be filed with the proposal submitted on behalf of the Offeror for contracts to be let by the Commonwealth Transportation Board.

	August 15, 2016	VP of Business Development
Signature	Date	Title

DIW Group, Inc. t/a Specialized Engineering
Name of Firm

ATTACHMENT 11.8.6(b)
CERTIFICATION REGARDING DEBARMENT
LOWER TIER COVERED TRANSACTIONS

Project No.: 0606-088-653 & 0606-088-622

1) The prospective lower tier participant certifies, by submission of this proposal, that neither it nor its principals is presently debarred, suspended, proposed for debarment, declared ineligible, or voluntarily excluded from participation in this transaction by any Federal department or agency.

2) Where the prospective lower tier participant is unable to certify to any of the statements in this certification, such prospective participant shall attach an explanation to this proposal.

The undersigned makes the foregoing statements to be filed with the proposal submitted on behalf of the Offeror for contracts to be let by the Commonwealth Transportation Board.

Elizabeth Quinn	August 15, 2016	President
Signature	Date	Title

Quinn Consulting Services, Inc.
Name of Firm

ATTACHMENT 11.8.6(b)
CERTIFICATION REGARDING DEBARMENT
LOWER TIER COVERED TRANSACTIONS

Project No.: 0606-088-653 & 0606-088-622

1) The prospective lower tier participant certifies, by submission of this proposal, that neither it nor its principals is presently debarred, suspended, proposed for debarment, declared ineligible, or voluntarily excluded from participation in this transaction by any Federal department or agency.

2) Where the prospective lower tier participant is unable to certify to any of the statements in this certification, such prospective participant shall attach an explanation to this proposal.

The undersigned makes the foregoing statements to be filed with the proposal submitted on behalf of the Offeror for contracts to be let by the Commonwealth Transportation Board.

Leanette Dablock 8/15/16 Treasurer

Signature Date Title

Diversified Property Services, Inc.

Name of Firm

ATTACHMENT 11.8.6(b)
CERTIFICATION REGARDING DEBARMENT
LOWER TIER COVERED TRANSACTIONS

Project No.: 0606-088-653 & 0606-088-622

1) The prospective lower tier participant certifies, by submission of this proposal, that neither it nor its principals is presently debarred, suspended, proposed for debarment, declared ineligible, or voluntarily excluded from participation in this transaction by any Federal department or agency.

2) Where the prospective lower tier participant is unable to certify to any of the statements in this certification, such prospective participant shall attach an explanation to this proposal.

The undersigned makes the foregoing statements to be filed with the proposal submitted on behalf of the Offeror for contracts to be let by the Commonwealth Transportation Board.

[signature]	8-15-16	Settlement Officer
Signature	Date	Title

Old Dominion Settlements, Inc. T/A Key Title
Name of Firm

Copy 1 of 7 Copies - ORIGINAL

Response to Request for Proposals

ROUTE 606 BRIDGE REPLACEMENT OVER I-95 WITH 606 IMPROVEMENTS

Spotsylvania County, Virginia

State Project Nos.:	Route 606 Roadway Improvements (0606-088-653, C501), UPC 105463
	Route 606 Bridge Replacement (0606-088-622, C501, B634), UPC 100829
Federal Project Nos.:	Route 606 Roadway Improvements (STP-5111(272))
	Route 606 Bridge Replacement (BR-5111(237))
Contract ID Number:	C00105463DB89

VOLUME II: CONCEPTUAL ROADWAY PLANS

Submitted By:

SHIRLEY CONTRACTING COMPANY, LLC

In Association With:

Dewberry®

4.3.1 & 4.3.2 - Conceptual Roadway & Structural Plans

PROJECT MANAGER
SURVEYED BY, DATE
DESIGN BY Dewberry Consultants,LLC - (703) 289-4796
SUBSURFACE UTILITY BY, DATE

TYPICAL SECTIONS

REVISED	STATE	STATE ROUTE	STATE PROJECT	SHEET NO.
	VA.	606	(NFO)0606-088-653 C-501 0606-088-622 C-501, B-634	2A(1)

DESIGN FEATURES RELATING TO CONSTRUCTION OR TO REGULATION AND CONTROL OF TRAFFIC MAY BE SUBJECT TO CHANGE AS DEEMED NECESSARY BY THE DEPARTMENT

SHIRLEY CONTRACTING COMPANY, LLC

Dewberry

ROUTE 606 - 35 MPH DESIGN SPEED
URBAN COLLECTOR (GS-7)

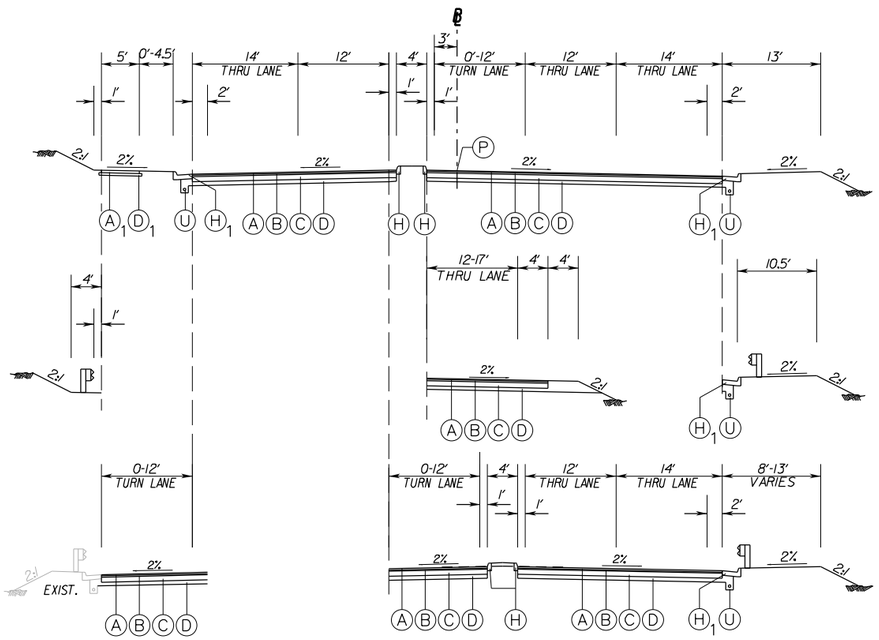

MALLARD ROAD - 30 MPH DESIGN SPEED
URBAN LOCAL (GS-8)

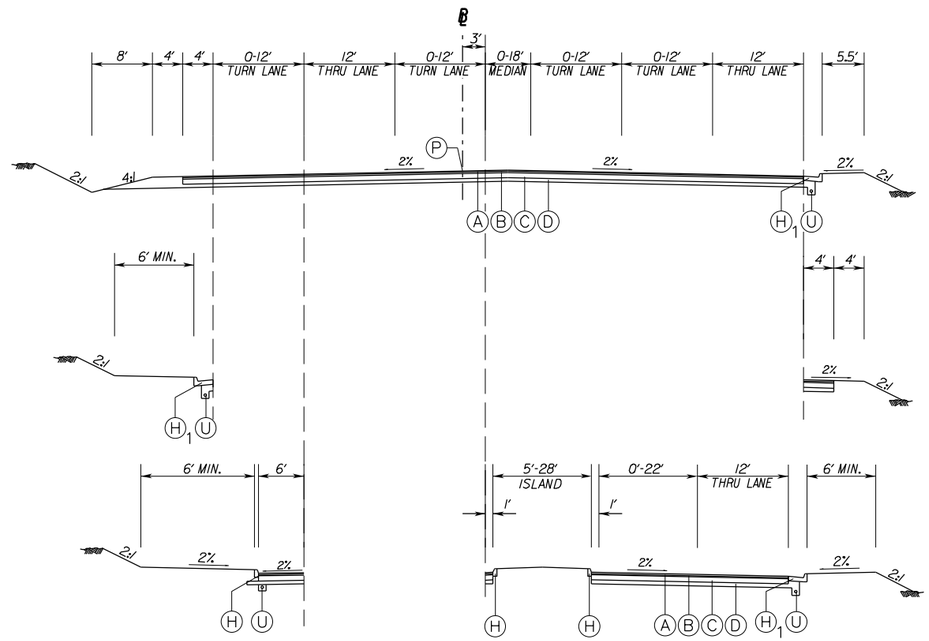

I-95 RAMPS
INTERCHANGE RAMP (GS-R)

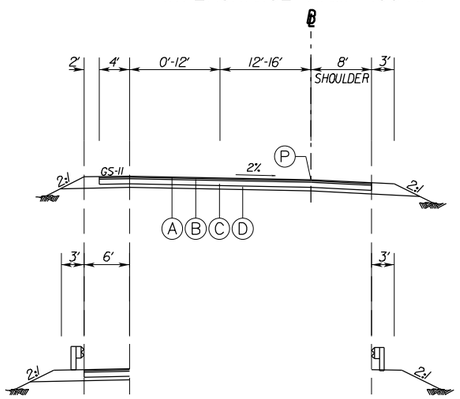

LEGEND

- (A) Asphalt Concrete, Type SM-12.5D @ 220 lbs/sy
- (A)1 4" Hydraulic Cement Concrete, Class A3
- (B) Asphalt Concrete, Type IM-19.0D @ 220 lbs/sy
- (C) 8" Asphalt Concrete, Type BM-25.0A
- (D) 6" Aggregate Base Material, Type I, Size No. 21B Connected to a Standard UD-4 Edge Drain Beneath the Curb or Curb and Gutter.
- (D)1 4" Aggregate Base Material, Type I, Size No. 21B
- (H) Curb, St'd. CG-2
- (H)1 Curb and Gutter, St'd. CG-6
- (M) Mill Existing Pavement, 1.5"
- (P) Profile Grade Line
- (U) Underdrain, St'd. UD-4

PROJECT	SHEET NO.
0606-088-653 0606-088-622	2A(1)

PROJECT MANAGER
SURVEYED BY, DATE
DESIGN BY Dewberry Consultants,LLC - (703) 289-4796
SUBSURFACE UTILITY BY, DATE

REVISED	STATE	STATE ROUTE	STATE PROJECT	SHEET NO.
	VA.	606	(NFO)0606-088-653 C-501 0606-088-622 C-501, B-634	3

DESIGN FEATURES RELATING TO CONSTRUCTION OR TO REGULATION AND CONTROL OF TRAFFIC MAY BE SUBJECT TO CHANGE AS DEEMED NECESSARY BY THE DEPARTMENT

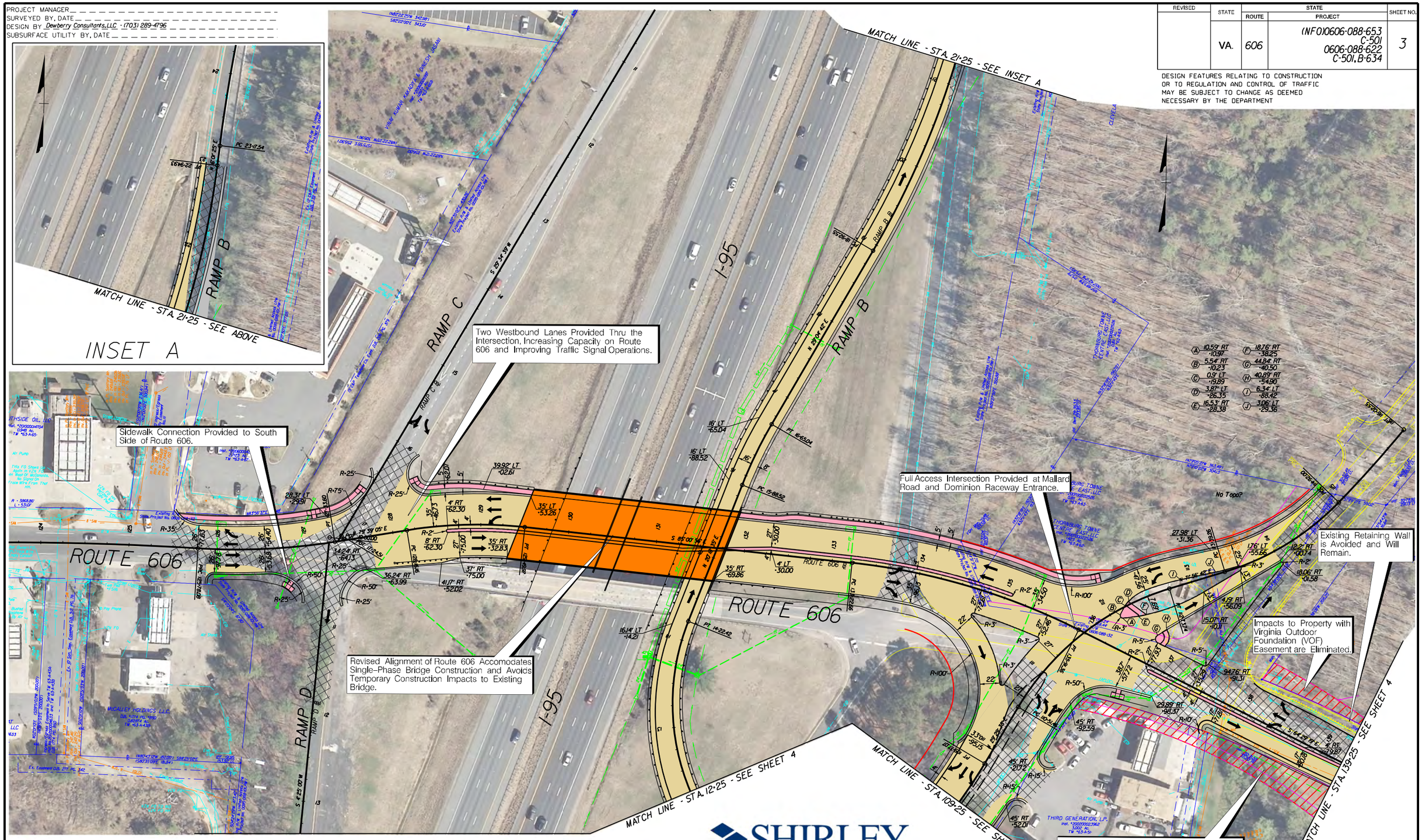

Denotes Existing Pavement
Denotes Milling and Overlay/Build-Up
Denotes Full Depth Pavement
Denotes Area of ROW or Easement Reduction
Denotes Proposed Bridge
Denotes Proposed Sidewalk
Denotes Proposed Median/ Buffer/Planted Area

Note: Dot - dot - dashed lines denote Temporary Easements.
Dot - dashed lines denote Permanent Easements or Utility Easements.

C _ Denotes Construction Limits In Cuts
F _ Denotes Construction Limits In Fills

SHIRLEY CONTRACTING COMPANY, LLC
Dewberry

SCALE 0 50' 100'

PROJECT	SHEET NO.
0606-088-653 0606-088-622	3

PROJECT MANAGER
SURVEYED BY, DATE
DESIGN BY Dewberry Consultants,LLC - (703) 289-4796
SUBSURFACE UTILITY BY, DATE

SHIRLEY CONTRACTING COMPANY, LLC

Dewberry

REVISED	STATE	STATE ROUTE	STATE PROJECT	SHEET NO.
	VA.	606	(NFO)0606-088-653 C-501 0606-088-622 C-501, B-634	4

DESIGN FEATURES RELATING TO CONSTRUCTION OR TO REGULATION AND CONTROL OF TRAFFIC MAY BE SUBJECT TO CHANGE AS DEEMED NECESSARY BY THE DEPARTMENT

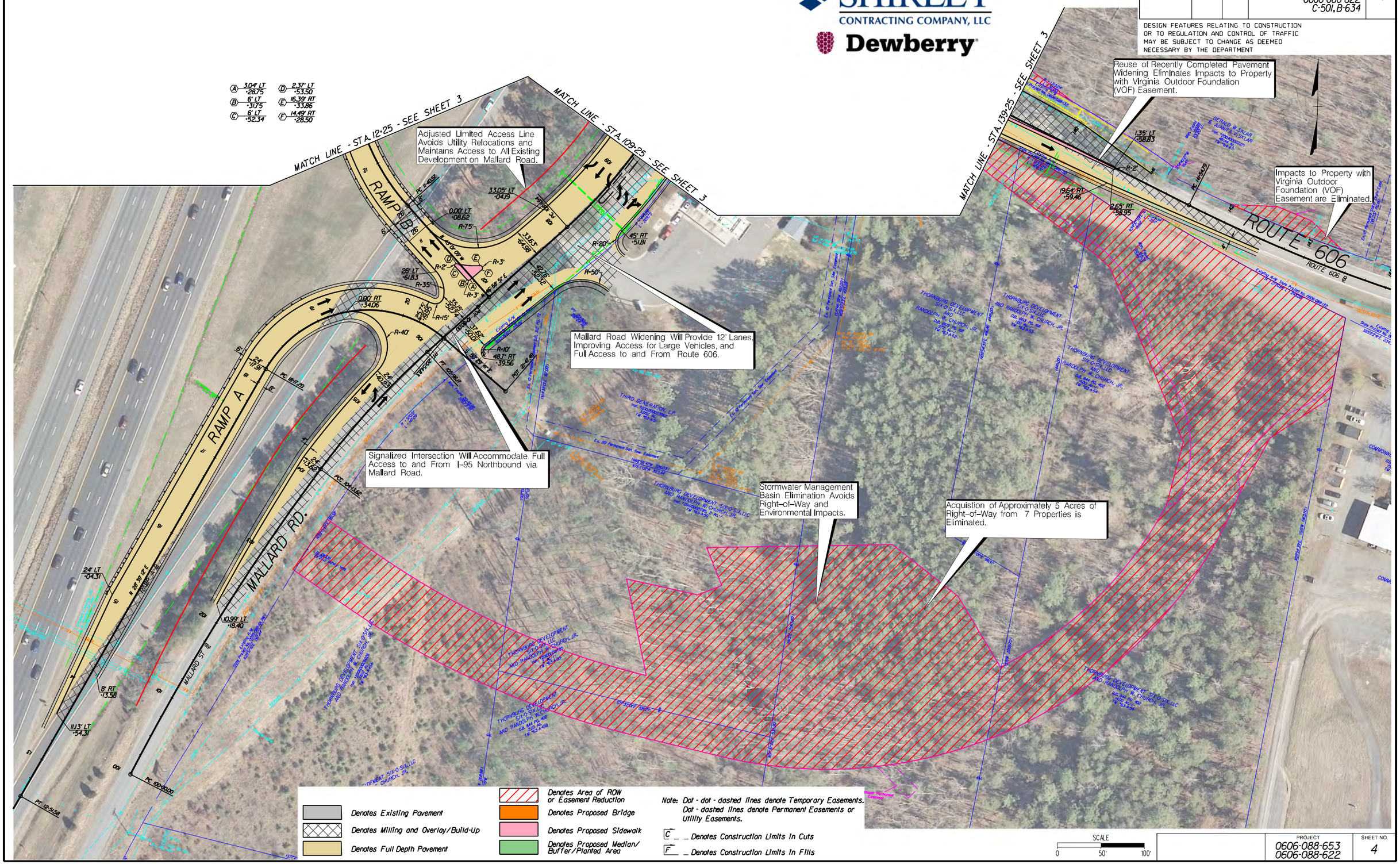

PROJECT	SHEET NO.
0606-088-653 0606-088-622	4

STATE	FEDERAL AID ROUTE	FEDERAL AID PROJECT	STATE ROUTE	STATE PROJECT	SHEET NO.
VA.	—	BR-5111(237)	606	0606-088-622, B634	1
NBIS Number: 000000000029885			UPC No. 100829		
Federal Oversight Code: NFO			FHWA Construction and Scour Code: X281-SN		

DESIGN EXCEPTION(S):

None

GENERAL NOTES:

Widths: 6'-0" sidewalk, 41'-0" and varies roadway, 4'-0" median, 29'-0" and varies roadway. Overall width 80'-0" face-to-face of rails.

Span layout: 98'-0" - 131'-0" prestressed concrete 77" deep bulb-T beam spans continuous for live load.

Capacity: HL-93 loading.

Specifications:

Construction: Virginia Department of Transportation Road and Bridge Specifications, 2016.

Design: AASHTO LRFD Bridge Design Specifications, 7th Edition, 2014; and VDOT Modifications.

Standards: Virginia Department of Transportation Road and Bridge Standards, 2008.

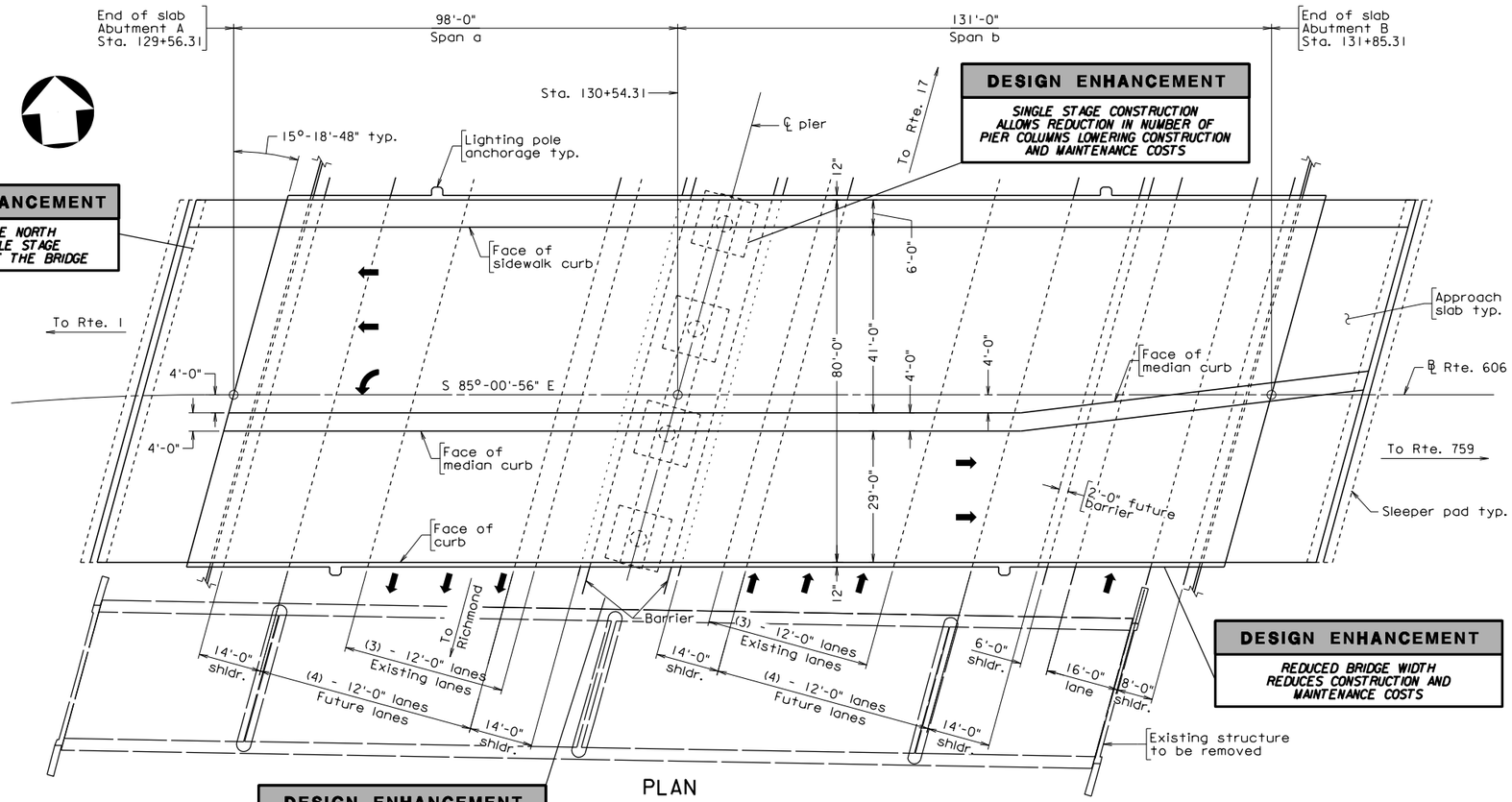

PLAN

DESIGN ENHANCEMENT
INCREASED DISTANCE BETWEEN NEW AND EXISTING PIER MINIMIZING IMPACT TO EXISTING DURING CONSTRUCTION

DESIGN ENHANCEMENT
SHORTER BRIDGE LENGTH REDUCES OVERALL BRIDGE CONSTRUCTION AND MAINTENANCE COSTS

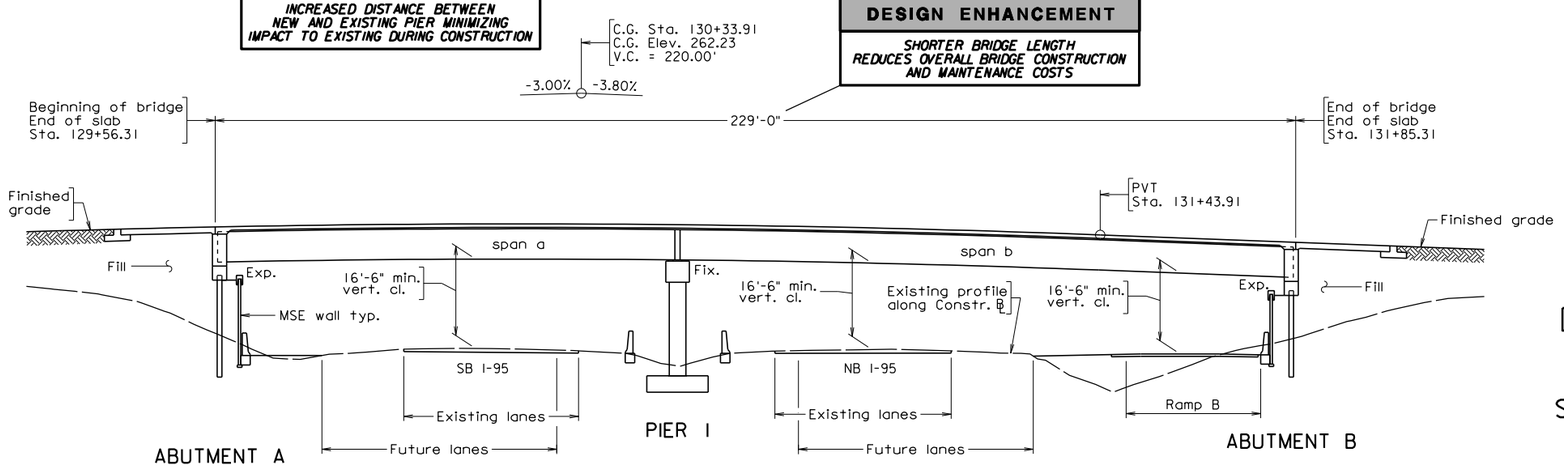

DEVELOPED SECTION ALONG ℄

Notes:

Architectural treatment shall be provided in accordance with RFP.

Low permeability concrete shall be used, additionally, low cracking concrete shall be used for bridge decks, median, sidewalk and parapets.

Corrosion resistant reinforcing steel shall be utilized in accordance with IIM-S&B-B1.

Lighting and conduit shall be provided in accordance with RFP.

PRELIMINARY PLANS
THESE PLANS NOT TO BE USED FOR CONSTRUCTION

Scale: 1/16" = 1'-0"

No.	Description	Date

REVISIONS

For Table of Revisions, see Sheet 2.

SHIRLEY CONTRACTING COMPANY, LLC

Dewberry

VDOT

COMMONWEALTH OF VIRGINIA

DEPARTMENT OF TRANSPORTATION

PROPOSED BRIDGE ON
RTE. 606 (MUDD TAVERN ROAD) OVER I-95
SPOTSLYVANIA CO. - 0.60 MI. E. OF RTE. 1
PROJ. 0606-088-622, B634

Recommended for Approval: _____ Shirley Contracting Company, LLC — Date

Approved: _____ Chief Engineer — Date

Date: September 2016

296-59

© 2016, Commonwealth of Virginia

Sheet 1 of 2

RECOMMENDED FOR APPROVAL FOR CONSTRUCTION

VDOT PROJECT MANAGER

DISTRICT CONSTRUCTION MANAGER

Dewberry Consultants LLC
Fairfax, VA
STRUCTURAL ENGINEER

PLANS BY:	Dewberry Consultants LLC
COORDINATED:	
SUPERVISED:	James D. Davidson
DESIGNED:	Daniel Cazenas
DRAWN:	John P. Doulis
CHECKED:	James D. Davidson

29659001_report.dgn

STATE	FEDERAL AID ROUTE	FEDERAL AID PROJECT	STATE ROUTE	STATE PROJECT	SHEET NO.
VA.	—	—	606	0606-088-622, B634	

Notes:

Light poles, anchorages and conduit system shall be provided in accordance with RFP.

Architectural treatment shall be provided in accordance with RFP.

Utility attachment for single 4 inch conduit shall be provided in accordance with RFP.

Steel railing shall be galvanized.

Pedestrian fence shall be black vinyl coated.

DESIGN ENHANCEMENT
REDUCED BRIDGE WIDTH REDUCES CONSTRUCTION AND MAINTENANCE COSTS

DESIGN ENHANCEMENT
ELIMINATE SOUTH SIDEWALK REDUCES NUMBER OF GIRDERS AND CONSTRUCTION AND MAINTENANCE COSTS

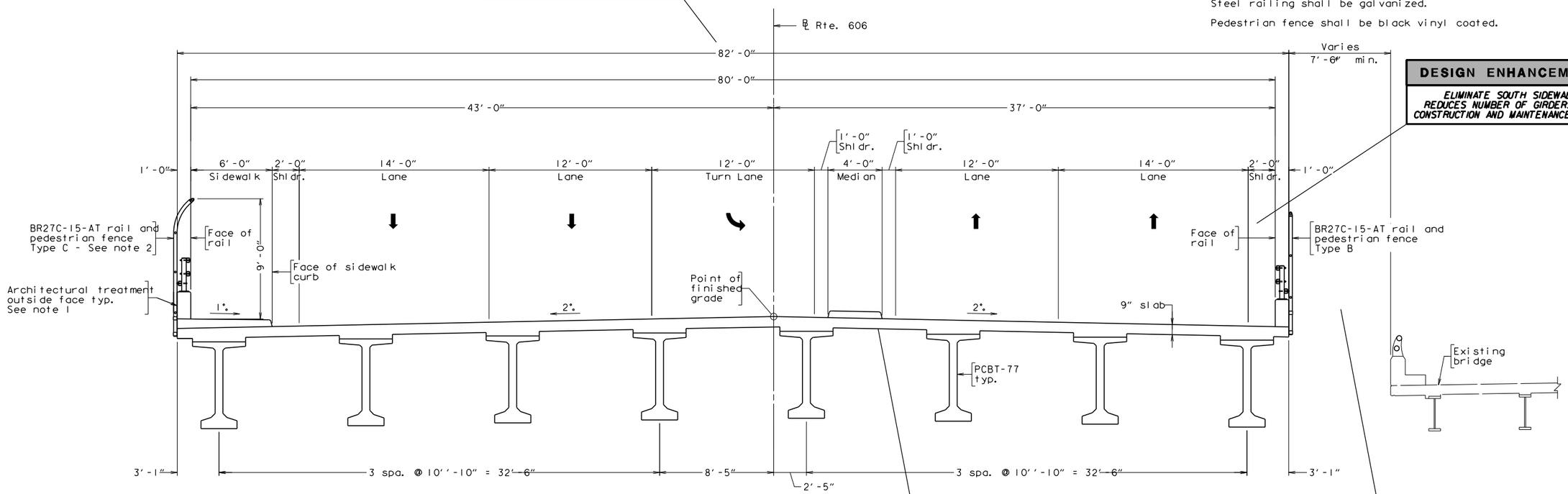

TRANSVERSE SECTION

DESIGN ENHANCEMENT
ELIMINATE LONGITUDINAL JOINT REDUCES NUMBER OF GIRDERS AND LOWERS MAINTENANCE COSTS

DESIGN ENHANCEMENT
MOVED BRIDGE NORTH ALLOWING SINGLE STAGE CONSTRUCTION OF THE BRIDGE

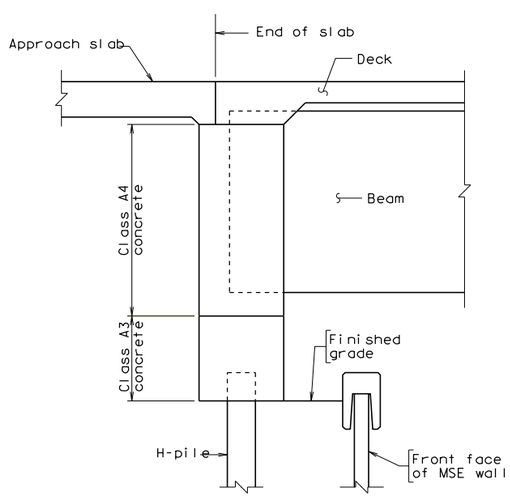

ABUTMENT SECTION
Scale: 3/8" = 1'-0"

PRELIMINARY PLANS
THESE PLANS NOT TO BE USED FOR CONSTRUCTION

Scale: 1/4" = 1'-0", unless otherwise noted

©2016, Commonwealth of Virginia

No.	Description	Date
	Revisions	

COMMONWEALTH OF VIRGINIA
DEPARTMENT OF TRANSPORTATION
STRUCTURE AND BRIDGE DIVISION

TRANSVERSE SECTION

Designed: DSC	Date	Plan No.	Sheet No.
Drawn: JPD			
Checked: JPD	Sept. 2016	296-59	2 of 2

Dewberry Consultants LLC
Fairfax, Virginia
STRUCTURAL ENGINEER

29659002 report.dgn

4.7.1 - Proposal Schedule

Activity ID	Activity Name	Original	Total	Start	Finish
Route 606 Bridge Replacement Over I-95 With 606 Improve		743	0	10-12-16	09-18-19
GENERAL / PROJECT MILESTONES		743	0	10-12-16	09-18-19
MS1000	NOTICE OF INTENT TO AWARD	0	0	10-12-16*	
MS1020	PROVIDE INSURANCE and PAYMENT and PERFORMANCE BONDS	5	37	10-12-16	10-18-16
MS1040	D/B CONTRACT EXECUTION	0	0	12-14-16*	
MS1060	NOTICE TO PROCEED	0	0	12-16-16*	
MS1080	SCOPE VALIDATION PERIOD (120 DAYS)	120	208	12-16-16	04-14-17
MS1100	VDOT ISSUES PARTIAL NTCC (BRIDGE)	0	21	09-20-17	
MS1120	VDOT ISSUES COMPLETE NTCC	0	25	10-24-17	
MS1200	UNIQUE MILESTONE CLOSE EXISTING BRIDGE TO TRAFFIC	0	0		11-01-18*
MS1220	EARLY COMPLETION - NO EXCUSE INCENTIVE DATE (6/20/2019)	0	0		06-20-19*
MS1240	NO EXCUSE INCENTIVE DAILY RATE	90	0	06-21-19	09-18-19
MS1260	FINAL COMPLETION	0	0		09-18-19*
PHASE 1 - PRE-CONSTRUCTION		659	84	10-12-16	05-20-19
DESIGN PHASE		252	92	10-12-16	10-10-17
PRELIMINARY DESIGN		137	56	12-16-16	06-29-17
PD1000	NOTIFICATION OF LANDOWNERS/BOND	15	18	12-16-16	12-30-16
PD1020	SUPPLEMENTAL BASE MAPPING/FIELD SURVEY	35	12	01-02-17	02-17-17
PD1040	UTILITY DESIGNATIONS	59	80	03-18-17	05-15-17
PD1060	UTILITY TEST PITS	45	80	05-16-17	06-29-17
PD1100	PROVIDE PROP LIMITED ACCESS CHANGES TO VDOT	15	12	04-13-17	05-03-17
PD1110	VDOT REVIEW LIMITED ACCESS CHANGES WITH CTB	21	12	05-04-17	06-02-17
PD1120	CTB PROVIDE APPROVAL OF LINE LOCATION	1	0	06-21-17	06-21-17*
PD1500	PREPARE/SUBMIT PRELIMINARY CPM SCHEDULE	15	143	12-16-16	01-09-17
PD1520	VDOT REVIEW/APPROVE PRELIMINARY CPM SCHEDULE	21	143	01-10-17	02-07-17
PD1600	PREPARE/SUBMIT BASELINE CPM SCHEDULE	90	167	12-16-16	03-15-17
PD1620	VDOT REVIEW/APPROVE BASELINE CPM SCHEDULE	21	167	03-16-17	04-05-17
RIGHT OF WAY PLANS		148	20	12-16-16	07-18-17
DES-2001	Prepare ROW/MOT Plans (1st Submission)	30	9	12-16-16	01-30-17
DES-2010	Design QA/QC Review (1st Submission)	10	9	01-31-17	02-13-17
DES-2020	Submit 1st Submission Plans	0	9	02-14-17	
DES-2030	VDOT Review / Comment (1st Submission)	21	13	02-14-17	03-06-17
DES-2040	Prepare ROW/MOT Plans (2nd Submission)	40	9	03-07-17	05-01-17
DES-2050	Design QA/QC Review (2nd Submission)	10	9	05-02-17	05-15-17
DES-2060	Submit 2nd Submission Plans	0	9		05-15-17
DES-2070	VDOT Review / Comment (2nd Submission)	21	25	05-16-17	06-05-17
DES-2080	Prepare ROW/MOT Plans FINAL	10	19	06-06-17	06-19-17
DES-2090	Design QA/QC Review	5	19	06-20-17	06-26-17
DES-2100	Submit Final Plans	0	19	06-27-17	06-27-17
DES-2110	VDOT Review / Approve Final Plans	21	28	06-27-17	07-18-17
DES-2120	ROW / MOT Plans Approved	0	20		07-18-17
GEOTECHNICAL INVESTIGATION AND REPORT		192	21	12-16-16	09-18-17
GT1000	PREPARE / SUBMIT SOIL BORING LOCATION PLAN	20	0	12-16-16	01-16-17
GT1010	REVIEW / APPROVE SOIL BORING LOCATION PLAN (INTERNAL ONLY)	5	0	01-17-17	01-23-17
GT1015	SURVEY LAYOUT SOIL BORING LOCATIONS	5	0	01-24-17	01-30-17
GT1020	GEOTECHNICAL FIELD INVESTIGATION	45	0	01-31-17	04-03-17
GT1030	LAB SAMPLING AND FIELD DATA COMPILATION	40	0	04-04-17	05-30-17
GT1040	PREPARE / SUBMIT BRIDGE GEOTECHNICAL ENGR REPORT (GER)	20	0	05-02-17	05-30-17
GT1050	PREPARE / SUBMIT ROADWAY GER	15	20	05-31-17	06-20-17
GT1070	REVIEW / APPROVE BRIDGE GER (90 DAY REVIEW for D/B PROJECT	90	0	05-31-17	08-28-17
GT1080	REVIEW / APPROVE ROADWAY GER (90 day REVIEW for D/B Projects)	90	29	06-21-17	09-18-17
ROADWAY DESIGN		252	21	10-12-16	10-10-17
RD2000	PREPARE ROADWAY PLANS/ H & HA (1ST SUBMISSION)	60	18	01-21-17	03-21-17
RD2040	SUBMIT ROADWAY PLANS/ H & HA (1ST SUBMISSION)	1	18	03-22-17	03-22-17
RD2060	VDOT/FHWA REVIEW/COMMENT ROADWAY PLANS (1ST SUBMISSIC	21	18	03-23-17	04-12-17
RD2080	PREPARE ROADWAY PLANS (2ND SUBMISSION)	50	86	04-13-17	06-01-17
RD2120	SUBMIT ROADWAY PLANS (2ND SUBMISSION)	1	86	06-02-17	06-02-17
RD2140	VDOT/FHWA REVIEW/COMMENT ROADWAY PLANS (2ND SUBMISSIC	21	86	06-03-17	06-23-17
RD2160	PREPARE FINAL ROADWAY PLANS	30	80	06-30-17	07-29-17
RD2200	SUBMIT FINAL ROADWAY PLANS	1	29	09-19-17	09-19-17
RD2220	VDOT/FHWA REVIEW/COMMENT FINAL ROADWAY PLANS	21	29	09-20-17	10-10-17
RD2240	FINAL ROADWAY PLANS APPROVED	0	29		10-10-17
FHWA IMR		234	3	10-12-16	09-14-17
IMR1000	PREPARE DRAFT IMR / SCOPING TO TAYLOR IMR FOR PROJECT NE	69	3	10-12-16	01-23-17
IMR1010	SUBMIT IMR PACKAGE TO VDOT FOR REVEW	1	3	01-24-17	01-24-17
IMR1020	VDOT REVIEW IMR PACKAGE	21	3	01-25-17	02-14-17
IMR1030	REVISE IMR BASED ON COMMENTS	10	3	02-15-17	02-24-17
IMR1040	RESUBMIT IMR PACKAGE TO VDOT FOR FINAL REVIEW	1	3	02-25-17	02-25-17
IMR1050	RECEIVE VDOT PERFORM FINAL IMR REVIEW	30	3	02-26-17	03-27-17
IMR1060	VDOT PROVIDE IMR TO FHWA FOR APPROVAL	120	3	03-28-17	09-14-17
BRIDGE DESIGN		149	0	02-18-17	09-19-17
BD3010	SUBMIT PRELIMINARY DESIGN (TS&L)	15	34	02-18-17	03-04-17
BD3030	VDOT/FHWA REVIEW/COMMENT BRIDGE PRELIMINARY DESIGN	21	34	03-05-17	03-25-17
BD3050	PREPARE BRIDGE PLANS (1ST SUBMISSION)	65	34	03-26-17	05-29-17
BD3090	SUBMIT BRIDGE PLANS (1ST SUBMISSION)	1	34	05-30-17	05-30-17
BD3110	VDOT/FHWA REVIEW/COMMENT BRIDGE PLANS (1ST SUBMISSION)	21	34	05-31-17	06-20-17
BD3130	PREPARE FINAL BRIDGE PLANS	35	34	06-21-17	07-25-17
BD3170	SUBMIT FINAL BRIDGE PLAN	1	0	08-29-17	08-29-17
BD3190	VDOT/FHWA REVIEW/COMMENT BRIDGE PLANS (FINAL SUBMISSIO	21	0	08-30-17	09-19-17

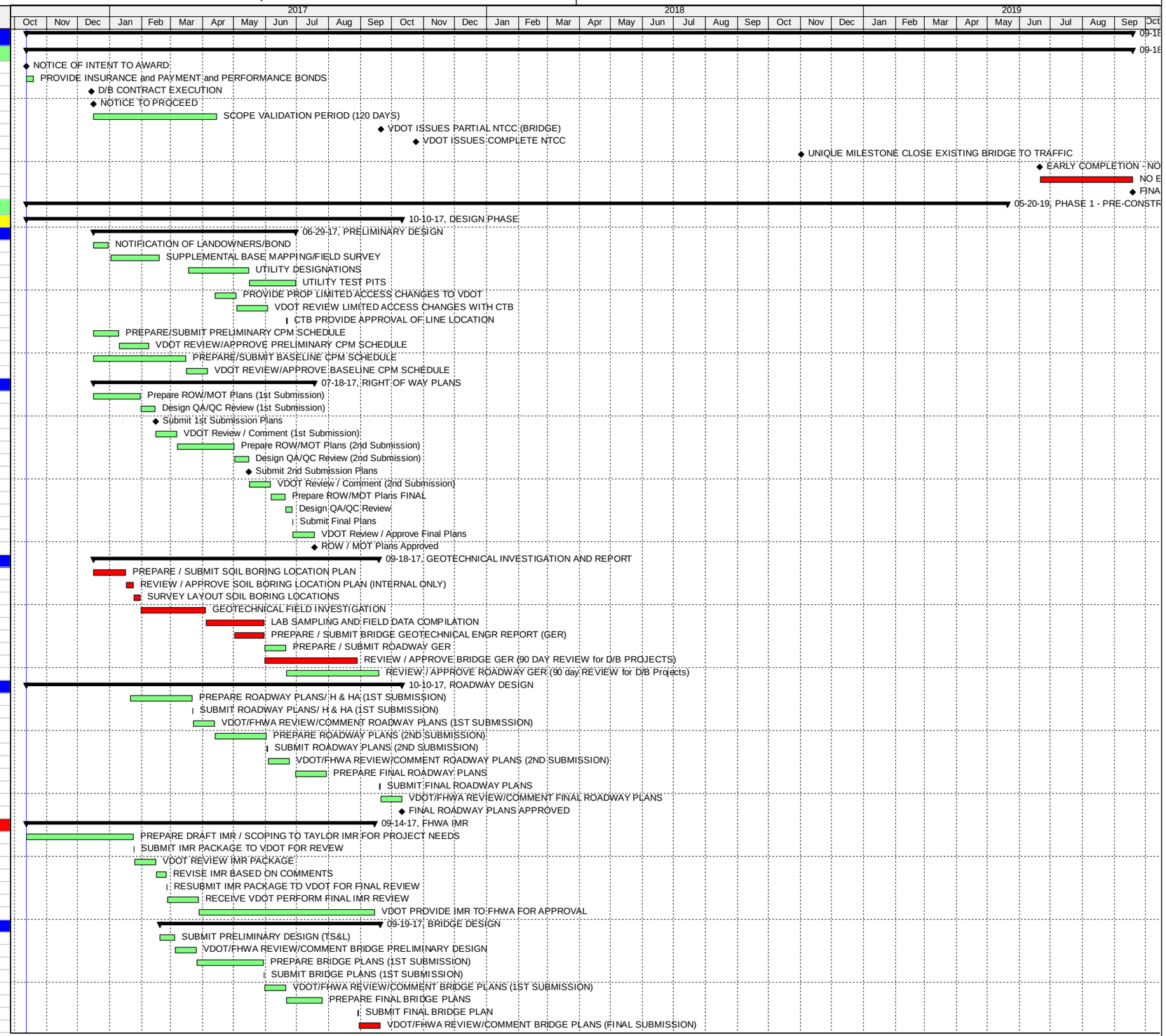

Actual Work
Remaining Work
Critical Remaining Work
Milestone
Summary

Shirley Contracting Company, LLC

Route 606 Bridge Replacement Over I-95 With 606 Improvements

4.7 Proposal Schedule

Data Date: October 12, 2016

Activity ID	Activity Name	Original	Total	Start	Finish
BD3200	FINAL BRIDGE PLANS APPROVED	0	0		09-19-17
UTILITY DESIGN (WATERLINE & SANITARY)		87	150	06-30-17	09-24-17
UD4000	PREPARE/SUBMIT UTILITY RELOCATION PLANS	30	150	06-30-17	07-29-17
UD4020	SPOTSYLVANIA COUNTY UTILITIES (SCU) REVIEW/COMMENT	21	150	07-30-17	08-19-17
UD4040	PREPARE/SUBMIT UTILITY RELOCATION PLANS - FINAL	15	150	08-20-17	09-03-17
UD4060	SCU REVIEW/APPROVE RELOCATION PLANS - FINAL	21	150	09-04-17	09-24-17
RIGHT OF WAY ACQUISITION/EASEMENTS		281	363	03-07-17	04-12-18
ROW1000	Phase 1 Environmental Site Accessment - ROW	30	131	03-07-17	04-05-17
ROW1010	Provide 30 Day Notice of Citizens Information Meeting	30	18	05-16-17	06-14-17
ROW1020	Hold Public Information Meeting	1	12	06-15-17	06-15-17
ROW1030	30 Day Wait Period - Community Comments	30	12	06-16-17	07-27-17
ROW1070	Prepare ROW Acquisition & Procedures Plan	35	13	05-16-17	07-05-17
ROW1080	VDOT Review /Approves ROW Acquisition & Relocation Plan (Hold Point)	21	19	07-06-17	07-26-17
ROW1090	VDOT Provides Notice to Commence ROW Acquisition (Hold Point)	0	12		07-27-17
ROW1100	ROW Acquisition Complete	0	363		04-12-18
ACQUISITION PROCESS		231	67	05-16-17	04-12-18
ROW2010	Complete 60 Yr Title Exam	30	9	05-16-17	06-26-17
ROW2020	Complete Appraisal	40	9	05-16-17	07-11-17
ROW2030	Review Appraiser Completes Review	15	9	07-12-17	08-01-17
ROW2040	Submit Appraisal to VDOT (RUMS)	2	9	08-02-17	08-03-17
ROW2050	VDOT Approves Appraisal	21	13	08-04-17	08-24-17
ROW2060	Prepare Offer Package	5	19	08-04-17	08-10-17
ROW2070	Negotiator Make Initial Contact / Present Offer	10	9	08-25-17	09-07-17
ROW2080	Negotiations	40	9	09-08-17	11-02-17
ROW2090	Send Notice of Filing Certif. to Property Owner	3	102	11-03-17	11-07-17
ROW2100	Prepare / Finalize Plat	4	15	11-03-17	11-08-17
ROW2110	Prepare Certificate Package	5	100	11-03-17	11-09-17
ROW2120	Submit Certificate Package to VDOT	0	100	11-10-17	
ROW2130	VDOT Reviews / Issues Certificate & Check	21	142	11-10-17	11-30-17
ROW2140	Design Builder Files Certificate @ Court house	2	100	12-01-17	12-04-17
ROW2150	Obtain Signed Option	5	9	11-03-17	11-09-17
ROW2160	Option / Settlement Docs Submitted to VDOT	5	9	11-10-17	11-16-17
ROW2170	VDOT Reviews Settlement Documents	21	13	11-17-17	12-07-17
ROW2180	Settlement Documents to Settlement Attorney	2	9	12-08-17	12-11-17
ROW2190	Obtain release of Liens	60	9	12-12-17	03-07-18
ROW2200	Notice to VDOT that all Liens Are Cleared	1	9	03-08-18	03-08-18
ROW2210	VDOT Issues Settlement Check	21	13	03-09-18	03-29-18
ROW2220	Settlement Atty. Holds Settlement / Records	10	9	03-30-18	04-12-18
ROW2230	Property Access for Construction - If By Option	0	176		11-09-17
ROW2240	Property Access for Constr. - If By Certificate	0	159		12-04-17
ROW2250	Property Access for Utilities -If By Certificate	0	100		12-04-17
ROW2260	Property Access for Utilities - If By Settlement	0	9		04-12-18
PUBLIC OUTREACH		615	84	12-16-16	05-20-19
PI1000	PROVIDE LIST OF AFFECTED STAKEHOLDERS	20	184	12-16-16	01-04-17
PI1020	PROVIDE EMERGENCY CONTACT LIST	20	977	12-16-16	01-04-17
PUBLIC INVOLVEMENT		482	84	06-24-17	05-20-19
PI1040	HOLD INFORMAL STAKEHOLDER UPDATE	10	160	06-24-17	07-03-17
PI1060	SPECIFIC GROUPS/ADDITIONAL MEETINGS AS NECESSARY	10	698	10-11-17	10-20-17
PI1080	PARDON OUR DUST MEETING	10	698	10-11-17	10-20-17
PI1100	STAGE 2 PARDON OUR DUST	10	311	11-02-18	11-11-18
PI1120	FINAL CONFIGURATION PARDON OUR DUST	10	84	05-07-19	05-20-19
PUBLIC AFFAIRS UPDATE		450	110	07-05-17	04-12-19
P1140	MONTHLY UPDATE	450	110	07-05-17	04-12-19
UTILITY RELOCATIONS		294	9	06-30-17	08-27-18
UR100	HOLD UFI MEETING WITH UTILITY OWNER	1	208	06-30-17	06-30-17
POWER DISTRIBUTION		285	9	07-01-17	08-15-18
UR1000	RAPPAHANNOCK ELECTRIC SUBMITS PE ESTIMATE	60	250	07-01-17	08-29-17
UR1020	REVIEW/APPROVE PE ESTIMATE	5	250	08-30-17	09-03-17
UR1040	RAPPAHANNOCK ELECTRIC COMPLETES UTILITY DESIGN	0	250		09-03-17
UR1060	APPROVE UTILITY DESIGN	30	250	09-04-17	10-03-17
UR1080	EASEMENT INSTRUMENTS ACQUIRED	15	59	04-13-18	04-27-18
UR1090	UTILITY BEGINS RELOCATIONS	30	40	04-30-18	06-11-18
UR1100	RAPPAHANNOCK RELOCATES ALONG MALLARD RD STA. 113 TO 115	15	9	07-26-18	08-15-18
SANITARY SEWER		255	47	07-03-17	07-03-18
UR2000	SCU RESEARCH EASEMENTS AND PRIOR RIGHTS	20	142	07-03-17	07-31-17
UR2020	GENERATE COST PROPOSAL	20	104	09-25-17	10-20-17
UR2040	SCU REVIEW & COMMENT ON PROPOSAL FOR APPROVAL	10	104	10-23-17	11-03-17
UR2060	SCU SIGN PRICING AGREEMENT	15	104	11-06-17	11-28-17
UR2080	EASEMENT INSTRUMENTS ACQUIRED	5	9	04-13-18	04-19-18
UR2100	BEGIN SANITARY RELOCATIONS	30	9	04-20-18	06-01-18
UR2120	RELOCATE SANITARY SEWER MALLARD RD STA 114+00 TO 114+50	12	9	06-04-18	06-19-18
UR2140	RELOCATE SANITARY SEWER MALLARD RD STA 106+50	10	47	06-20-18	07-03-18
WATER DISTRIBUTION		293	9	07-03-17	08-27-18
UR3000	SCU RESEARCH EASEMENTS AND PRIOR RIGHTS	20	159	07-03-17	07-31-17
UR3020	GENERATE COST PROPOSAL	20	121	09-25-17	10-20-17
UR3040	SCU REVIEW & COMMENT ON PROPOSAL FOR APPROVAL	10	121	10-23-17	11-03-17
UR3060	SCU SIGN PRICING AGREEMENT	15	121	11-06-17	11-28-17
UR3080	EASEMENT INSTRUMENTS ACQUIRED	5	21	04-13-18	04-19-18
UR3100	BEGIN W/L RELOCATIONS	30	21	04-20-18	06-01-18
UR3120	RELOCATE W/L ALONG MALLARD RD STA. 111+50 TO 114+50	25	9	06-20-18	07-25-18

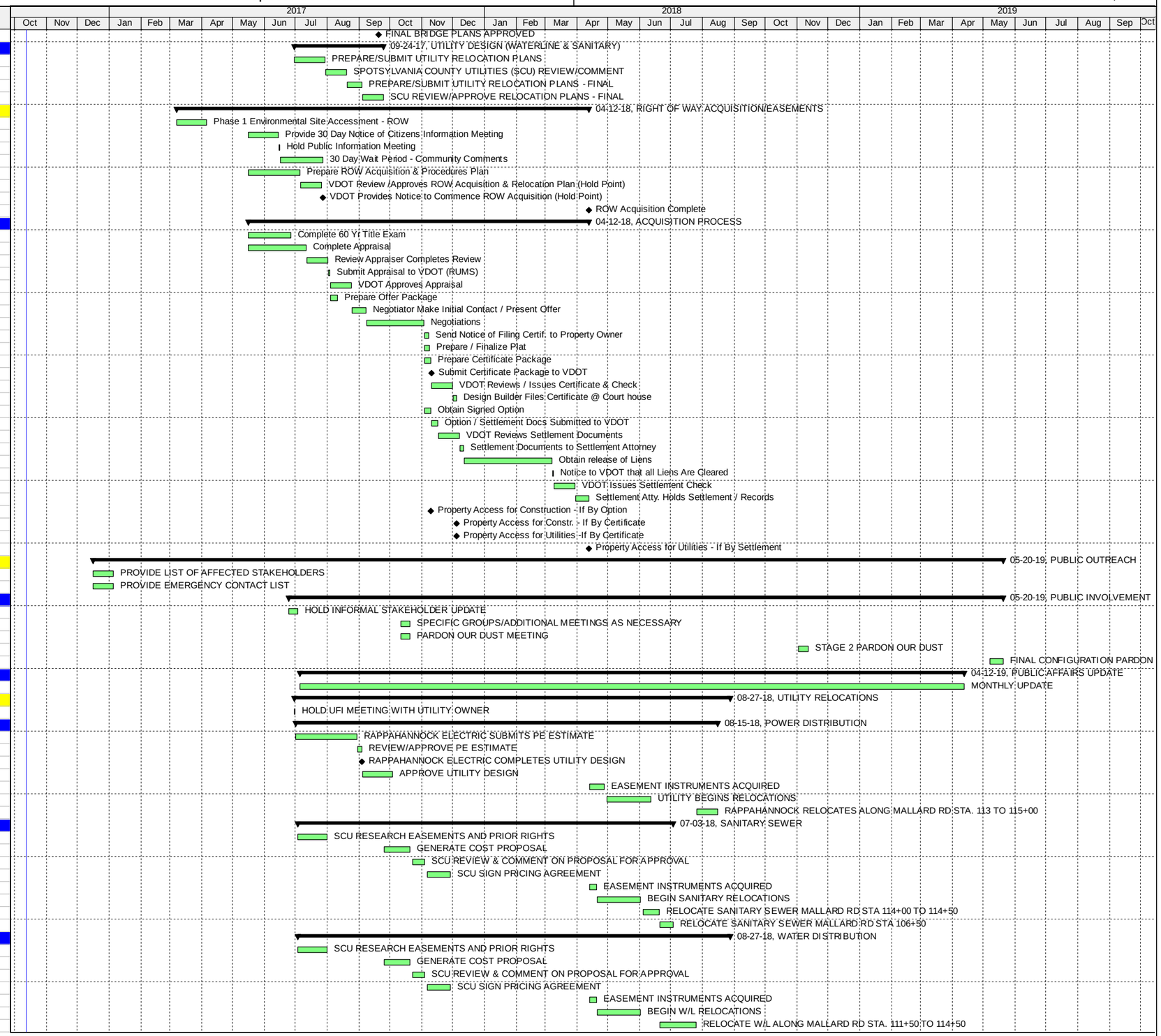

Actual Work
Remaining Work
Critical Remaining Work
Milestone
Summary

Shirley Contracting Company, LLC

Activity ID	Activity Name	Original	Total	Start	Finish
UR3140	RELOCATE HYDRANT RT 606 STA. 137+00	7	9	07-26-18	08-03-18
UR3160	RELOCATE W/L SERVICE (MALLARD RD STA. 110+00)	4	9	08-06-18	08-09-18
UR3180	RELOCATE W/L MALLARD RD STA 108+00 TO 109+00	12	9	08-10-18	08-27-18
SUMMIT IG - VDOT COMMUNICATIONS		253	49	07-01-17	06-29-18
UR4000	SUMMIT IG SUBMITS PE ESTIMATE	60	264	07-01-17	08-29-17
UR4020	REVIEW/APPROVE PE ESTIMATE	5	264	08-30-17	09-03-17
UR4040	SUBMIT IG COMPLETES UTILITY DESIGN	0	264		09-03-17
UR4060	APPROVE UTILITY DESIGN	30	264	09-04-17	10-03-17
UR4080	EASEMENT INSTRUMENTS ACQUIRED	15	73	04-13-18	04-27-18
UR4090	UTILITY BEGINS RELOCATIONS	30	49	04-30-18	06-11-18
UR4100	SUMMIT RELOCATES ALONG RT 606 STA. 134+00 TO 141+00	14	49	06-12-18	06-29-18
COMCAST - COMMUNICATIONS		275	27	07-01-17	08-01-18
UR5000	COMCAST SUBMITS PE ESTIMATE	60	231	07-01-17	08-29-17
UR5020	REVIEW/APPROVE PE ESTIMATE	5	231	08-30-17	09-03-17
UR5040	COMCAST COMPLETES UTILITY DESIGN	0	231		09-03-17
UR5060	APPROVE UTILITY DESIGN	30	231	09-04-17	10-03-17
UR5080	EASEMENT INSTRUMENTS ACQUIRED	15	40	04-13-18	04-27-18
UR5090	COMCAST BEGINS RELOCATSION	45	27	04-30-18	07-02-18
UR5100	COMCAST RELOCATES ALONG MALLARD RD STA. 107+00 TO 111+00	21	27	07-03-18	08-01-18
VERIZON - COMMUNICATIONS		269	33	07-01-17	07-24-18
UR6000	VERIZON SUBMITS PE ESTIMATE	60	208	07-01-17	08-29-17
UR6020	REVIEW/APPROVE PE ESTIMATE	5	208	08-30-17	09-03-17
UR6040	VERIZON COMPLETES UTILITY DESIGN	0	208		09-03-17
UR6060	APPROVE UTILITY DESIGN	30	208	09-04-17	10-03-17
UR6080	EASEMENT INSTRUMENTS ACQUIRED	15	17	04-13-18	04-27-18
UR6100	VERIZON BEGINS RELOCATSION	45	11	04-30-18	07-02-18
UR6120	VERIZON RELOCATES ALONG MALLARD RD STA. 107+75 TO 109+00	15	33	07-03-18	07-24-18
ENVIRONMENTAL PERMITTING		411	278	01-03-17	08-13-18
THREATENED & ENDANGERED SPECIES		336	278	04-18-17	08-13-18
ENV2710	T&E SPECIES IDENTIFICATION AND IMPACTS COORDINATION	40	69	04-18-17*	06-13-17
ENV2720	PREPARE AND SUBMIT T&E SPECIES DOCUMENTATION WITH AHJ'S	20	69	06-14-17	07-12-17
ENV2730	SMALL WHORLED POGONIA SURVEY (If Necessary July 2018)	30	278	07-02-18*	08-13-18
LD 445 / STORMWATER PERMIT		95	37	04-13-17	08-25-17
ENV2960	COMPLETE SWPPP (LD-455E) CERTIFICATIONS	5	37	04-13-17	04-19-17
ENV2970	APP'D LAND DISTURBANCE PERMIT APPLICATION and SWPPP .for M	0	86	04-20-17	
ENV2980	LD-445 FORMS - TO BE SUBMITTED WITH 60% PLANS	20	86	04-20-17	05-17-17
ENV2985	REQUEST PERMIT COVERAGE (APPLICATION COMPLETE - HOLD PT)	0	86	05-18-17	
ENV2990	AGENCY REVIEW OF LD-445 / SWPPP	21	86	05-18-17	06-16-17
ENV2995	VDOT SECURE PERMIT COVERAGE and RELEASE WORK (HOLD POI	90	37	04-20-17	08-25-17
JOINT WETLANDS and WATERS PERMITTING		207	19	01-03-17	10-23-17
ENV2780	WETLAND DELINEATIONS-SURVEYS & FLAGGING	30	18	01-03-17	02-13-17
ENV2790	COE JURISDICTIONAL DETERMINATION	40	18	02-14-17	04-10-17
ENV2810	PREPARE JOINT PERMIT APPLICATION	20	18	04-11-17	05-08-17
ENV2820	SUBMIT JOINT PERMIT APPLICATION	0	18	05-09-17	
ENV2830	AGENCY REVIEW OF JPA	140	27	05-09-17	09-25-17
ENV2840	JPA APPROVED	0	19	09-26-17	
ENV2850	PURCHASE WETLAND AND STREAM MITIGATION CREDITS	20	19	09-26-17	10-23-17
HAZARDOUS MATERIAL & SPILL PREVENTION POLLUTION PLAN		327	15	04-04-17	07-17-18
ENV5000	DEVELOP SPCC (SPILLL PREVENTION PLAN)	20	59	07-31-17	08-25-17
ENV5010	INVESTIGATE HAZARDOUS MATERIAL	20	271	04-04-17	05-01-17
ENV5020	NOTIFY VDOT OF FINDINGS	10	271	05-02-17	05-15-17
ENV5030	VDOT EVALUATE FOR CHANGED CONDITION	21	271	05-16-17	06-14-17
ENV5040	VDOT REQUEST FOR CHANGE ORDER TO REMEDIATE	10	271	06-15-17	06-28-17
ENV5050	CHANGE ORDER EXECUTED	5	271	06-29-17	07-06-17
ENV5060	VDOT ISSUES NOTICE TO PROCEED PLAN AND REMEDIATION	5	271	07-07-17	07-13-17
ENV5080	LEAD AND ASBESTOS SURVEYS AND TESTING	15	16	07-03-18	07-17-18
PHASE 2 - CONSTRUCTION		444	62	09-20-17	06-20-19
ADMINISTRATION & PIM		152	354	09-20-17	04-25-18
GB1000	QA/QC PREPARATORY INSPECTION MEETING - MOT	1	22	10-11-17	10-11-17
GB1020	QA/QC PREPARATORY INSPECTION MEETING - CLEARING/E&S	1	22	10-12-17	10-12-17
GB1040	QA/QC PREPARATORY INSPECTION MEETING - EARTHWORK	1	22	10-13-17	10-13-17
GB1060	QA/QC PREPARATORY INSPECTION MEETING - DRAINAGE & STRUC	1	231	10-16-17	10-16-17
GB1080	QA/QC PREPARATORY INSPECTION MEETING - AGGREGATE BASE	1	129	10-11-17	10-11-17
GB1100	QA/QC PREPARATORY INSPECTION MEETING - ASPHALT	1	129	10-12-17	10-12-17
GB1120	QA/QC PREPARATORY INSPECTION MEETING - STRUCTURAL CONC	1	35	10-11-17	10-11-17
GB1140	QA/QC PREPARATORY INSPECTION MEETING - REINFORCING STEEL	1	134	10-12-17	10-12-17
GB1160	QA/QC PREPARATORY INSPECTION MEETING - UNDERDRAIN	1	231	10-17-17	10-17-17
GB1170	QA/QC PREPARATORY INSPECTION MEETING - MSE WALL	5	16	02-14-18	02-20-18
GB1180	QA/QC PREPARATORY INSPECTION MEETING - CONCRETE FLATWC	1	235	10-11-17	10-11-17
GB1200	QA/QC PREPARATORY INSPECTION MEETING - BEAM ERECTION	1	0	04-25-18	04-25-18
GB1220	QA/QC PREPARATORY INSPECTION MEETING - GUARDRAIL	1	129	10-13-17	10-13-17
GB1240	QA/QC PREPARATORY INSPECTION MEETING - SIGNAGE	1	22	10-16-17	10-16-17
GB1280	QA/QC PREPARATORY INSPECTION MEETING - PAVEMENT MARKING	1	260	10-13-17	10-13-17
GB1380	PREP/SUBMIT INITIAL SUBMITTALS/SHOP DRAWINGS/C-25'S	8	469	10-11-17	10-20-17
GB1400	REVIEW/APPROVE INITIAL SUBMITTALS/SHOP DRAWINGS/C-25'S	21	677	10-21-17	11-10-17
GB1520	DESIGN MSE WALLS	20	16	09-20-17	10-17-17
GB1540	REVIEW/APPROVE MSE WALL SHOP DRAWINGS	21	16	10-18-17	11-15-17
GB1560	FABRICATE MSE WALLS	60	16	11-16-17	02-13-18
GB1620	DESIGN BRIDGE BEAMS	20	0	09-20-17	10-17-17
GB1640	REVIEW/APPROVE SHOP DRAWINGS	21	0	10-18-17	11-15-17

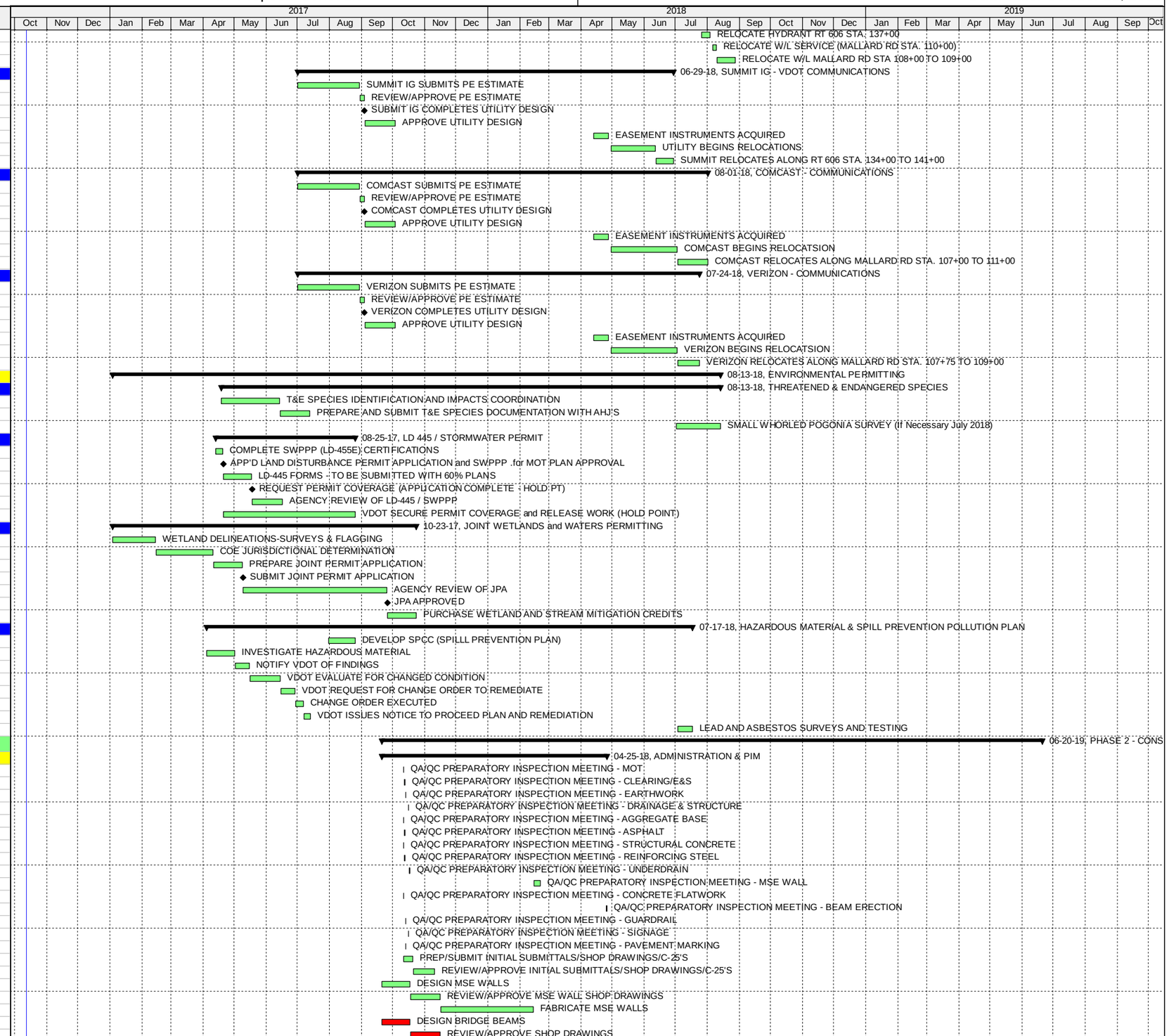

Actual Work ◆ Milestone
Remaining Work Summary
Critical Remaining Work

Shirley Contracting Company, LLC

Activity ID	Activity Name	Original	Total	Start	Finish
GB1660	FABRICATE BRIDGE BEAMS	110	0	11-16-17	04-24-18
PROJECT GENERAL ITEMS		30	21	09-20-17	10-31-17
GA1020	MOBILIZATION FOR CONSTRUCTION	15	21	09-20-17	10-10-17
GA1040	SETUP FIELD OFFICES & STAGING AREA	15	21	09-20-17	10-10-17
GA1060	INITIAL SURVEY CONTROLS	10	21	10-11-17	10-24-17
GA1080	INITIAL MOT DEVICES/CONSTRUCTION SIGNAGE	10	21	10-18-17	10-31-17
STAGE 1		255	0	11-01-17	11-01-18
606 BRIDGE OVER I-95		255	0	11-01-17	11-01-18
B100	MOBILIZE STRUCTURAL CREW TO SITE	1	21	11-01-17	11-01-17
ABUTMENTS		166	23	11-02-17	06-28-18
ABUTMENT A		160	29	11-02-17	06-20-18
B2010	SHORE / EXCAVATE FOR MSE / FOUNDATION ABUTMENT A	15	21	11-02-17	11-22-17
B2020	INSTALL ABUTMENT A FOUNDATION	15	21	11-27-17	12-15-17
B2030	CAST MSE WALL LEVELING PAD ABUTMENT A	5	16	02-21-18	02-27-18
B2040	INSTALL MSE WALL PANELS AND FILL ABUTMENT A LEVEL 1 THRU 3	15	16	02-28-18	03-20-18
B2090	CAST ABUTMENT A FOOTING / BEAM SEATS	10	16	03-21-18	04-03-18
B2100	INSTALL ABUTMENT A COPING	10	16	03-21-18	04-03-18
B2110	F/R/P/S ABUTMENT A BACKWALL	15	29	05-09-18	05-30-18
B2120	INSTALL MSE WALL A LEVELS 4 AND 5	15	29	05-31-18	06-20-18
ABUTMENT B		151	23	11-27-17	06-28-18
B2200	SHORE / EXCAVATE FOR MSE / FOUNDATION ABUTMENT B	15	21	11-27-17	12-15-17
B2230	INSTALL ABUTMENT B FOUNDATION	15	21	12-18-17	01-09-18
B2240	CAST MSE WALL LEVELING PAD ABUTMENT B	5	46	01-10-18	01-16-18
B2250	INSTALL MSE WALL PANELS AND FILL ABUTMENT B LEVEL 1 THRU 3	15	26	02-14-18	03-06-18
B2260	CAST ABUTMENT B FOOTING / BEAM SEATS	10	26	03-07-18	03-20-18
B2270	INSTALL ABUTMENT B COPING	10	26	03-07-18	03-20-18
B2280	F/R/P/S ABUTMENT A BACKWALL	15	23	05-17-18	06-07-18
B2290	INSTALL MSE WALL B LEVELS 4 AND 5	15	23	06-08-18	06-28-18
PIER CONSTRUCTION		100	21	11-02-17	03-27-18
B1000	INSTALL MOT TO PIER ACCESS	5	41	11-02-17	11-08-17
B1005	INSTALL E&S CONTROLS	5	41	11-09-17	11-15-17
B1010	EXCAVATE AND SHORE	10	21	12-18-17	01-02-18
B1020	STABILIZE FOUNDATION AREA	5	21	01-03-18	01-09-18
B1030	INSTALL PIER FOOTING	15	21	01-10-18	01-30-18
B1050	F/R/P/S PIER COLUMNS	10	21	01-31-18	02-13-18
B1060	BACKFILL PIER	5	21	02-14-18	02-20-18
B1070	INSTALL THRU-JACKS AND FALSEWORK FOR PIER CAP	10	21	02-21-18	03-06-18
B1080	R/P/S PIER CAP AND BEAM SEATS	10	21	03-07-18	03-20-18
B1090	INSTALL PIER PROTECTION	5	21	03-21-18	03-27-18
SUPERSTRUCTURE		133	0	04-26-18	11-01-18
B3000	MOBILIZE STRUCTURAL ERECTORS	3	0	04-26-18	04-30-18
B3010	ERECT BRIDGE BEAMS SPAN A	6	0	05-01-18	05-08-18
B3020	ERECT BRIDGE BEAMS SPAN B	6	0	05-09-18	05-16-18
B3030	INSTALL BRIDGE DECK OVERHANGS	15	0	05-17-18	06-07-18
B3040	INSTALL SIP DECKING	15	0	05-21-18	06-11-18
B3050	PLACE REINFORCING STEEL	15	0	06-12-18	07-02-18
B3060	MOBILIZE BIDWELL TO PROJECT	3	0	07-03-18	07-06-18
B3070	DRY RUN SCREED	3	0	07-09-18	07-11-18
B3080	CAST DECK SEG 1 (SPAN A)	8	0	07-12-18	07-23-18
B3090	CAST DECK SEG 2 (SPAN B)	8	0	07-24-18	08-02-18
B3095	INSTALL CONTINUITY DIAPHRAM / CLOSURE	15	0	08-03-18	08-23-18
B3100	CAST DECK SEG 3 (ABUT A JOINT)	8	0	08-24-18	09-04-18
B3110	CAST DECK SEG 4 (ABUT B JOINT)	8	0	09-05-18	09-14-18
B3120	CAST DECK SEG 5 (PIER 1 CLOSURE)	8	0	09-17-18	09-26-18
B3130	INSTALL PARAPETS	10	0	09-27-18	10-10-18
B3140	BR-27 / FENCING	12	0	10-11-18	10-26-18
B3150	GROOVE BRIDGE DECK	2	0	10-29-18	10-30-18
B3160	VDOT PERFORM SAFETY INSPECTION	2	0	10-31-18	11-01-18
APPROACH SLABS		83	1	06-21-18	10-17-18
B4000	SETTLEMENT PERIOD ABUTMENT A	40	29	06-21-18	08-16-18
B4020	SETTLEMENT PERIOD ABUTMENT B	40	23	06-29-18	08-24-18
B4040	INSTALL AGGREGATE BACKFILL - ABUTMENT A	5	1	09-27-18	10-03-18
B4060	INSTALL AGGREGATE BACKFILL - ABUTMENT B	5	1	09-27-18	10-03-18
B4080	F/R/P/S ABUTMENT A APPROACH SLAB	10	1	10-04-18	10-17-18
B4100	F/R/P/S ABUTMENT B APPROACH SLAB	10	1	10-04-18	10-17-18
CONSTRUCT BRIDGE TIE-IN NE QUADRANT		160	1	03-19-18	10-31-18
BT2340	INSTALL MOT ALONG EXISTING RT 606	2	19	03-19-18	03-20-18
BT2380	EROSION & SEDIMENT CONTROLS	2	19	03-21-18	03-22-18
BT2381	CLEAR & GRUB	8	19	03-23-18	04-03-18
BT2400	STRIP TOPSOIL TO STOCKPILE	3	19	04-04-18	04-06-18
BT2420	EARTHWORKS CUT/FILL	10	91	04-09-18	04-20-18
BT2440	ESTABLISH OPEN / CLOSED DRAINAGE	5	104	04-23-18	04-27-18
BT2460	GRADE SLOPES	8	104	04-30-18	05-09-18
BT2480	PLACE COMPACT BASE AGGREGATE	4	107	05-10-18	05-15-18
BT2500	UNDERDRAIN INSTALLATION	5	104	05-16-18	05-22-18
BT2520	BASE ASPHALT	5	1	10-18-18	10-24-18
BT2540	INTERMEDIATE ASPHALT	3	1	10-25-18	10-29-18
BT2560	TEMP PAVEMENT MARKINGS	2	1	10-30-18	10-31-18
CONSTRUCT BRIDGE TIE-IN NW QUADRANT		158	1	03-21-18	10-31-18
BT2820	INSTALL MOT ALONG EXISTING RT 606	2	110	03-21-18	03-22-18

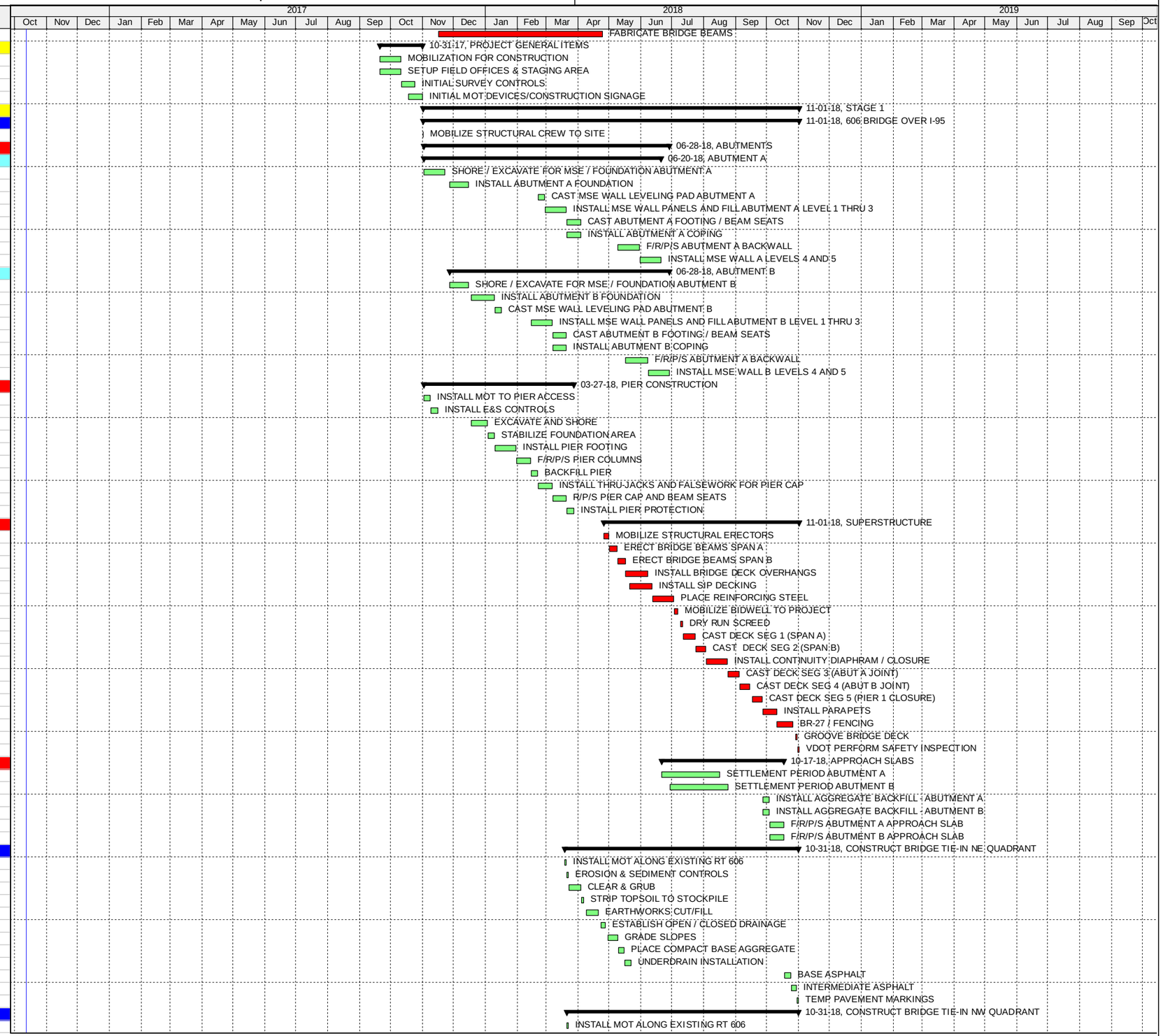

Actual Work ◆ Milestone
Remaining Work ▼▬▬▼ Summary
Critical Remaining Work

Activity ID	Activity Name	Original	Total	Start	Finish
BT2860	EROSION & SEDIMENT CONTROLS	2	110	03-23-18	03-26-18
BT2880	STRIP TOPSOIL TO STOCKPILE	3	91	04-23-18	04-25-18
BT2900	EARTHWORKS CUT/FILL	10	91	04-26-18	05-09-18
BT2920	ESTABLISH OPEN / CLOSED DRAINAGE	5	91	05-10-18	05-16-18
BT2940	GRADE SLOPES	8	91	05-17-18	05-29-18
BT2960	PLACE COMPACT BASE AGGREGATE	4	93	05-30-18	06-04-18
BT2980	UNDERDRAIN INSTALLATION	5	91	06-05-18	06-11-18
BT3000	BASE ASPHALT	5	1	10-18-18	10-24-18
BT3020	INTERMEDIATE ASPHALT	3	1	10-25-18	10-29-18
BT3040	TEMP PAVEMENT MARKINGS	2	1	10-30-18	10-31-18
NB RAMP FROM NEW BRIDGE TO EXISTING RAMP		**63**	**93**	**03-19-18**	**06-14-18**
NBR1000	INSTALL MOT ALONG EXISTING NB RAMP	2	26	03-19-18	03-20-18
NBR1020	ESTABLISH CONSTRUCTION ENTRANCE	1	26	03-21-18	03-21-18
NBR1060	EROSION & SEDIMENT CONTROLS	2	26	03-22-18	03-23-18
NBR1080	STRIP TOPSOIL TO STOCKPILE	3	19	04-04-18	04-06-18
NBR1100	EARTHWORKS CUT/FILL	10	19	04-09-18	04-20-18
NBR1120	ESTABLISH OPEN / CLOSED DRAINAGE	10	83	04-23-18	05-04-18
NBR1140	GRADE SLOPES	5	83	05-07-18	05-11-18
NBR1160	PLACE COMPACT BASE AGGREGATE	4	86	05-14-18	05-17-18
NBR1180	UNDERDRAIN INSTALLATION	5	83	05-18-18	05-24-18
NBR1220	BASE ASPHALT	9	86	05-25-18	06-06-18
NBR1240	INTERMEDIATE ASPHALT	4	95	06-07-18	06-12-18
NBR1260	TEMP PAVEMENT MARKINGS	2	93	06-13-18	06-14-18
I-95 RAMP TO MALLARD ROAD		**71**	**79**	**03-27-18**	**07-05-18**
NBE1280	INSTALL MOT ALONG EXISTING NB RAMP	2	27	03-27-18	03-28-18
NBE1300	ESTABLISH CONSTRUCTION ENTRANCE	1	27	03-29-18	03-29-18
NBE1320	CLEAR & GRUB	6	24	04-04-18	04-11-18
NBE1340	EROSION & SEDIMENT CONTROLS	2	24	04-12-18	04-13-18
NBE1360	STRIP TOPSOIL TO STOCKPILE	3	19	04-23-18	04-25-18
NBE1380	EARTHWORKS CUT/FILL	10	19	04-26-18	05-09-18
NBE1400	ESTABLISH OPEN / CLOSED DRAINAGE	10	70	05-10-18	05-23-18
NBE1420	GRADE SLOPES	5	70	05-24-18	05-31-18
NBE1440	PLACE COMPACT BASE AGGREGATE	4	72	06-01-18	06-06-18
NBE1460	UNDERDRAIN INSTALLATION	5	70	06-07-18	06-13-18
NBE1500	BASE ASPHALT	9	72	06-14-18	06-26-18
NBE1520	INTERMEDIATE ASPHALT	4	81	06-27-18	07-02-18
NBE1540	TEMP PAVEMENT MARKINGS	2	79	07-03-18	07-05-18
NB RAMP - MALLARD ROAD TO EXISTING BRIDGE		**68**	**68**	**04-16-18**	**07-20-18**
NBR1620	EROSION & SEDIMENT CONTROLS	2	29	04-16-18	04-17-18
NBR1630	CLEAR & GRUB	5	29	04-18-18	04-24-18
NBR1640	STRIP TOPSOIL TO STOCKPILE	3	18	05-10-18	05-14-18
NBR1660	EARTHWORKS CUT/FILL	10	19	05-15-18	05-28-18
NBR1680	ESTABLISH OPEN / CLOSED DRAINAGE	10	58	05-29-18	06-11-18
NBR1700	GRADE SLOPES	5	58	06-12-18	06-18-18
NBR1720	PLACE COMPACT BASE AGGREGATE	4	60	06-19-18	06-22-18
NBR1740	UNDERDRAIN INSTALLATION	5	58	06-25-18	06-29-18
NBR1780	BASE ASPHALT	9	60	07-02-18	07-12-18
NBR1800	INTERMEDIATE ASPHALT	4	69	07-13-18	07-18-18
NBR1820	TEMP PAVEMENT MARKINGS	2	68	07-19-18	07-20-18
MALLARD ROAD TO I-95 RAMP CONNECTIONS		**82**	**54**	**04-16-18**	**08-09-18**
MR1840	EROSION & SEDIMENT CONTROLS	2	40	04-16-18	04-17-18
MR1850	CLEAR & GRUB	8	34	04-25-18	05-04-18
MR1860	STRIP TOPSOIL TO STOCKPILE	3	19	05-29-18	05-31-18
MR1880	EARTHWORKS CUT/FILL	10	19	06-01-18	06-14-18
MR1900	ESTABLISH OPEN / CLOSED DRAINAGE	10	45	06-15-18	06-28-18
MR1920	GRADE SLOPES	5	45	06-29-18	07-06-18
MR1940	PLACE COMPACT BASE AGGREGATE	4	46	07-09-18	07-12-18
MR1960	UNDERDRAIN INSTALLATION	5	45	07-13-18	07-19-18
MR2000	BASE ASPHALT	9	46	07-20-18	08-01-18
MR2020	INTERMEDIATE ASPHALT	4	55	08-02-18	08-07-18
MR2040	TEMP PAVEMENT MARKINGS	2	54	08-08-18	08-09-18
CONSTRUCT SB MALLARD ROAD		**132**	**9**	**04-16-18**	**10-19-18**
MR2060	INSTALL MOT	2	50	04-16-18	04-17-18
MR2120	EROSION & SEDIMENT CONTROLS	2	50	04-18-18	04-19-18
MR2130	CLEAR & GRUB	8	39	05-07-18	05-16-18
MR2140	STRIP TOPSOIL TO STOCKPILE	3	19	06-15-18	06-19-18
MR2160	EARTHWORKS CUT/FILL	15	20	06-20-18	07-10-18
MR2180	ESTABLISH OPEN / CLOSED DRAINAGE	5	29	07-11-18	07-17-18
MR2200	GRADE SLOPES	8	29	07-18-18	07-27-18
MR2220	PLACE COMPACT BASE AGGREGATE	4	30	07-30-18	08-02-18
MR2240	UNDERDRAIN INSTALLATION	5	29	08-03-18	08-09-18
MR2250	INSTALL CURB AND GUTTER	5	29	08-10-18	08-16-18
MR2280	BASE ASPHALT	5	30	08-17-18	08-23-18
MR2300	INTERMEDIATE ASPHALT	4	39	08-24-18	08-29-18
MR2320	TEMP PAVEMENT MARKINGS	2	38	08-30-18	08-31-18
RECONSTRUCT NB MALLARD AND EB RT 606		**130**	**9**	**04-18-18**	**10-19-18**
MR3240	EROSION & SEDIMENT CONTROLS	2	97	04-18-18	04-19-18
MR3260	STRIP TOPSOIL TO STOCKPILE	2	58	06-15-18	06-18-18
MR3280	EARTHWORKS CUT/FILL	5	9	08-28-18	09-04-18
MR3300	ESTABLISH OPEN / CLOSED DRAINAGE	10	9	08-28-18	09-11-18

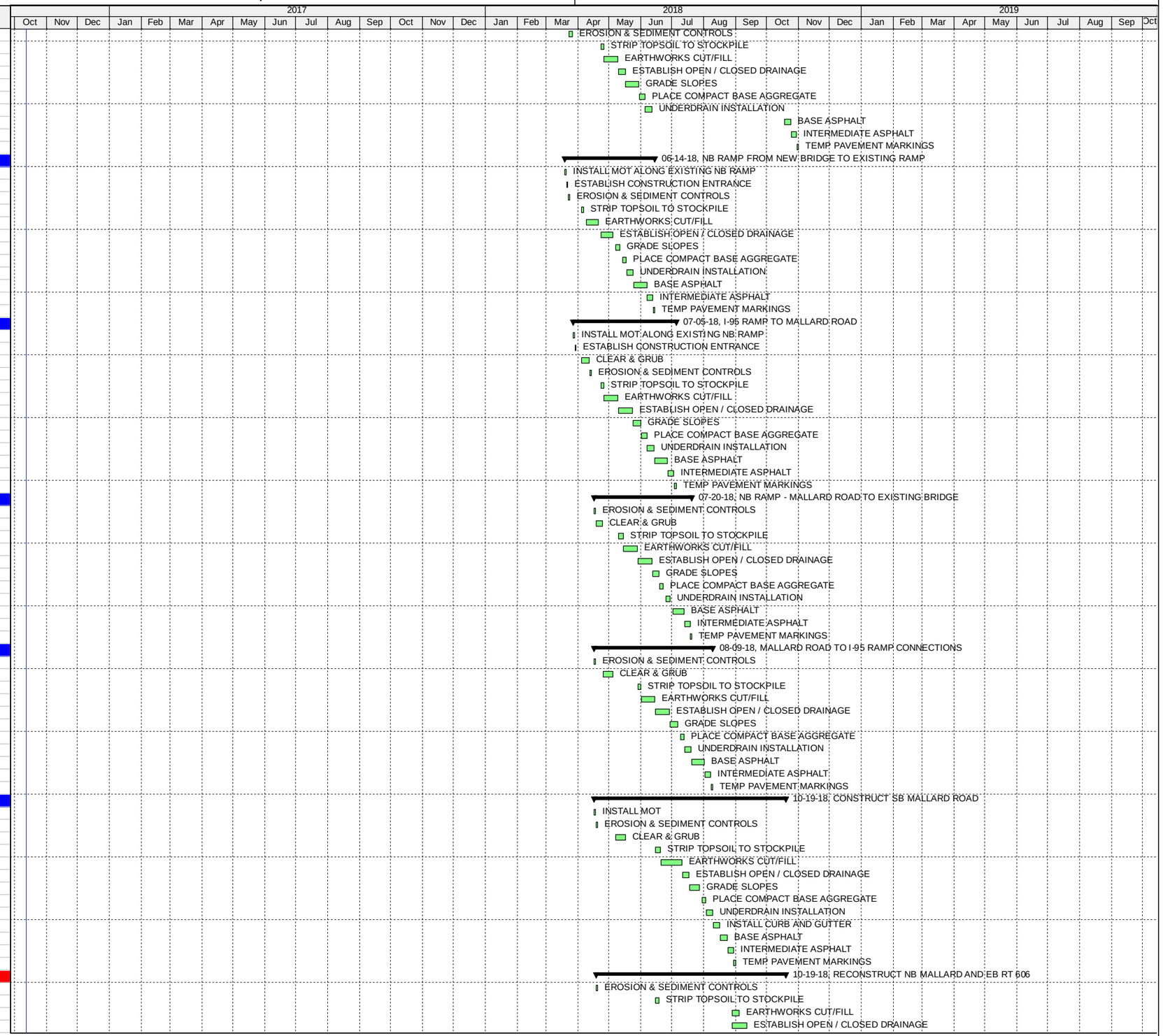

Actual Work
Remaining Work
Critical Remaining Work
Milestone
Summary

Shirley Contracting Company, LLC

Activity ID	Activity Name	Original	Total	Start	Finish
MR3320	GRADE SLOPES	5	9	09-12-18	09-18-18
MR3340	PLACE COMPACT BASE AGGREGATE	4	9	09-19-18	09-24-18
MR3360	UNDERDRAIN INSTALLATION	5	9	09-25-18	10-01-18
MR3370	INSTALL CURB AND GUTTER	5	9	10-02-18	10-08-18
MR3400	BASE ASPHALT	4	9	10-09-18	10-12-18
MR3420	INTERMEDIATE ASPHALT	4	9	10-15-18	10-18-18
MR3440	TEMP PAVEMENT MARKINGS	1	9	10-19-18	10-19-18
WB RT 606 FROM DRW TO EX. NB RAMP		**94**	**19**	**05-17-18**	**09-28-18**
WB2600	CLEAR & GRUB	8	46	05-17-18	05-28-18
WB2620	EROSION & SEDIMENT CONTROLS	2	45	05-29-18	05-30-18
WB2640	DEMO EXISTING STRUCTURE AND PAVEMENT	3	12	07-18-18	07-20-18
WB2660	EARTHWORKS CUT/FILL	15	9	07-26-18	08-15-18
WB2680	ESTABLISH OPEN / CLOSED DRAINAGE	6	9	08-16-18	08-23-18
WB2700	GRADE SLOPES	5	9	08-24-18	08-30-18
WB2720	PLACE COMPACT BASE AGGREGATE	4	10	08-31-18	09-05-18
WB2740	UNDERDRAIN INSTALLATION	5	10	09-06-18	09-12-18
WB2760	BASE ASPHALT	6	10	09-13-18	09-20-18
WB2780	INTERMEDIATE ASPHALT	4	19	09-21-18	09-26-18
WB2800	TEMP PAVEMENT MARKINGS	2	19	09-27-18	09-28-18
CONSTRUCT SIGNALS I-95 / ROUTE 606 / MALLARD / DRW		**46**	**9**	**08-16-18**	**10-19-18**
INT1000	INSTALL SE ELECTRICAL SERVICE / SIGNAL COMM	40	9	08-16-18	10-11-18
INT1020	ESTABLISH MOT FOR SIGNAL INSTALLATION	3	9	08-16-18	08-20-18
INT1040	DRAIL/CAST FOUNDATIONS	15	9	08-21-18	09-11-18
INT1060	INSTALL SIGNAL POLES AND MAST ARMS	15	9	09-12-18	10-02-18
INT1080	INSTALL TRAFFIC SIGNAL CABINENT & UPS	10	9	10-03-18	10-16-18
INT1100	PERFORM BURN-IN	2	9	10-17-18	10-18-18
INT1110	ACTIVATE SIGNAL TO FULL COLOR	1	9	10-19-18	10-19-18
OPEN NEW BRIDGE OVER I-95 AND INTERSECTION		**30**	**0**	**09-21-18**	**11-01-18**
B3044	INSTALL NEW TRAFFIC SIGNAGE	15	10	09-21-18	10-11-18
B3045	PROVIDE NOTIFICATION OF NEW TRAFFIC PATTERN	5	0	10-26-18	11-01-18
STAGE 2		**88**	**48**	**10-12-18**	**02-19-19**
DEMOLISH EXISTING BRIDGE		**58**	**48**	**11-02-18**	**01-29-19**
DEMO1000	MOBILIZE DEMOLITION CREW	2	0	11-02-18	11-05-18
DEMO1020	MOT FOR LANE CLOSURES	1	1	11-02-18	11-02-18
SPANS 4 AND 3		**16**	**0**	**11-06-18**	**11-29-18**
DEMO10	DEMO EXISTING BRIDGE - SPAN 4 AND ABUTMENT B	8	0	11-06-18	11-15-18
DEMO10	DEMO EXISTING BRIDGE- SPAN 3 AND PIER	8	0	11-16-18	11-29-18
SPANS 2 AND 1		**40**	**48**	**11-30-18**	**01-29-19**
DEMO10	DEMO EXISTING BRIDGE- SPAN 2	10	48	11-30-18	12-13-18
DEMO11	DEMO EXISTING BRIDGE- SPAN 1	10	48	12-14-18	12-31-18
DEMO11	DEMO PIER 2	10	48	12-14-18	12-31-18
DEMO11	DEMO PIER 1	10	48	01-02-19	01-15-19
DEMO11	DEMO SLOPE PROTECTION AND ABUTMENT A	10	48	01-16-19	01-29-19
EXCAVATE / GRADE / PAVE REMAINDER NB I-95 RAMP		**16**	**0**	**11-30-18**	**12-21-18**
NBR3060	EARTHWORKS CUT/FILL	3	0	11-30-18	12-04-18
NBR3080	ESTABLISH OPEN / CLOSED DRAINAGE	3	0	11-30-18	12-04-18
NBR3100	GRADE SLOPES	3	0	12-05-18	12-07-18
NBR3120	PLACE COMPACT BASE AGGREGATE	1	0	12-10-18	12-10-18
NBR3140	UNDERDRAIN INSTALLATION	1	0	12-11-18	12-11-18
NBR3180	BASE ASPHALT	4	0	12-12-18	12-17-18
NBR3200	INTERMEDIATE ASPHALT	2	0	12-18-18	12-19-18
NBR3220	TEMP PAVEMENT MARKINGS	1	0	12-20-18	12-20-18
NBR3230	INSTALL TRAFFIC SIGNAGE / COVER	10	0	12-10-18	12-21-18
NBR3250	OPEN RAMP "B" TO TRAFFIC	1	0	12-21-18	12-21-18
CONSTRUCT CONCRETE ISLANDS & FLATWORK		**41**	**85**	**10-12-18**	**12-11-18**
INT3600	SAWCUT AND INSTALL CURB ISLANDS	10	29	11-02-18	11-15-18
INT3620	INSTALL CURB	10	29	11-16-18	11-29-18
INT3640	INSTALL CONCRETE SIDEWALK	25	93	10-12-18	11-15-18
INT3660	GRADE ISLANDS	8	85	11-30-18	12-11-18
FINALIZE BRIDGE WALLS		**15**	**48**	**01-30-19**	**02-19-19**
B3700	INSTALL BRIDGE WALL FACE / COPING	15	48	01-30-19	02-19-19
STAGE 3		**63**	**62**	**03-25-19**	**06-20-19**
OBSCURE PAVEMENT		**15**	**10**	**03-25-19**	**04-12-19**
OP1000	MILL / EXCAVATE / HAUL PAVEMENT	15	0	03-25-19	04-12-19
OP1010	GRADE AND SPREAD TOPSOIL	10	10	04-01-19	04-12-19
SURFACE / MILL / OVERLAY TIE-INS		**10**	**0**	**04-15-19**	**04-26-19**
OP2000	MILL / PAVE SURFACE FOR RAMP TIE-INS	5	0	04-15-19	04-19-19
OP2010	SURFACE PAVE / FINAL STRIPE	10	0	04-15-19	04-26-19
FINAL STABILIZE GRADE		**6**	**0**	**04-29-19**	**05-06-19**
OP3000	FINALIZE GRADE AND SEED	6	0	04-29-19	05-06-19
INSPECT, PUNCHLIST, DEMOBILIZE & CLOSEOUT		**32**	**62**	**05-07-19**	**06-20-19**
FC1000	Closeout Documents, As-Builts, Materials Books	25	69	05-07-19	06-11-19
FC1010	Design-Builder Requests VDOT Inspection for Punchlist	1	0	05-07-19	05-07-19
FC1020	VDOT Performs Inspection	5	0	05-08-19	05-14-19
FC1030	VDOT Provides Punchlist	5	0	05-15-19	05-21-19
FC1040	Design-Builder Addresses Punchlist	20	0	05-22-19	06-19-19
FC1050	Punchlist Verification Inspection Performed	1	0	06-20-19	06-20-19

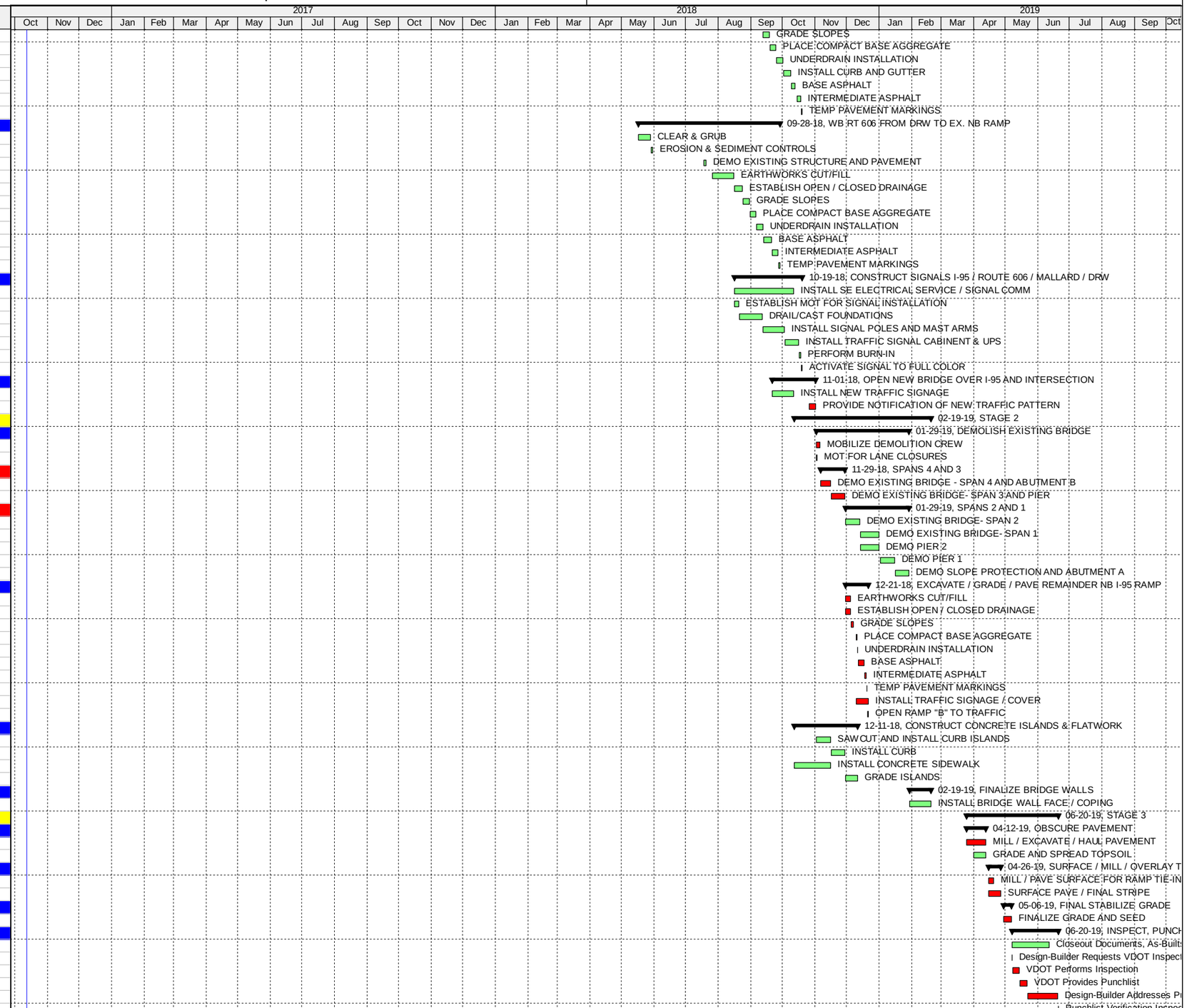

Actual Work
Remaining Work
Critical Remaining Work
Milestone
Summary

Shirley Contracting Company, LLC

Route 606 Bridge Replacement Over I-95 With 606 Improvements

4.7 Proposal Schedule - Critical Path

Data Date: October 12, 2016

Activity ID	Activity Name	Original	Total	Start	Finish
Route 606 Bridge Replacement Over I-95 With 606 Improve		699	0	12-16-16	09-18-19
GENERAL / PROJECT MILESTONES		699	0	12-16-16	09-18-19
MS1060	NOTICE TO PROCEED	0	0	12-16-16*	
MS1200	UNIQUE MILESTONE CLOSE EXISTING BRIDGE TO TRAFFIC	0	0		11-01-18*
MS1220	EARLY COMPLETION - NO EXCUSE INCENTIVE DATE (6/20/2019)	0	0		06-20-19*
MS1240	NO EXCUSE INCENTIVE DAILY RATE	90	0	06-21-19	09-18-19
MS1260	FINAL COMPLETION	0	0		09-18-19*
PHASE 1 - PRE-CONSTRUCTION		193	0	12-16-16	09-19-17
DESIGN PHASE		193	0	12-16-16	09-19-17
PRELIMINARY DESIGN		0	0		
RIGHT OF WAY PLANS		0	0		
GEOTECHNICAL INVESTIGATION AND REPORT		178	0	12-16-16	08-28-17
GT1000	PREPARE / SUBMIT SOIL BORING LOCATION PLAN	20	0	12-16-16	01-16-17
GT1010	REVIEW / APPROVE SOIL BORING LOCATION PLAN (INTERNAL ONLY)	5	0	01-17-17	01-23-17
GT1015	SURVEY LAYOUT SOIL BORING LOCATIONS	5	0	01-24-17	01-30-17
GT1020	GEOTECHNICAL FIELD INVESTIGATION	45	0	01-31-17	04-03-17
GT1030	LAB SAMPLING AND FIELD DATA COMPILATION	40	0	04-04-17	05-30-17
GT1040	PREPARE / SUBMIT BRIDGE GEOTECHNICAL ENGR REPORT (GER)	20	0	05-02-17	05-30-17
GT1070	REVIEW / APPROVE BRIDGE GER (90 DAY REVIEW for D/B PROJECT	90	0	05-31-17	08-28-17
ROADWAY DESIGN		0	0		
FHWA IMR		0	0		
BRIDGE DESIGN		15	0	08-29-17	09-19-17
BD3170	SUBMIT FINAL BRIDGE PLAN	1	0	08-29-17	08-29-17
BD3190	VDOT/FHWA REVIEW/COMMENT BRIDGE PLANS (FINAL SUBMISSIO	21	0	08-30-17	09-19-17
BD3200	FINAL BRIDGE PLANS APPROVED	0	0		09-19-17
UTILITY DESIGN (WATERLINE & SANITARY)		0	0		
RIGHT OF WAY ACQUISITION/EASEMENTS		0	0		
ACQUISITION PROCESS		0	0		
PUBLIC OUTREACH		0	0		
PUBLIC INVOLVEMENT		0	0		
PUBLIC AFFAIRS UPDATE		0	0		
UTILITY RELOCATIONS		0	0		
POWER DISTRIBUTION		0	0		
SANITARY SEWER		0	0		
WATER DISTRIBUTION		0	0		
SUMMIT IG - VDOT COMMUNICATIONS		0	0		
COMCAST - COMMUNICATIONS		0	0		
VERIZON - COMMUNICATIONS		0	0		
ENVIRONMENTAL PERMITTING		0	0		
THREATENED & ENDANGERED SPECIES		0	0		
LD 445 / STORMWATER PERMIT		0	0		
JOINT WETLANDS and WATERS PERMITTING		0	0		
HAZARDOUS MATERIAL & SPILL PREVENTION POLLUTION PLAN		0	0		
PHASE 2 - CONSTRUCTION		444	0	09-20-17	06-20-19
ADMINISTRATION & PIM		152	0	09-20-17	04-25-18
GB1200	QA/QC PREPARATORY INSPECTION MEETING - BEAM ERECTION	1	0	04-25-18	04-25-18
GB1620	DESIGN BRIDGE BEAMS	20	0	09-20-17	10-17-17
GB1640	REVIEW/APPROVE SHOP DRAWINGS	21	0	10-18-17	11-15-17
GB1660	FABRICATE BRIDGE BEAMS	110	0	11-16-17	04-24-18
PROJECT GENERAL ITEMS		0	0		
STAGE 1		133	0	04-26-18	11-01-18
606 BRIDGE OVER I-95		133	0	04-26-18	11-01-18
ABUTMENTS		0	0		
ABUTMENT A		0	0		
ABUTMENT B		0	0		
PIER CONSTRUCTION		0	0		
SUPERSTRUCTURE		133	0	04-26-18	11-01-18
B3000	MOBILIZE STRUCTURAL ERECTORS	3	0	04-26-18	04-30-18
B3010	ERECT BRIDGE BEAMS SPAN A	6	0	05-01-18	05-08-18
B3020	ERECT BRIDGE BEAMS SPAN B	6	0	05-09-18	05-16-18
B3030	INSTALL BRIDGE DECK OVERHANGS	15	0	05-17-18	06-07-18
B3040	INSTALL SIP DECKING	15	0	05-21-18	06-11-18
B3050	PLACE REINFORCING STEEL	15	0	06-12-18	07-02-18
B3060	MOBILIZE BIDWELL TO PROJECT	3	0	07-03-18	07-06-18
B3070	DRY RUN SCREED	3	0	07-09-18	07-11-18
B3080	CAST DECK SEG 1 (SPAN A)	8	0	07-12-18	07-23-18
B3090	CAST DECK SEG 2 (SPAN B)	8	0	07-24-18	08-02-18
B3095	INSTALL CONTINUITY DIAPHRAM / CLOSURE	15	0	08-03-18	08-23-18
B3100	CAST DECK SEG 3 (ABUT A JOINT)	8	0	08-24-18	09-04-18
B3110	CAST DECK SEG 4 (ABUT B JOINT)	8	0	09-05-18	09-14-18
B3120	CAST DECK SEG 5 (PIER 1 CLOSURE)	8	0	09-17-18	09-26-18
B3130	INSTALL PARAPETS	10	0	09-27-18	10-10-18
B3140	BR-27 / FENCING	12	0	10-11-18	10-26-18
B3150	GROOVE BRIDGE DECK	2	0	10-29-18	10-30-18
B3160	VDOT PERFORM SAFETY INSPECTION	2	0	10-31-18	11-01-18
APPROACH SLABS		0	0		
CONSTRUCT BRIDGE TIE-IN NE QUADRANT		0	0		
CONSTRUCT BRIDGE TIE-IN NW QUADRANT		0	0		
NB RAMP FROM NEW BRIDGE TO EXISTING RAMP		0	0		

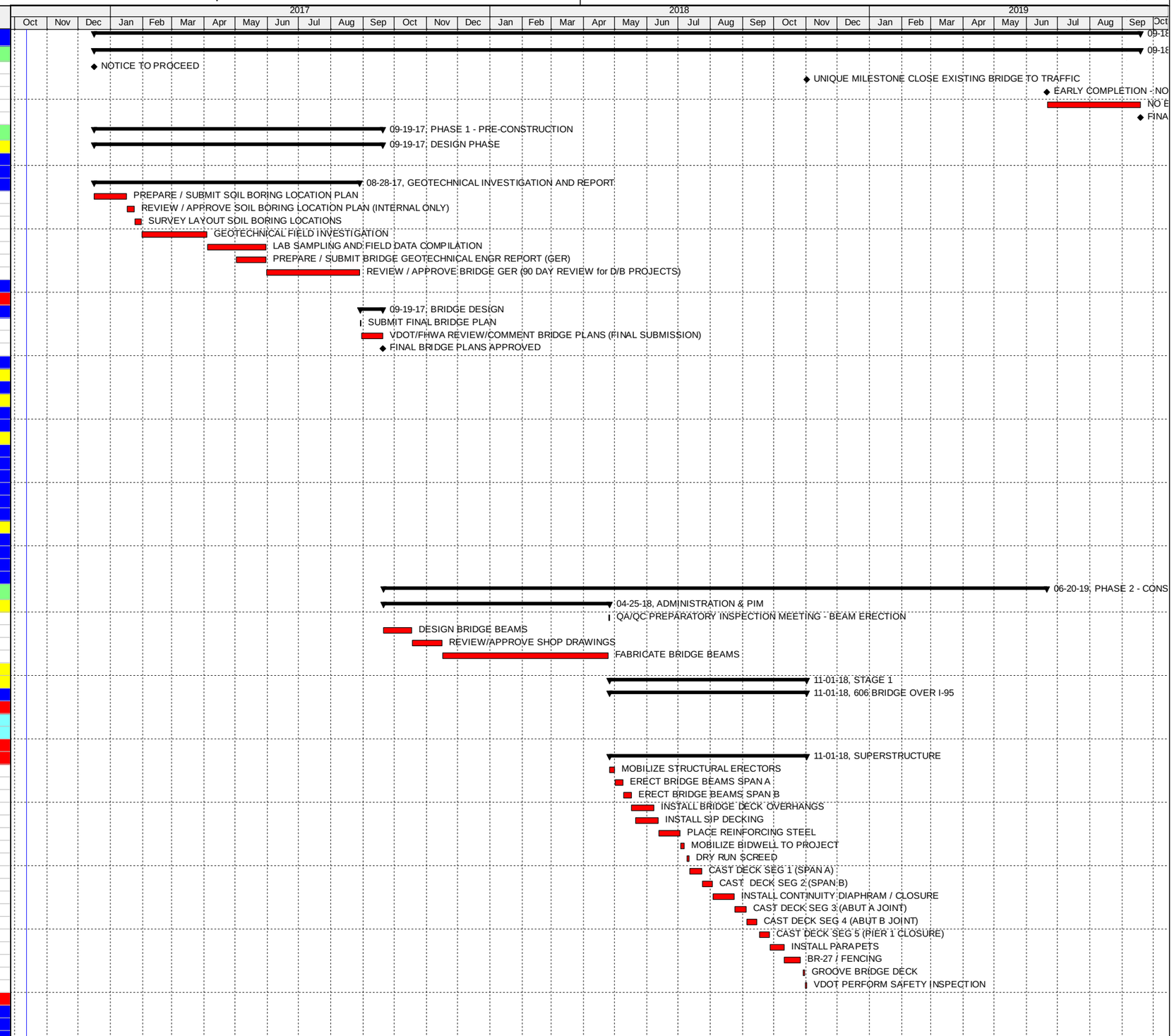

Actual Work
Remaining Work
Critical Remaining Work
Milestone
Summary

Shirley Contracting Company, LLC

Route 606 Bridge Replacement Over I-95 With 606 Improvements

4.7 Proposal Schedule - Critical Path

Data Date: October 12, 2016

Activity ID	Activity Name	Original	Total	Start	Finish
I-95 RAMP TO MALLARD ROAD		0	0		
NB RAMP - MALLARD ROAD TO EXISTING BRIDGE		0	0		
MALLARD ROAD TO I-95 RAMP CONNECTIONS		0	0		
CONSTRUCT SB MALLARD ROAD		0	0		
RECONSTRUCT NB MALLARD AND EB RT 606		0	0		
WB RT 606 FROM DRW TO EX. NB RAMP		0	0		
CONSTRUCT SIGNALS I-95 / ROUTE 606 / MALLARD / DRW		0	0		
OPEN NEW BRIDGE OVER I-95 AND INTERSECTION		5	0	10-26-18	11-01-18
B3045	PROVIDE NOTIFICATION OF NEW TRAFFIC PATTERN	5	0	10-26-18	11-01-18
STAGE 2		34	0	11-02-18	12-21-18
DEMOLISH EXISTING BRIDGE		18	0	11-02-18	11-29-18
DEMO1000	MOBILIZE DEMOLITION CREW	2	0	11-02-18	11-05-18
SPANS 4 AND 3		16	0	11-06-18	11-29-18
DEMO10	DEMO EXISTING BRIDGE - SPAN 4 AND ABUTMENT B	8	0	11-06-18	11-15-18
DEMO10	DEMO EXISTING BRIDGE- SPAN 3 AND PIER	8	0	11-16-18	11-29-18
SPANS 2 AND 1		0	0		
EXCAVATE / GRADE / PAVE REMAINDER NB I-95 RAMP		16	0	11-30-18	12-21-18
NBR3060	EARTHWORKS CUT/FILL	3	0	11-30-18	12-04-18
NBR3080	ESTABLISH OPEN / CLOSED DRAINAGE	3	0	11-30-18	12-04-18
NBR3100	GRADE SLOPES	3	0	12-05-18	12-07-18
NBR3120	PLACE COMPACT BASE AGGREGATE	1	0	12-10-18	12-10-18
NBR3140	UNDERDRAIN INSTALLATION	1	0	12-11-18	12-11-18
NBR3180	BASE ASPHALT	4	0	12-12-18	12-17-18
NBR3200	INTERMEDIATE ASPHALT	2	0	12-18-18	12-19-18
NBR3220	TEMP PAVEMENT MARKINGS	1	0	12-20-18	12-20-18
NBR3230	INSTALL TRAFFIC SIGNAGE / COVER	10	0	12-10-18	12-21-18
NBR3250	OPEN RAMP "B" TO TRAFFIC	1	0	12-21-18	12-21-18
CONSTRUCT CONCRETE ISLANDS & FLATWORK		0	0		
FINALIZE BRIDGE WALLS		0	0		
STAGE 3		63	0	03-25-19	06-20-19
OBSCURE PAVEMENT		15	0	03-25-19	04-12-19
OP1000	MILL / EXCAVATE / HAUL PAVEMENT	15	0	03-25-19	04-12-19
SURFACE / MILL / OVERLAY TIE-INS		10	0	04-15-19	04-26-19
OP2000	MILL / PAVE SURFACE FOR RAMP TIE-INS	5	0	04-15-19	04-19-19
OP2010	SURFACE PAVE / FINAL STRIPE	10	0	04-15-19	04-26-19
FINAL STABILIZE GRADE		6	0	04-29-19	05-06-19
OP3000	FINALIZE GRADE AND SEED	6	0	04-29-19	05-06-19
INSPECT, PUNCHLIST, DEMOBILIZE & CLOSEOUT		32	0	05-07-19	06-20-19
FC1010	Design-Builder Requests VDOT Inspection for Punchlist	1	0	05-07-19	05-07-19
FC1020	VDOT Performs Inspection	5	0	05-08-19	05-14-19
FC1030	VDOT Provides Punchlist	5	0	05-15-19	05-21-19
FC1040	Design-Builder Addresses Punchlist	20	0	05-22-19	06-19-19
FC1050	Punchlist Verification Inspection Performed	1	0	06-20-19	06-20-19

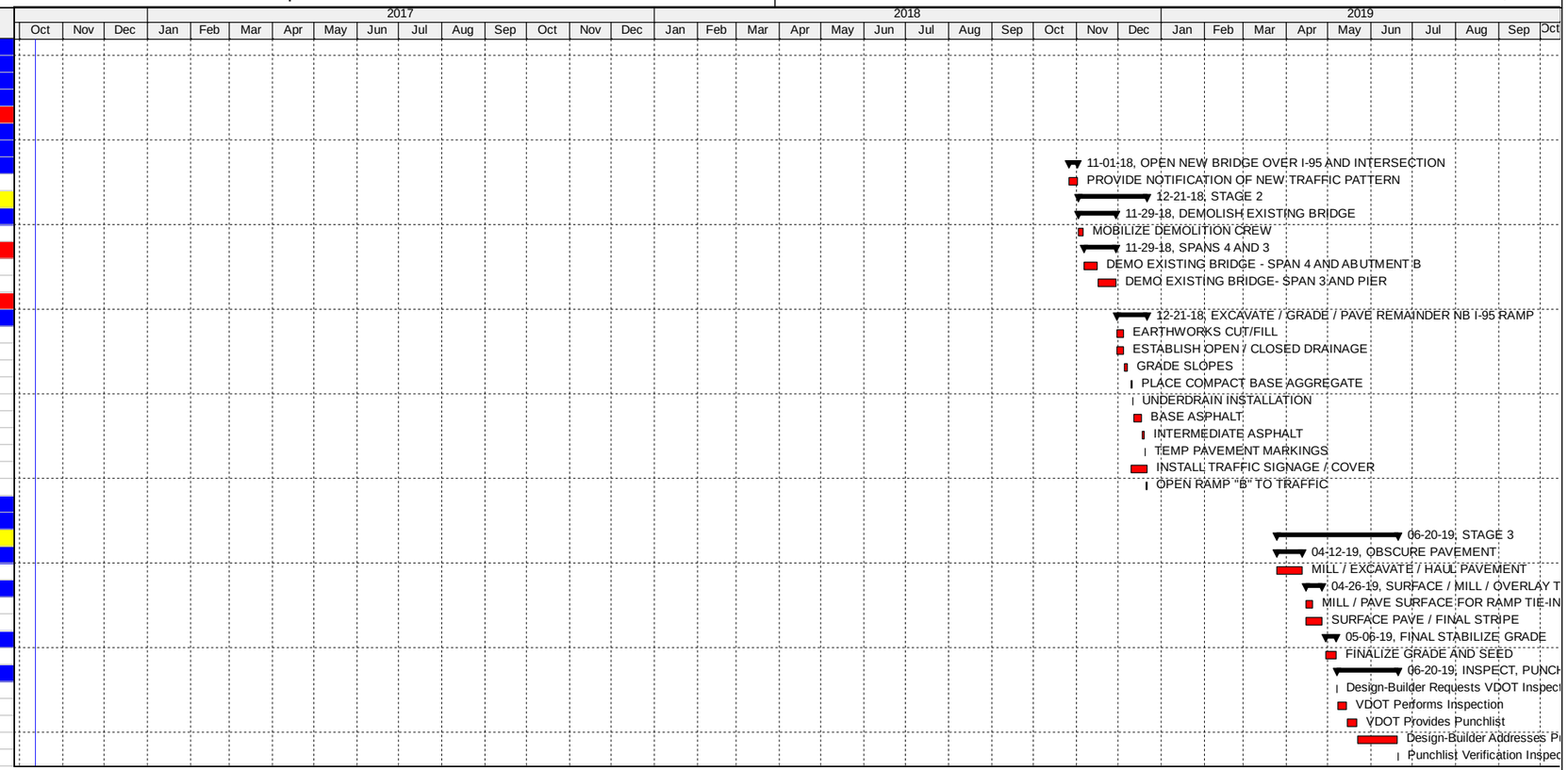

Actual Work
Remaining Work
Critical Remaining Work
Milestone
Summary

Shirley Contracting Company, LLC