VDOT
Virginia Department of Transportation

in association with
PARSONS

Technical Proposal-Volume I

I-395 HOV RAMP AT SEMINARY ROAD AND I-395 NB AUXILIARY LANE EXTENSION

State Project No.: 0395-100-722, 0395-100-736
Federal Project No.: IM-5A01(362)
Contract ID Number: C00096261DB50

January 9, 2013

ATTACHMENT 4.0.1.1

I-395 HOV RAMP AT SEMINARY ROAD WITH I-395 NB AUXILIARY LANE EXTENSION

TECHNICAL PROPOSAL CHECKLIST AND CONTENTS

Offerors shall furnish a copy of this Technical Proposal Checklist, with the page references added, with the Technical Proposal.

Technical Proposal Component	Form (if any)	RFP Part 1 Cross Reference	Included within page limit?	Technical Proposal Page Reference
Technical Proposal Checklist and Contents	Attachment 4.0.1.1	Section 4.0.1.1	no	
Acknowledgement of RFP, Revisions, and/or Addenda	Attachment 3.6 (Form C-78-RFP)	Sections 3.6, 4.0.1.1	no	A-1
Letter of Submittal	NA	Sections 4.1		
Letter of Submittal on Offeror's letterhead	NA	Section 4.1.1	yes	1-2
Offeror's official representative information	NA	Section 4.1.1	yes	1
Authorized representative's original signature	NA	Section 4.1.1	yes	2
Declaration of intent	NA	Section 4.1.2	yes	1
120 day declaration	NA	Section 4.1.3	yes	1
Principal Officer information	NA	Section 4.1.4	yes	2
Final Completion Date	NA	Section 4.1.5	yes	2
Proposal Payment Agreement or Waiver of Proposal Payment	Attachment 9.3.1 or 9.3.2	Section 4.1.6	no	A-2 thru A-5
Certification Regarding Debarment Forms	Attachment 11.8.6(a) Attachment 11.8.6(b)	Section 4.1.7	no	A-6 thru A-15
Offeror's Qualifications	NA	Section 4.2		
Confirmation that the information provided in the SOQ submittal remains true and accurate or indicates that any	NA	Section 4.2.1	yes	3

ATTACHMENT 4.0.1.1

I-395 HOV RAMP AT SEMINARY ROAD WITH I-395 NB AUXILIARY LANE EXTENSION

TECHNICAL PROPOSAL CHECKLIST AND CONTENTS

Technical Proposal Component	Form (if any)	RFP Part 1 Cross Reference	Included within page limit?	Technical Proposal Page Reference
requested changes were previously approved by VDOT				
Organizational chart with any updates since the SOQ submittal clearly identified to include Lead QA Inspector	NA	Section 4.2.2	yes	4
Revised narrative when organizational chart includes updates since the SOQ submittal, to include Lead QA Inspector	NA	Section 4.2.2	yes	3
Design Concept	NA	Section 4.3		
Conceptual Roadway Plans and description	NA	Section 4.3.1.1	yes	5-8
Conceptual Structural Plans and description	NA	Section 4.3.1.2	yes	8-12
Project Approach	NA	Section 4.4		
Environmental Management	NA	Section 4.4.1	yes	13-14
Utilities	NA	Section 4.4.2	yes	15-16
Geotechnical	NA	Section 4.4.3	yes	17-18
Quality Assurance / Quality Control	NA	Section 4.4.4		18-24
Coordination with Third Parties	NA	Section 4.4.5		24
Construction of Project	NA	Section 4.5		
Sequence of Construction	NA	Section 4.5.1	yes	25-27

ATTACHMENT 4.0.1.1

I-395 HOV RAMP AT SEMINARY ROAD WITH I-395 NB AUXILIARY LANE EXTENSION

TECHNICAL PROPOSAL CHECKLIST AND CONTENTS

Technical Proposal Component	Form (if any)	RFP Part 1 Cross Reference	Included within page limit?	Technical Proposal Page Reference
Transportation Management Plan	NA	Section 4.5.2	yes	27-29
Proposal Schedule	NA	Section 4.6		
Proposal Schedule	NA	Section 4.6	no	A-18 thru A-25
Proposal Schedule Narrative	NA	Section 4.6	no	A-16 thru A-17
Proposal Schedule in electronic format (CD-ROM)	NA	Section 4.6	no	Tab 6
Disadvantaged Business Enterprises (DBE)	NA	Section 4.7		
Written statement of percent DBE participation	NA	Section 4.7	yes	30
DBE subcontracting narrative	NA	Section 4.7	yes	30

1.

Letter of Submittal

Archer Western

January 9, 2013

Commonwealth of Virginia
Department of Transportation
1401 E. Broad Street
Richmond, Virginia 23219
Attention: Brenda L. Williams

SUBJECT: ***Technical Proposal – Contract ID Number C00096261DB50***
I-395 HOV Ramp at Seminary Road from Sanger Avenue to Seminary Road
I-395 NB Auxiliary Lane Extension from Duke Street to Sanger Avenue
State Project Number 0395-100-722, 0395-100-736
Federal Project Numbers IM-5A01(362), NH-5A01 (363) pending

Dear Ms. Williams:

We are pleased to submit our technical proposal for the Virginia Department of Transportation I-395 HOV Ramp and I-395 NB Auxiliary Lane Extension Project. Our proposal is organized in accordance with the RFP. Volume I consists of our narrative and the required forms and appendices. Volume II consists of our design concept graphics.

4.1.1 **OFFEROR'S POINT OF CONTACT:** Our proposed Design-Build Project Manager will serve as the Point of Contact:

Offeror's Primary Contact: **Brian Quinlan, PE, Senior Project Manager**
Address: 4445 Willard Avenue, Suite 1040, Chevy Chase, MD 20815
Phone: 301-347-4614 *Mobile*: 443-744-2066 *Fax*: 404-495-8701
Email: bquinlan@walshgroup.com

4.1.2 **DECLARATION OF INTENT TO ENTER INTO A CONTRACT:** Archer Western Construction, LLC, if selected will enter into a contract with VDOT for the I-395 HOV Ramp at Seminary Road and I-395 NB Auxillary Lane Extension Project in accordance with the terms of the RFP and subsequent addendum.

4.1.3 **DECLARATION OF TECHNICAL AND PRICE PROPOSAL EFFECTIVE DATES:** Pursuant to Part 1, Section 8.2, Archer Western Construction declares that the offer represented by our technical and price proposals will remain in full force and effect for one hundred and twenty (120) days after the date that the technical proposal is actually submitted to VDOT, currently January 9, 2013.

4.1.4 OFFEROR'S POINT OF CONTACT: Our proposed Design-Build Project Manager will serve as the Point of Contact:

Offeror's Primary Contact: **Brian Quinlan, PE, Senior Project Manager**
Address: 4445 Willard Avenue, Suite 1040, Chevy Chase, MD 20815
Phone: 301-347-4614 *Mobile*: 443-744-2066 *Fax*: 404-495-8701
Email: bquinlan@walshgroup.com

4.1.5 PRINCIPAL OFFICER OF THE OFFEROR: The Principal Officer of Archer Western is as follows:

Offeror's Principal Officer: **David B. Casey, Vice President**
Address: 2410 Paces Ferry Road, Suite 600, Atlanta, GA 30339
Phone: 404-495-8700

4.1.6 MILESTONE DATES:

Milestone	Proposal A	Proposal B
Interim (Open HOV Ramp)	9/24/15	9/24/15
Substantial Completion	12/18/15	12/18/15
Final Completion	12/18/15	12/18/15

4.1.7 EXECUTED PROPOSAL PAYMENT AGREEMENT: Please refer to the Appendix for the Proposal Payment Agreement.

4.1.8 DEBARMENT FORMS: Please refer to the Appendix for executed debarment forms 11.8.6(a) and 11.8.6(b) from all team members.

4.1.9 TECHNICAL PROPOSAL COMPLIANCE: Our Technical Proposal is fully compliant with the Design Criteria Table included in the RFP Technical Requirements (Part 2) and all other requirements of this RFP. Also, we certify that the our proposed limits of construction that include all stormwater management facilities are located within the right-of-way limits shown on the RFP plans with the exception of permanent and temporary easements and that our design concept only requires the Design Exception and/or Waivers identified in this proposal or included in the RFP or Addendum.

We appreciate the opportunity to submit our technical proposal for the design and construction of the I-395 HOV ramp at Seminary Road and the I-395 Northbound Auxiliary Lane Extension. In consideration of our unique experience and project approach, we are confident that the Archer Western Team has the professional and financial resources to make the reconstruction of the I-395 interchange project a resounding success.

Very truly yours,
Archer Western Construction, LLC

David B. Casey
Vice President

2.

Offeror's Qualifications

4.2 OFFEROR'S QUALIFICATIONS

4.2.1 CONFIRMATION OF SOQ INFORMATION

Archer Western Construction, LLC, confirms that the information submitted in our Statement of Qualifications remains true and accurate in accordance with Section 11.4.

4.2.2 ORGANIZATIONAL CHART

Please find a copy of our team's organizational chart for this project. It is the same chart that was submitted previously with our Statement of Qualifications. There are NO functional changes or revisions to the chart however, there have been a few personnel changes due to attrition and resignations. Personnel changes are highlighted in Pink on the chart and details regarding the changes are below:

- The Highway Lead has been changed to Krishna Potturi, PE from Bob Reed, PE due to Bob's resignation from Parsons.
- The ECS Manager has been changed to George Kirby from Mike Mroz due to Mike's resignation from Archer Western.
- The Schedule Engineer has been changed to Matt Mroz from Jordan Dutoi due to Jordan's resignation from Archer Western.
- The Traffic Control Supervisor has been changed to Joe Clark from Matt Clark. Joe is currently serving in this same role on the VDOT I-95 Richmond Bridge Rehabilitation Project. Joe already has the required certifications, is familiar with VDOT policies and procedures, and is very experienced with interstate highway multi-lane closures.

VDOT
Virginia Department of Transportation

Third-Party Stakeholders

FHWA-EFLHD
VA DEQ
Dept. of Defense
City of Alexandria
Fairfax County
Media
Traveling Public
Adjacent Contracts
Private Utilities
Public Utilities

Design-Build Project Manager

Brian Quinlan, PE[1]

Project Executive

David Casey[1]

ROW Acquisition

ROW Manager
Jim Moore[7]

Review Appraiser

Fee Appraiser

Public Relations Manager

John Undeland[9]

Design

Design Manager
Josh Wade, PE[2]

Lead Structural Engineer
Dan Walsh, PE[4]

Design Quality Mgr.
Greg Anderson, PE[2]

Highway Lead
Krishna Potturi, PE[2]

Landscape Architect
Craig Richardson, RLA[2]

H&H Lead
Partha Sarathi, PE[5]

Traffic Lead
Keith Riniker, PE, PTOE[10]

MOT Lead
Laura Wilton, PE[2]

ITS Lead
Sajjad Alam, PE[2]

Utilities Lead
Prakash Patel, PE[2]

Lighting/Signals Lead
Azim Mohammed, PE[2*]

Subconsultants

ALA
Structures

Accompong
MOT, Traffic, and Drainage Design

Endesco
Drainage, H&H, and E&SC

RDA
Survey

Schnabel
Geotechnical and Pavement

SWA
Traffic and Signal Analyses

Construction

Construction Manager
Andy Palahnuk[1]

Superintendent
Moses Alfred[1]

ESC Manager
George Kirby[1]

EEO Officer
Sharon Perez[1]

Utilities Coordinator
Tom Medeiros[1]

Project Controls
Tommera Roberson[1]

Schedule Engineer
Matt Mroz[1]

Traffic Control Supervisor
Joe Clark[1]

Quality Control

Construction Quality Manager
Stefan Pustam[1]

QC Inspector(s)

QC Testing

(QA and QC will have separate labs and inspectors)

Safety Manager

Jose Cortez, CSM[1]

Quality Assurance

Quality Assurance Manager
Ali Abdolahi, PE, CCM[6]

QA Inspectors

QA Testing

(QA and QC will have separate labs and inspectors)

LEGEND

[1]Archer Western Construction, LLC
[2]Parsons Transportation Group Inc. of VA
[3]Accompong Engineering Group LLC ✪
[4]Athavale, Lystad & Associates, Inc. (ALA) ✪
[5]Endesco, Inc. ✪
[6]McDonough Bolyard Peck, Inc. (MBP)
[7]Rinker Design Associates, P.C. (RDA)
[8]Schnabel Engineering Consultants, Inc.
[9]Stratacomm LLC
[10]Sabra, Wang & Associates, Inc. (SWA) ✪

Key Personnel ✪ *DBE*
**Licensed in a state other than Virginia*

3.

Design Concept

4.3. DESIGN CONCEPT

The Project consists of; the I-395 HOV Ramp at Seminary Road (HOV Ramp Project), and the I-395 NB Auxiliary Lane Extension (Aux-Lane Project). The proposed HOV ramp will be built on the east side of the HOV lanes and connects to the third level of Seminary Road Bridge. The new intersection where the proposed ramp ties to the bridge will be controlled by a traffic signal. A separate pedestrian bridge over I-395 will be built to current ADA standards north of Seminary Road. In addition, Seminary Road Bridge deck will be reconstructed along with superstructure and substructure rehabilitation. The northbound lanes of I-395 will be shifted to the east and widened from Sanger Avenue to Seminary Road including widening the Seminary Road exit ramp. The I-395 NB auxiliary lane extension project will widen I-395 northbound lanes from Duke Street to Sanger Avenue and tie into the HOV ramp project; thereby creating a continuous Auxiliary Lane from Duke Street to Seminary Road.

The Archer Western/Parsons Team certifies that the design concept submitted in this technical proposal is fully compliant and will meet all technical requirements of the RFP and design criteria identified in the design criteria table (Table 2.3.1 of RFP Part 2), the limits of construction are within the existing/proposed right-of-way limits shown in the RFP plans with the exception of permanent and temporary easements, and our design does not include elements that require Design Exceptions and/or Design Waivers unless they are identified or included in the RFP or Addendum. During the proposal phase, considerable effort was expended towards validating the design as well as developing optimal solutions. We developed our design and construction methods taking long-term asset performance and durability into consideration, resulting in our conceptual design which reduces the need to future inspection and maintenance. The RFP design identifies one design exception for the shoulder width along northbound I-395. We confirm that our design does not require any other design exceptions. All the proposed improvements will be within the proposed right-of-way limits shown in the RFP plans with the exception of VDOT anticipated permanent and temporary easements.

ROADWAY CONCEPTUAL PLANS

ROADWAY GEOMETRY

I-395 consists of six-lane General Purpose facility with a barrier-separated two-lane HOV section in the median. In the peak hours of travel, the HOV facility is restricted to vehicles with 3 or more passengers and is reversible based on the peak direction of travel. The posted speed limit on the General Purpose lanes is 55 mph and that on the HOV lanes is 65 mph and the design speed for I-395 is 70 mph. Seminary Road (VA Route 420) is a four-lane urban arterial that runs in the east-west and is surrounded by a mix of commercial, office, and residential land uses. The design speed on Seminary Road is 35 mph. The proposed widening on I-395 northbound lanes will result in a combined storage and deceleration lane for the off ramp about 3,500 feet from the beginning of the Duke Street exit lane to the signalized intersection with Seminary Road at the second level.

The proposed HOV ramp has a design speed of 40 mph and the length of the ramp will be approximately 1,830 feet from the physical gore to the intersection with Seminary Road. The acceleration/deceleration lane for the ramp will be approximately 1,400 feet with a 300 foot taper. The ramp will widen to accommodate two lanes at the intersection with Seminary Rd with approximately 595 feet of auxiliary lane and a 300 foot taper. The vertical alignment for the HOV ramp is crucial since the ramp overlaps the I-395 northbound shoulder. It is particularly of concern at piers as the geometry dictates the vertical clearance. In our conceptual design we raised the profile by 2 feet to accommodate a 69” girder and attain the minimum vertical clearance of 16.5 feet over I-395.

Our team will develop the design in compliance with the criteria summarized in the Design Criteria Table (Table 2.3.2 of RFP Part 2), and VDOT Road Design Manual.

Table: Roadway Inventory and Minimum Design Criteria

	Interstate 395 Northbound	Interstate 395 Northbound Ramp	Interstate 395 HOV Ramp	Duke Street Ramp	Seminary Road	Seminary Road Pedestrian Route Bridge
Roadway Classification	Urban Principal Arterial	Interchange Ramp	Interchange Ramp	Interchange Ramp	Urban Minor Arterial	N/A
Geometric Design Standard	GS-5	GS-R	GS-R	GS-R	GS-6	N/A - Sidewalk
Design Speed (mph)	70	40	35	40	40	N/A
Superelevation Standard	TC-5.11 R	TC-5.11 R	TC-5.11R	TC-5.11 R	TC-5.11R	N/A
Min. Vertical Clearance	14’6” over Sanger Ave	N/A	16’6” over I-395	N/A	16’6” over all roadways	17’6”
Minimum Lane Width	12’	12’	12’ – 2 lanes 16’ – 1 lane	12’	12’	14’

RETAINING WALLS

The RFP plans propose retaining walls on the outside of I-395 widening for the entire length of the project. Our Team has developed a 3-D model of the entire corridor and optimized the locations of the retaining walls thereby reducing the total length of the retaining walls to one-fourth of what is shown in the RFP plans. Retaining walls will be designed in accordance with VDOT and AASHTO specifications and requirements. We are proposing the use of MSE walls and the fill material used in the reinforced zone will be a crushed aggregate with properties in accordance with VDOT’s special provisions. MSE walls will be constructed at the top of 2H:1V embankments. AASHTO requires a bench in front of these walls. Additionally, deeper than typical strap lengths will be needed to satisfy global stability requirements. Preliminary estimates for walls up to 13 feet tall indicate minimum strap lengths of 1.0H, where H is the wall height, will be required for MSE walls with level backslopes and 2H:1V front slopes and a bench.

NOISE WALLS

According to Noise studies provided in the RFP, three noise barriers are proposed for the HOV ramp project and three noise barriers are proposed for the Auxiliary lane project. On the HOV ramp project, Barrier 1 will be 4,200 feet long and 30 feet high and is designed to benefit the impacted homes east of I-395 between Richenbacher Avenue and Seminary Road. Barrier 2 would be 900 feet long and 15 feet high, and is designed to provide benefit to the 72 impacted patios and balconies of the multi-family homes along Essex Court. Barrier 3 would be 1,258 feet long and 15 feet in height, and is designed to benefit the five impacted recreational receptors in the Winkler Botanical Preserve trail network.

For the Auxiliary lane project, Barrier 3 would be 2,575 feet long along I-395, with a uniform height of 25 feet and is designed to benefit the impacted homes east of I-395 between N. Van Dorn Street near the Landmark Mall and Richenbacher Avenue.

As per Addendum #2, additional permanent noise mitigation requirements, in the form of two additional noise barrier walls, have been identified in the “I-395 Auxiliary Lane Noise Analysis Technical Report (October 2012)” prepared with the Categorical Exclusion for the Aux Lane Project. Barrier #1 is designed to benefit impacted homes west of I-395 between Little River Turnpike and Quantrell Avenue and Barrier #2 is designed to benefit impacted homes west of I-395 between Quantrell Avenue and Sanger Avenue. We will complete additional survey to evaluate the location and design of these additional barriers. The Noise barriers along SB I-395 will be located to allow for a future single lane widening of SB I-395. We

will complete the final Noise Abatement Policy and the Highway Traffic Noise Impact Analysis Guidance Manual. The construction of these two barriers is not included in this proposal.

We will submit a Final Noise Abatement Design Report (NADR) depicting barrier location(s) and dimension(s) in compliance with the Virginia State Noise Abatement Policy and the Highway Traffic Noise Impact Analysis Guidance Manual. All ground-mounted sound barrier walls will be precast concrete and structure mounted sound barrier walls will be lightweight material and will be sound absorptive (where appropriate) with an Ashlar Stone or similar finish.

STORMWATER MANAGEMENT

Stormwater Management will be developed per Virginia Stormwater Management Program (VSMP) guidelines and Stormwater Program Advisories to address the water quality and quantity requirements for the site. A stormwater management plan will be prepared that will meet both the quality and quantity control requirements per state guidelines. Water Quality improvements design will utilize the Department's Technology Based criteria. The stormwater from the project site drains into three different locations: Existing Winkler Wet Pond, the roadside ditch to the east of I-395, and the roadside ditch to the west of I-395. Based on the preliminary design, there will be some decrease in total impervious area from this project to Existing Winkler Wet Pond. Post construction, the drainage area to the pond will be 34.98 Acres and the impervious area draining to the pond will decrease by 0.1% and therefore, this outfall does not need to be analyzed and is considered adequate. The watershed to the project site is more than 100 times the project area. Based on the recommendations per "Stormwater Program Advisory SWPA 12-01" there will be no SWM quantity control for the project. Since the net new impervious area increase to each of these outfalls is less than 16%, water quality treatment is not required for this project.

STORM DRAINAGE DESIGN

Our team will provide drainage design using applicable design criteria and policies outlined in VDOT's Drainage Manual and the Instructional & Information Memoranda. There are several existing closed storm sewer systems on the project site discharging to three different outfalls mentioned above. Existing storm sewer systems at and near the site will be evaluated for their capacities, the ability to handle any increase in flow, and their ability to withstand erosion in accordance with the state erosion and sediment control regulations (Minimum Standard 19). The stormwater from the east is collected partially in a closed storm sewer system and partially by an existing roadside ditch on east side of I-395 which eventually will discharge into Holmes Run. We intend to remove the existing concrete ditch from Sta. 283+50 to 288+50, from Sta. 293+50 to 306+00, and from Sta. 307+00 to 309+00 and replace these lengths with 48" pipes to eliminate to need for a retaining wall and provide additional landscaping.

TRAFFIC CONTROL DEVICES

A new traffic signal is proposed at the HOV Ramp and Seminary Road intersection. The traffic signal will be designed and constructed in accordance with VDOT standards and will be coordinated with VDOT and Dominion Virginia Power. Three gate control systems (GCS) will be provided at the intersection of the HOV Ramp and Seminary Road. The GCS will include the gates that control access to HOV Ramp, the DMS signs that alert drivers whether the HOV Ramp is open, closed, or closing, and Closed-Circuit Television (CCTV) cameras that provide a visual confirmation of gate position and the sign message. The traffic signal at this intersection will be part of the GCS and the phasing of the traffic signal will be synchronized with the open/closed position of the gate. The GCS will be integrated with VDOT's Advanced Traffic Management System (ATMS) software and compatible with I-95 Express Lanes Project ATMS. In addition to the two CCTV cameras associated with GCS assemblies, we will replace existing CCTV cameras impacted by the project with new HD IP CCTV cameras. We estimate providing nine CCTVs and all of these will be integrated with VDOT's ATMS system and the work will be coordinated with the VDOT Public Safety and Transportation Operations Center. The project will require changes to various roadway signs on I-395 HOV, I-395 NB GP

lanes, and Seminary Road. We anticipate replacing 16 overhead signs and several other ground mounted signs. All signs will be designed and constructed using MUTCD and VDOT Standards and sight lines and sight distances will be considered in the final placement of all project signage.

LIGHTING

Our team will design and construct new roadway lighting systems along the new HOV ramp and the new pedestrian route, and replace all impacted roadway lighting structures within the project limits. The roadway lighting systems will be designed in accordance with VDOT's Traffic Engineering Design Manual, Guides and Informational Instructions (IIM-LD-231), as well as the American National Standard Practice for Roadway Lighting publication (RP-8-00) prepared by the American National Standards Institute (ANSI) and the Illuminating Engineering Society of North America (IESNA). There are 52 light poles along I-395 impacted by the widening. These will be replaced by VDOT R&B Standard 40'- LP-1 - 400W luminaires. The proposed pedestrian bridge will require 19 pedestrian decorative 150W luminaires spaced every 80'. The existing 20' light pole on Sanger Avenue will be replaced with an underpass wall pack 150W luminaire.

LANDSCAPING

Our team's landscape plan goes above and beyond the RFP requirement of approximately 35,000 square feet for the Ramp Project, and approximately 30,000 square feet for the Aux-Lane Project. In our concept, as shown in Volume II of this technical proposal, the sideslopes along the I-395 northbound lanes will be planted with native shrubs and grass. We have investigated and analyzed the corridor to ensure our thorough knowledge and understanding of the requirements, the terrain and existing natural vegetation, and the unique environmental issues. Wherever feasible, infill plant material will be provided to replant areas disturbed due to grading operations. We are aware of the variety of existing land use types throughout the corridor and several neighborhoods that will require us to incorporate context sensitive design solutions. Landscaping and planting designs for the corridor will provide a landscape design that preserves the existing natural environment wherever feasible and incorporate a minimalistic approach that is sensitive to the surrounding neighborhoods and long term maintenance.

All landscaping will be prepared by a Virginia licensed Landscape Architect in accordance with the Memo for Guidance for Planting in the Clear Zone and Landscaping for VDOT Projects, dated November 2, 2000, Guidelines for Context Sensitive Solutions/Design, dated February 25, 2004, and FHWA 23 CFR 752 Landscaping and Roadside Development and the attached Special Provisions for Section 605 and 244 of the VDOT Road and Bridge Standards.

STRUCTURAL CONCEPTUAL PLANS

Archer Western/Parsons Team confirms that the proposed bridges will be designed in accordance with AASHTO LRFD Bridge Design Specifications, 5th Edition, 2010: 2010 Interim Specifications and the most current version of VDOT Modifications (IIM-S&B-80) and the additional Substructure and Foundation Criteria attachment. VDOT's Standard Details, including VDOT Design Aids, will be used to the maximum extent possible in the development of the bridge plans. These bridges will utilize low permeability concrete in accordance with the Special Provisions for Low Permeability Concrete for Design-Build Project. Corrosion Resistant Reinforcing Steel will be utilized in accordance with VDOT IIM-S&B-81. All plain deformed reinforcing Steel will conform to ASTM A615 Grade 60.

SEMINARY ROAD BRIDGE

The existing bridge carries four lanes of traffic and two sidewalks of Seminary Road over I-395 and the second level rotary of the interchange. The roadway and bridge is on a curved horizontal alignment. The existing bridge consists of a reinforced concrete deck on five spans of straight, simple-span, composite steel plate girders. The existing piers are two-column reinforced concrete hammerhead-type piers. Piers 1, 2 and

3 are supported on pile footings, while pier 4 is supported by a spread footing. The horizontal alignment is accommodated by a variable concrete deck overhang.

Our team proposes to **replace the existing superstructure of the bridge in stages with a lightweight, reinforced concrete deck on continuous, curved, composite steel plate-girders using ASTM12 A709, Grade 50W steel, painted in accordance with VDOT Specifications.** The new superstructure will provide two 27'-0" clear roadways and a 16'-0" median. The total out to out width of the new superstructure will be 73'-4" – approximately 2'-7" wider than the existing superstructure. As the new concrete deck slab cantilevers will exceed the VDOT-limit of 0.3 x girder spacing, the concrete deck will be thickened between the first interior girder and fascia girder extending into the cantilever to meet the deck slab construction specification tolerances without overstressing primary or secondary members.

The new superstructure framing shall be integral with the steel framing of the HOV Ramp bridge intersecting at Pier 2. The concrete deck will also be cast integrally so that there will be no deck expansion joint at the interface or at Pier 2. The new superstructure will be designed to accommodate forces and movements, including the connection between this bridge and the HOV Ramp bridge, such that the performance and maintenance are optimized for a 75-year service life.

The steel plate-girders will be supported by new laminated elastomeric bearings on reconstructed reinforced concrete pedestals on the piers and abutments. The existing abutment backwalls will be replaced to accommodate the new tooth expansion joints and new full-width (curb to curb) VDOT-standard structural approach slabs. The bridge barriers will consist of VDOT standard F-shape concrete parapet. The parapets will continue on the approaches for the length of the four existing wingwalls. As the new superstructure is wider than the existing superstructure by approximately 2'-7", the existing wingwalls will be partially demolished and reconstructed to accommodate the wider superstructure and F-shape concrete parapets. All new concrete will include Corrosion Resistant Reinforcing Steel in accordance with VDOT IIM-S&B-81. In general, VDOT's Standard Details will be used to the maximum extent possible in the development of the plans.

Replacement of the superstructure will be constructed in stages to comply with the provisions of Section 2.11 of the RFP, Transportation Management Plan. Design of the new superstructure will be performed for each stage of construction to ensure each stage meets all AASHTO LRFD and VDOT design specifications. Additionally, the existing piers and abutments will be analyzed to verify that they meet all capacity requirements dictated by AASHTO LRFD and VDOT Specifications. We have performed sufficient analysis of the proposed superstructure and existing substructure (including foundations) in accordance with RFP Part 2, Section 2.2.1 to verify that no strengthening or other major rehabilitation will be required on the existing substructure units with the exception of replacement of the existing bearing pedestals. However, the existing substructure units will be repaired as recommended on page 2 of 27 in the 2012 Biennial Inspection Report for Short Term and Long Term Maintenance, and as shown in the table below.

Seminary Road Bridge Inspection Report Recommendations (included in Proposal)	
Short Term Maintenance	• Reseal Joints at Abutment B Backwal and stem • Secure Sidewalk access panels at all lights • Replace hand access cover plates on light poles • Replace damaged light under bridge
Long Term Maintenance	• Install latex overlay on deck and groove • Paint entire fascia girders and all bottom flanges • Repair spalls and delaminated areas on substructure

Bridge deck drainage analysis and design will be performed in accordance with the latest version of VDOT Manual of Structure and Bridge Division, Vol. V – Part 2, FHWA Publication HEC21- Design of Bridge Deck Drainage, and the VDOT Drainage Manual. All deck drainage will be collected and piped to existing storm water collection systems - including water collected from the abutment trough.

The following utilities and their associated structural supports and/or hangers will be designed, furnished and installed:

- Lighting on the bridge.
- Signalization and Intersection lighting
- Conduits and cables for signal interconnection
- Fire Protection System
- HOV Gate System

HOV RAMP BRIDGE

The proposed bridge will be a nine-span structure consisting of eight 120-ft spans of 69” deep prestressed concrete bulb-tee (PCBT-69) beams and one variable length span of steel rolled beams. The substructure will be reinforced concrete hammerhead piers and a Virginia alternate abutment. The piers and abutment will be founded on steel H-pile footings. The ramp structure will vary in width from 31’-4” at the abutment (one 16’-0” lane and two 6’-0” shoulders with F-shape parapets) to 39’-4” (one 24’-0” lane with two 6’-0” shoulders and F-shape parapets) beginning in span D and extending to the interface with the Seminary Road bridge. Span A consists of four VDOT standard PCBT-69 beams at 8’-9” spacing. Spans B and C consist of five VDOT standard PCBT-69 beams at variable spacing. Spans D thru H consist of five VDOT standard PCBT-69 beams at 8’-9” spacing. The beams will be made continuous for superimposed dead loads and live loads with a closure diaphragm located at each intermediate pier. The PCBT-69 beams will consist of 7,000 psi concrete. A steel plate girder alternative was also investigated for this bridge. However, a comparison with the aforementioned prestressed beam alternative indicates that the PCBT-69 superstructure is the more economically feasible alternative for Spans A thru H.

Span I consists of a variable-width rolled beam span extending past Pier 9 and connecting directly to the superstructure of the Seminary Road bridge. The framing of span I will utilize secondary rolled beams (framing between the main beams and the Seminary Road superstructure) to accommodate the turning radius at the interface with Seminary Road. Structural steel will be ASTM A709, Grade 50W and will be cleaned and painted in accordance with the requirements of Section 411 of the VDOT Specifications. The finish color of the steel framing will be brown, 595-20059. A tooth expansion joint will be provided at the abutment and between spans H and I at Pier 8. The tooth expansion joints will not be skewed. The concrete deck of Span I will be integral with the new concrete deck of the Seminary Road bridge.

The south approaches to the HOV Ramp Bridge from I-395 will consist of MSE walls located on each side of the roadway with F-shape parapets and moment slabs. The MSE walls will terminate at the abutment. A full-width approach slab will be provided at the abutment.

The proposed HOV Ramp bridge and approaches are on a horizontally curved alignment with the exception of the interface with Seminary Road, which is on a straight alignment. The vertical profile of the bridge consists of a 5.00% gradient up to a crest vertical curve centered near Pier 2. From there, the profile continues at a 4.48% gradient to a second crest vertical curve located in span H. The profile then continues at a -2.00% gradient to the interface with the Seminary Road bridge. The bridge section has a superelevation of 2% to accommodate the horizontal curve.

Bridge deck drainage analysis and design will be performed in accordance with the latest version of VDOT Manual of Structure and Bridge Division, Vol. V – Part 2, FHWA Publication HEC21- Design of Bridge Deck Drainage, and the VDOT Drainage Manual. All deck drainage will be collected and piped to existing

storm water collection systems - including water collected from the abutment trough. Bridge Lighting and Fire Protection System will also be provided on the bridge.

PROPOSED PEDESTRIAN BRIDGE, B-686

The proposed pedestrian bridge over I-395 will be constructed on a new alignment north of the existing Seminary Road Bridge and it will have a minimum vertical clearance of 17'-6" over the existing roadway. The main portion of the proposed bridge superstructure will consist of pre-fabricated steel through truss with a light-weight concrete deck. The bridge superstructure and approaches will have a 14'-0" wide pedestrian walkway and it will allow accessibility for light maintenance vehicles. The finished grade of the bridge superstructure will be limited to 5% positive or negative grade. The approaches will not have any switchbacks/doglegs and the grade will not exceed positive or negative 5% grade. The west end span will consist of cast-in-place concrete deck supported by two steel plate girders and it will tie to the existing abutment. The existing cellular abutment at the west end will be modified to accommodate the new approach walkway width and profile grade. On the east end the approach walkway will consist of cast-in-place concrete slab and will be supported by new MSE walls. Pedestrian railing/fencing will be used on both sides of the bridge and approaches. The railing/fencing will meet the current VDOT specifications and will provide a partially enclosed curved top. The steel railing will be galvanized and powder-coated (Coal Black, Federal Color No. 27038). Aesthetic treatment equivalent to ashlar stone finish will be provided on each bridge pier, abutment and approach retaining wall. The actual treatment used will be determined during the design process through coordination with VDOT and the City of Alexandria.

PROPOSED SANGER AVENUE BRIDGE, B-685

The proposed construction for this existing bridge will include the addition of an auxiliary lane and structure mounted sound wall on the I-395 NB GP lane bridge and the reconstruction of the deck overhang and addition of structure mounted sound wall on the I-395 SB GP lane bridge. A minimum vertical clearance of 14'-6" will be maintained over the existing roadways. A steel repair/strengthening strategy will be included in the demolition and erection plan submitted to VDOT for review and approval prior to proceeding with final design. The steel repair/strengthening strategy will address the stability of the existing bridge members/framework during bridge widening and replacement of the overhang. The Contractor will also perform two in-depth inspections and evaluations of the existing bridge beam/girder framework. The two in-depth inspections and evaluations will determine and document the extent of the deterioration, distress, and repair needs. Existing beams with cover plates and diaphragm connections will be retrofitted if deemed by analysis that the fatigue resistance is governed by Finite Life. Bolted retrofits or Ultrasonic Impact Treatment will be used as deemed appropriate for the type of detail retrofitted. Recommended repairs (high priority, intermediate, and long term) as referenced on page 3 of 21 under the cover of the 2011 Biennial Inspection Report, and in the table below are included as part of this project.

Sanger Avenue Bridge Inspection Report Recommendations (included in Proposal)	
High Priority Repairs	• Upgrade traffic safety features to meet current VDOT standards
Intermediate Repairs	• Repair spalls and reseal expansion joints • Replace missing/broken reflectors on parapets • Repair rusted utility pipe connection and stop leakage

Sanger Avenue Bridge Inspection Report Recommendations (included in Proposal)	
Long Term Repairs	• Seal cracks in the top of the deck • Repair spalled/delaminated areas in the parapets and curbs • Repair spalled/delaminated areas in bottom of deck • Repair spalled/delaminated areas in backwalls • Repair spalled/delaminated areas in breast walls • Clean and repaint superstructure. • Repair vehicular impact damage to Beams 1 to 8 • Clean and spot paint bearings • Replace missing anchor bolt nuts on bearings • Repair potholes and spalls in the approach pavements, approach parapets, and approach curbs • Repair settlement in the shoulders of the HOV approach pavements • Replace missing anchor bolt nuts on railing posts. • Replace missing screws in the utility cover plate on Beam 21 parapet

HOLMES RUN CULVERT

The proposed construction at this location will include the addition of an auxiliary lane and structure mounted sound wall on the I-395 NBL. The proposed roadway widening will be supported by MSE wall with standard VDOT traffic barrier on moment slab. The MSE wall will be designed in accordance with VDOT and AASHTO specifications and requirements. The fill material used in the reinforced zone will be a crushed aggregate with properties in accordance with VDOT's special provisions for approved proprietary MSE walls. The retaining wall will be designed and constructed to accommodate the existing twin culvert and pedestrian tunnel in place. We will perform two in-depth inspections and evaluations of the existing twin culvert and pedestrian tunnel within the proposed roadway widening. The two inspections and evaluations will determine and document the extent of deterioration, distress, and repair needs. The initial inspection will document all distress and damage, evaluate the most appropriate repair strategy, and the proposed repairs to existing structures before completion of the roadway widening. The second in-depth inspection will be performed after retaining wall construction and roadway widening is complete. The second inspection is to confirm that no additional repairs are necessary, and that no sign of additional distress and damage occurred to the existing structures within the roadway widening.

In addition to the scope required in the RFP, the Archer Western/Parsons Team has included the following repairs for the added benefit of VDOT and other users. These repairs include within the proposed roadway widening, (high priority, intermediate, and long term) as referenced on page 3 of 9 under the cover of the 2011 Biennial Inspection Report for Holmes Run Culvert, page 4 of 8 under the cover of the 2009 Biennial Inspection Report for the pedestrian tunnel, and in the table below.

Holmes Run Culvert Inspection Report Recommendations (included in Proposal	
High Priority Repairs	• Upgrade Guardrail to current VDOT standards • Repair Damaged Guardrail
Long Term Repairs	• Seal Cracks and patch spalls in Headwalls • Seal Cracks in wing walls • Repair erosion along wing wall • Remove Overhanging vegetation

Holmes Run Pedestrian Tunnel Inspection Report Recommendations (included in Proposal)	
Intermediate Repairs	• Repair spall at west side headwall

4.

Project Approach

4.4.1 ENVIRONMENTAL MANAGEMENT

The selected design-builder must possess the depth and breadth of experience to efficiently and effectively coordinate, collaborate, and deliver the documented environmental commitments including any needed permit modifications, manage the overall environmental risk during design and construction with the goal of delivering the project on time and without delays caused by environmental issues. Our team offers all of the following proven capabilities, experience and benefits:

1) A strong environmental compliance team that knows how to:
   a. Accurately document existing conditions and convey the data to the design-build team
   b. Walk the talk to communicate with VDOT and regulatory agencies
   c. Correctly process permits, permit modifications and documentation to facilitate and expedite approvals
2) An intrinsic understanding of the Virginia environmental requirements includes:
   a. Knowing how to create, update and maintain a commitment tracking database (CTD)
   b. Knowing why and how commitments are executed
   c. Knowing what and when actions must be executed
3) A proven ability to manage environmental compliance by:
   a. Putting controls in place to keep field operations in compliance at all times
   b. Allocating appropriate resources to construct the project in compliance with commitments
4) A comprehensive environmental awareness and training process that works by
   a. Educating all project personnel on the environmental concerns and risks through an on boarding process for designers and design coordinators and pre-activity meetings before each day or activity in the field to help identify and manage potential environmental risks
   b. Implementing continual reminders and updates
   c. Motivating all project participants to champion the cause
   d. Providing experienced project staff with appropriate Virginia training certifications

Each phase of the project will include environmental awareness to help educate staff, identify, manage, avoid and minimize impacts and risks to environmental resources involved with the project.

Shortly after NTP is given and during the scope validation period, the project corridor will be walked to perform a preconstruction assessment of the project area. This assessment will include verification of the environmental inventory shown in the plans and documentation provided by VDOT. This will result in the creation of an environmental commitment database to track the commitments made including specification and permit conditions and requirements. This database will be used in the environmental reviews of each design package included with each interdisciplinary review of the design packages as they are developed. As discussed in the QA/QC section of this proposal our design process will include the use of issue/discipline specific task forces to help guide the development of the design packages and resolve any major issues throughout the project duration. These task forces will allow for the open and honest discussion of the issues encountered and will allow for a higher quality project as a result. They will also involve ongoing over the shoulder reviews of the designs by a multi-disciplinary group of experts including environmental resource staff. These team members will help review the designs as they are developed with the goal of meeting the commitments contained within the database. Prior to formal submittal of the individual design packages, a formal environmental review will occur along with the multidisciplinary design and construction reviews. Any items found to be in conflict with the commitments will result in comments to be tracked and that must be resolved prior to submittal of the package. This will ensure that all commitments are met and maintained through the design phase of the project.

During the construction phase of the project the staff in the field will be briefed on the environmental aspects of the project and this will be reiterated and detailed further during each pre-activity meeting to ensure all staff working on the project are aware of the environmental risks involved in each on-going activity prior to starting each day's work or individual activity. In addition, prior to any commencement of work in the field, the environmental resources will be identified and marked/flagged whether they are to be protected, temporarily impacted or permanently impacted. Those physically present resources to be protected will be shielded from work through the use of orange construction fencing to further ensure they are not misidentified during construction. In addition, all field QC check lists will include an environmental checking process based on that activity to ensure commitments have not been compromised or additional impacts realized.

Our awareness processes during on boarding and pre-activity meetings are the most important ways to avoid potential environmental risks from occurring. Our processes will emphasize how we will build the project in an environmentally sensitive and safe manner. The training will promote processes that expeditiously and safely resolve environmental emergency. The primary goal of our processes and training is to provide field crews with the tools and techniques to avoid actions that require emergency response. In doing so, environmental and safety risks are dramatically reduced. However, all supervisors will have detailed procedures and guidelines to follow for emergency situations and will have in depth training in such.

Our environmental emergency response procedures are as follows:

1) Incident Occurs
   a. Report the incident immediately
2) Control the Incident and Prevent Escalation of the Issue
   a. Cease the construction activity
   b. Isolate the area
   c. Implement best management practices (absorbent material, brooms, berms)
3) Immediately Mobilize Environmental Team
   a. Categorize and prioritize the level of the incident
   b. Document and quantify any impacts
4) Develop Corrective Action Plan
   a. Develop Root Cause Analysis
   b. Develop Corrective Action Plan to ensure no repeat occurrences
5) Implement Corrective Actions

Furthermore, during the construction phase, we will monitor the National Weather Service to determine if significant weather events, watches or warnings are forecasted. If the forecast warrants, we will review the site and determine what is necessary to prepare the site for the forecast weather event. Immediately after the event, we will review the site to determine needed repairs or E&S maintenance.

4.4.2 UTILITIES

The Archer Western/Parson's Team approach to utility design centers on minimum impact with existing utilities and maximum coordination with utility companies. For example, our horizontal and vertical geometry will be designed while actively coordinating the placement of storm crossings and inlets in order to avoid any other underground conflicts. Where utility relocations are required, we focus on proactive communication to prevent delays and extra costs.

The plans identified ten utilities within the project limits including Virginia American Water, Alexandria Sanitation Authority, Washington Gas, Verizon, FiberLight Inc, LLC, Cox Communications, Level 3 Communications, FiberGate, Inc., Jones Utilities Construction, and Dominion Virginia Power. In addition to these utilities, we will coordinate with VDOT NRO Maintenance and Centurylink regarding VDOT ductbanks. Also, installation of Fiber communications equipment and Gate Control Systems will be coordinated with I-95 Express Lanes project and I-395 Gate System Upgrade Project. Our Utility Manager has already visited the project site, contacted each utility owner, and coordinated the utility relocation plan with the design. We have already created a preliminary utility conflict matrix as shown in Volume II of this technical proposal.

The major impacts and anticipated relocations are as follows:

Utility Owner	Type	Comments/ Notes
Dominion Virginia Power	Underground Electric Duct	Runs entire length of project along Auxiliary and HOV design from beginning of Duke St NB On Ramp to End of Seminary NB Exit Ramp. Will need to be relocated outside the proposed shoulder along the entire project length. Along I-395, there are 52 light poles impacted by the design. These will be replaced by VDOT R&B Standard 40'- LP-1 - 400W luminaires.
	Underground Electric Duct	Crosses Seminary Exit Ramp baseline at 413+02. Set of three lines. Connects to electric hand holes that will be relocated outside the proposed shoulder. Line will need to be extended to connect to the new hand holes.
	Underground Electric Duct	Crosses Seminary Exit Ramp at 409+75, NB Mainline at 335+80 and HOV at 235+95. Will need to be relocated due to widening of Seminary Exit Ramp.
Washington Gas	Gas	Crosses Seminary Exit Ramp at 409+83, NB Mainline at 335+87, and HOV at 236+02. Will need to be relocated due to widening of Seminary Exit Ramp.
Virginia American Water	Water	Crosses Seminary Exit Ramp at 409+97. Will need to be relocated due to widening of Seminary Exit Ramp.
Verizon/AT&T	Telephone/ Fiber Optic	Crosses Seminary Exit Ramp at 410+02. Will need to be relocated due to widening of Seminary Exit Ramp.
VDOT	Fiber Optic Telephone	Runs entire length of project along I-395 NB from Duke St Ramp to End of Seminary Exit Ramp. Will need to be relocated outside the proposed shoulder along the entire project length.
	Fiber Optic Telephone	Crosses Seminary Exit Ramp at 415+12. Will need to be relocated due to widening of Seminary Exit Ramp.

Utility Owner	Type	Comments/ Notes
VDOT	Traffic Control Duct	Crosses Seminary Exit Ramp at 409+31. Does not cross centerline. Runs below resurfaced pavement and between proposed guardrails.. Traffic control boxes will need to be moved inside the proposed shoulders and the line will most likely be shortened to fit inside the proposed geometry.
	Traffic Control	Crosses Seminary Exit Ramp at 415+06. Will need to be relocated due to widening of Seminary Exit Ramp.

Dominion Power's overhead lines cross I-395 at Sta. 282+80 and Sta. 310+40. These lines should meet vertical clearance requirements in the final design and relocation is not likely, but care should be taken during sound wall installation. Alexandria Sanitation Authority's sewer line crosses I-395 at Sta. 292+25, and runs under current interstate alignment. Removal or relocation of this sewer line is not foreseen given the current proposed geometry. In addition to relocating existing VDOT ITS communication which is currently in the existing shoulder, we will provide and install power conduit consisting of two two-inch Department conduits, separate junction boxes, and a new power cable. Power within existing duct bank will be de-energized and safely abandoned per industry standards.

Our approach to Utility Design will be as follows:

- As mentioned in the RFP, our Utility Manager will meet with VDOT's Regional Utilities Office within 45 days of the Date of Commencement to gain a full understanding of what is required with each submittal.
- We will field verify all existing utilities and will perform subsurface utility investigations and test-holes
- We will prepare UT-9 Forms and hold a UFI meeting with each utility
- Our Utility Manager will personally meet with all impacted utilities at required intervals to coordinate designs and relocations
- We will notify each impacted utility in person and in writing of our schedule, design and cost approvals.

Our team has a complete working knowledge of utility relocations and implemented VDOT's Right of Way and Utilities Manual's protocols and standards on several VDOT projects. Further, as a result of our significant design-build experience, our Team has developed close, positive relationships with all of the utilities located within the Project limits which will result in a much collaborative environment for successful completion of the project.

4.4.3 GEOTECHNICAL

Archer Western/ Parsons Team will identify and mitigate geotechnical risks through knowledgeable application of geotechnical design and analysis practices and an integrated team approach to construction methods. The following is the geotechnical approach for the I-395 project:

WORKING IN THE VICINITY OF EXISTING FOUNDATIONS

New foundations are planned adjacent to Sanger Road Bridge and the Holmes Run Culvert. The borings on the as-built plans for the Sanger Road Bridge indicate dense soils and that the existing bridge is supported on spread footings. However the borings provided in the Geotechnical Data Report indicate the presence of loose and soft soils which would not allow for spread footing support of the bridge widening. Additional subsurface explorations used mud rotary drilling techniques to obtain high quality data will be performed to verify which set of subsurface conditions is correct. If soft soils are present, we expect to use rammed aggregate piers to improve the subgrade conditions without the need to drive piles which could cause settlement of the existing bridge. For the Holmes Run Culvert, new embankments are planned above the existing culvert. Careful evaluation of the new embankment and monitoring of the culvert, will be performed. Construction methods will also be used to minimize impacts and reduce ground movements.

MAINTAINING EXISTING STRUCTURES

Based on the RFP documents, the existing HOV shoulders are not full depth pavement. The Geotechnical Data Report also indicates the unimproved shoulders of I-395 should not be used for maintenance of traffic. Our proposed Maintenance of Traffic scheme takes this into account and the phasing is designed so that traffic would not be running on existing shoulders. We will also evaluate the construction traffic patterns to minimize construction traffic on subgrades, nontraffic bearing shoulders, and incomplete new pavement sections. Our evaluation may include performing additional coring, falling weight deflectometer, and CBR testing to confirm the existing pavement sections and subgrade conditions and verify the proposed mill and build up thickness and locations.

MAINTAINING OR RECONSTRUCTING EXISTING SLOPES

Significant portions of I-395 were constructed with embankments. The new widening will require widening of these embankments and construction of retaining walls within the upper portions of the embankments. Typical construction practices often leave loose soils along the face of the embankments. Specific attention will be given to identify where these loose soils are present and remediate them to prevent embankment instability for new walls and slopes. Topsoil placement and landscaping activities tend to loosen the surface soils. Proper dressing (compacting of the surface slopes), and temporary erosion controls will be used to maintain slope stability and prevent excessive sediment runoff and slope stability. Some localized cuts are planned along the southern and northern ends of the widening. Particular attention will be given to identify cuts within the Potomac Clay soils. In general, we do not expect significant amounts of these soils to be encountered in the cuts, but if encountered special testing and analysis will be made to determine their shear strengths and incorporate these lower shear strengths into the design. We will also provide recommendations for temporary slope maintenance to prevent surface water from causing erosion and provided temporary stabilization to prevent slope instability. Our Geotechnical Engineer will visit the site periodically to check slope construction and provide recommendations for additional measures as needed. The quality control team will verify that the new slopes are properly benched into the existing embankments.

ADDITIONAL GEOTECHNICAL RISKS

A primary source of risk occurs during construction when the subsurface conditions encountered are different than those used to form the design or when the geotechnical recommendations are not adequately incorporated in the project plans and specifications. We plan to reduce these risks by the following:

- Verify that the geotechnical and pavement recommendation are properly interpreted and incorporated into the construction documents. This will be accomplished by the geotechnical engineering reviewing the construction documents and verifying that the recommendations have been properly interpreted, and that the Geotechnical Engineer's assumptions which formed the basis of our recommendations are still valid.
- During construction, the Geotechnical Engineer will evaluate the geologic conditions relative to foundation, embankment and pavement subgrades in support of the team's QA responsibilities. The purpose of these evaluations is to document that the construction of the project is performed in accordance with the contract plans and specifications.
- The Geotechnical Engineer will be onsite during preconstruction meetings and key phases of construction, such as initial fill placements, subgrade and slope observations.

4.4.4 QUALITY ASSURANCE/ QUALITY CONTROL (QA/QC)

The Archer Western/Parsons Team includes leaders in the design and construction fields with years of proven performance. As a team and as individuals, we start with the premise that quality should be built into the project rather than checked for and corrected at the end of the project. Simply put, we make quality integral to our engineering and construction practices and procedures.

The proper approach to Quality is especially important in a design-build project. For a successful project outcome, a common understanding and agreement must be reached between the Client and Design-Build team members. We propose implementing informal partnering as a key component of our project management. This partnering attitude will facilitate early mutual agreement and open discussions during the course of the project. A partnering atmosphere will be accomplished through the use of project Task Forces composed of key personnel from of VDOT, Archer Western, and Parsons. Participation of additional entities such as utility and agency representatives will also be encouraged where appropriate. The Task Forces will be open forums for discussion to clearly define project criteria; to meet VDOT requirements; to address constructability, environmental and safety issues; and to provide consistency in design and construction operations – all before they become schedule critical. The task forces will also allow for over-the-shoulder (OTS) reviews of designs and other deliverables prior to formal submittal further ensuring project compliance and quality final products. OTS reviews have been highly regarded on teh I-64/Route 15 Interchange Improvement Design-Build Project in Louisa County.

PROJECT QUALITY MANAGEMENT PLAN

Our QA/QC Plan (Quality Management Plan or QMP) will be compliant with the VDOT Minimum Requirements for Quality Assurance & Quality Control on Design Build and Public-Private Transportation Act Projects, January 2012 (VDOT Quality Requirements). At a minimum, the QMP will include:

- List of designers, contractors, utilities, and relevant agencies with a contact person, telephone, and fax numbers, and e-mail addresses
- Team hierarchy and delineation of the lines of communication
- Identification of key individuals and responsibilities
- Protocols for design verification and certification needed prior to releasing for construction
- Guidelines for construction inspection, testing, sampling, and documentation including identification of all quality activities that require specific training or certifications
- Sample Quality provisions for inclusion in subcontracts and purchase orders
- Guidelines for acceptance of work and certification for payment
- Procedures for dealing with non-conforming work

The implementation of the Quality Management Plan will be overseen by Ali Abdolahi PE CCM, an experienced QAM who has worked on multiple VDOT projects. The Design Quality Manager and the Construction Quality Manager are the primary project management personnel who will support and supplement his efforts. Reporting to the Design Build Project Manager Brian Quinlan PE, Ali will communicate directly with VDOT and be responsible for the development of and adherence to the QMP. In order to fulfill this role, he will have full authority to halt out-of-control operations and to direct the removal of non-compliant work. The QAM will have the necessary resources to fulfill these responsibilities, including an inspection team typically consisting at a minimum of a lead inspector, two structures inspectors, and a civil inspector, an independent testing laboratory, and independent certified inspectors as needed for verification testing. Using Appendices 2 and 3 of the VDOT Quality Requirements, he will draw on his extensive VDOT experience to structure project recordkeeping and inspection to reflect and satisfy VDOT protocols so that VDOT can confidently rely on his certifications that all work has been completed in conformance with the approved QMP, the construction documents, and the Contract.

DESIGN QUALITY MANAGEMENT

Parsons is ISO 9001:2008 certified. In fact, Parsons was the first engineering consultant to receive this certification. In order to be certified, Parsons developed and implemented stringent company-wide procedures to deliver quality, which is defined as “conformance to requirements”. Key aspects of these procedures are proactive measures for problem prevention, a performance standard of zero defects, and documentation and prompt remediation of nonconformance as a means of systematically measuring and improving quality.

At the project level, the Design Quality Plan implemented by Parsons will be structured on the following tenets:

- Quality is achieved by making individuals responsible for the quality of their work so that they perform work functions carefully, thoughtfully, and with innovation.
- Quality is controlled by adequate planning, coordination, supervision, and technical direction; proper definition of job requirements and procedures; and the use of appropriately skilled personnel.
- Quality is assured by assigning an independent manager to perform Quality Assurance functions consisting of surveillance and auditing of the work and of the procedures followed when performing the work.
- Quality is best verified by individuals who are not directly responsible for performing the initial work activity; and it requires formal documentation of the findings of the reviewing, checking, and surveillance effort.

In addition to Parsons staff, all design subconsultants will be required to follow these same procedures as documented in the Design Quality Control Plan.

DESIGN QUALITY STAFFING

Reporting to the Design Build Project Manager, Design Manager Josh Wade PE has overall responsibility for implementation of the Design Quality Plan. In doing so, he will rely extensively on the Design Quality Manager (DQM) Greg Anderson PE. Greg served in the same role on the ICC Contract B project and is currently serving in the same capacity on the I-64/Route 15 Interchange Project for VDOT. As with each of those project, Greg is responsible for Design Quality Control including the development of the Design Quality Plan.

A Civil Engineer with over 30 years of experience, Greg’s primary project responsibility as DQM will be to assure that quality control procedures are followed. He will also have responsibility for:

- Program quality documentation
- Timely Quality reports to the Design Manager and the Parsons Principal-in-Charge
- Design Certification for compliance with the approved quality program

Greg will ensure that Parsons QA/QC procedures are followed by tracking and reviewing the compliance of design QC recordkeeping. As part of this process, all QC findings must be cleared prior to submitting design documents to the owner for review and to the contractor for construction, which includes a written approval form certifying that the DQM has audited and approved the submittal. Greg will also be responsible to coordinate external QC checks by seasoned design professionals that are not assigned to the project, ensuring that an "independent set of eyes" provides a fresh look at documents. Greg is very familiar with his role and well understands the importance of robust peer review, as he is also the Quality Assurance Engineering Director for Parsons.

DESIGN QUALITY PROCEDURES

Parsons will implement a multi-level Design Quality Control Plan that includes the following:

- Written documentation and definition of Design Standards, Processes, and Procedures in advance of initiating design
- Independent detailed checks of all design reports, calculations, drawings and specifications
- Interdisciplinary reviews by engineers and project management staff to provide coordination and uniformity in design drawings and documents that clearly identify requirements and design intent
- Routine constructability reviews to ensure contractor input early in the design process and to facilitate planning of construction activities
- Technical Coordination Reviews and Documentation Coordination Reviews at milestone points in the design process
- Design Quality audits under the direction of the Design Quality Manager to assure that quality control processes are followed and that required checking and reviews are performed
- Completion of a Certification of Conformance sign off form for each design submittal verifying conformance with the Design Quality Control Plan

The procedures will also include an initial environmental quality review to ensure all environmental commitments are met (refer to Section 4.4.1 for more information), an interdisciplinary review to minimize conflicts and rework and ensure overall quality, and constructability reviews to ensure the designs are buildable and they meet the needs and requirements of the construction team. These steps will be outlined in the QMP, and documented and enforced through the Design Quality Manager.

Our Design Quality Plan will ensure that the design documents released for construction meet all professional and contractual project requirements. Procedurally, this requires that every construction document be audited by the DQM prior to receiving Released for Construction approval by the Design Manager. As a prerequisite for that audit, we will achieve document consistency by applying common standards, procedures, and design processes on a team-wide basis. This means having an established format for specifications and drawings, including such mundane things as standard symbols, line weights, noting and dimensioning methods, detail and sheet numbering, titling standards, and information content checklists. One area of particular emphasis in the maintenance of consistency will be in document control. In the design build environment, interim drawings are distributed for a variety of purposes. For that reason, it is imperative that in-progress drawings are title blocked with revisions noted at all times and that no drawings are used in the field until they are formally Released for Construction.

CONSTRUCTION QUALITY MANAGEMENT

The mission statement for The Walsh Group includes a commitment "to set the highest standards for quality and safety." To achieve that goal, Archer Western as a member of The Walsh Group has developed a comprehensive six-step approach to quality, with multiple processes contained within those steps. The diagram on the right graphically depicts our quality control program, which promotes a total commitment to quality from top management to craft workers and subcontractors. Reflecting this commitment, our project teams produce the highest quality finished product while simultaneously reducing overall cost by minimizing costly "rework". This achievement is accomplished by making Quality the responsibility of every team member and by using proven checks and balances throughout the course of the project to ensure a systematic approach to quality. These systems are used on all Archer Western projects and are formalized in a written job-specific Quality Control Plan (QCP). These QCPs include items such as:

- Adoption of and compliance with the QCP by all subcontractors as a condition of working on the project
- Development of Task Specific Work Plans
- Detailed coordination and review of shop drawings to ensure the procurement of the proper materials, ensure proper fit, ensure coordination of shop drawings across multiple disciplines, and identify any deviations from the contract requirements
- Pre-Activity/Pre-Construction meetings to review specifications, approved submittals and quality expectations for each segment of the work (These meetings include Archer Western personnel, the associated subcontractor, and project inspectors. For this project, they also include Parsons and VDOT, if so desired.)
- Regular quality control testing, as well as quality assurance testing when specified such as on this project, to ensure quality of the developing project
- Oversight and review of the work as it is put into place (This includes such items as pre-placement checks prior to concrete placements, inspection of underground pipe installations prior to backfill operations; verification of materials/equipment against approved submittals, etc.)
- Tracking and resolution of quality issues (This is essential to ensure the work does not continue to be built over potentially substandard construction.)

CONSTRUCTION QUALITY STAFFING

As noted at the beginning of this section, the Quality staff for this project includes an independent QAM and QA inspection staff to perform verification (emphasis added) inspection and testing. Therefore, since the emphasis of the QA staff is on verification, then the direct responsibility for Quality lies with the construction forces, as is fitting. Accordingly, Archer Western, which routinely designates a QC Manager for each of its projects, will have a full time QC Manager on this project because of its scope and complexity. That QC Manager will be Stefan Pustam, a degreed engineer who performed the same role in a recently completed MWAA project at National Airport. Stefan is well acquainted with the requirements of the position, including how to prepare, conduct, and document preparatory meetings, initial inspections, and follow-up activities. He will promote the active participation of superintendents, engineers, and foremen in the QC effort, as well as supervising the activities of certified field and lab technicians where appropriate. While it is anticipated that most of the QC efforts will be performed by production personnel, it is also anticipated

that certain specialty tasks such as concrete testing and various compaction testing will be performed by dedicated personnel due to certification requirements and time demands

Also noteworthy in terms of staffing, in addition to Stefan and the Construction Manager Andy Palahnuk, the project staff will include a number of other personnel with Virginia RLD, ESCCC and MOT certifications.

CONSTRUCTION QUALITY PROCEDURES

AWC uses a wide array of quality control methods during construction including constructability reviews, work plans, 3-Phase controls, and employee training.

- *Constructability Reviews* - Regular constructability and design reviews are performed during the design phase. Most reviews occur during coordination meetings. For faster responses, details are distributed electronically or by courier, as needed. In addition, conference calls and face to face meetings are used to discuss the distributed information.
- *Work Plans* - For every major construction activity, a Work Plan is developed by the superintendent and engineer that are involved in the operation. The draft plan is then expanded to incorporate feedback from the Construction Manager, the Senior Site Superintendent, the Site Safety Officer, and the QC Manager, et al. As the Work Plan nears completion, the crew that performs the activity in question is brought in to provide their input and to familiarize them with the plan. The Work Plan details significant aspects of the construction activity including materials, equipment, crew size and composition, special training requirements, QC concerns, tolerances, material testing requirements, and other pertinent information. In addition to the obvious benefit of highlighting and addressing areas of concern prior to actually starting work, a key goal of the Work Plan is to maximize team participation so that they "buy in" to the process.
- *Three Phase Control* – The basic steps are the Preparatory Meeting where the upcoming task is reviewed to ensure all submittals are in place, all tools, equipment, and materials or on hand, and proper planning for Means and Methods has occurred. The next step is the Initial Inspection where the early stages of the work are inspected to ensure contract compliance and establish benchmark performance criteria. The final step is the Follow-Up Inspection to verify ongoing compliance and accept completed work.

- *Personnel Orientation and Training* - Each person working on the project receives an orientation and training on the main areas of emphasis for this project including safety, quality, environmental commitments, and team work. The idea is to instill a "team approach" and ensure that everyone is fully engaged in the process. Training classes are provided or made available for various topics including QC courses, equipment operator classes, safety and first aid training, maintenance of traffic (MOT) training, environmental training, and small tools training. For example, a goal of the Archer Western Safety Program is that all employees receive 10-Hour OSHA training. Another example is that that Archer Western conducts internal training and certification of all equipment operators, especially crane operators.

UNIQUE ELEMENT DURING DESIGN AND CONSTRUCTION

A notable unique element on this project is the design and construction of the interface between the new HOV Ramp and the Seminary Road Bridge.

One particular element of design that we consider unique and critical to the overall success of the project is the Seminary Road superstructure replacement and the HOV Ramp tie-in. The proposed superstructure replacement for the Seminary Road bridge will consist of a composite, continuous, curved steel plate-girder superstructure. Additionally, the last span of the HOV Ramp will consist of a steel beam span that will frame directly into the proposed Seminary Road superstructure to accommodate a jointless interface. The curved girder superstructure of the Seminary Road bridge will be supported by the existing bridge hammerhead-type piers with the existing concrete pedestals removed and replaced to accommodate the new superstructure. Additionally, construction of the new superstructure will be staged to comply with the provisions of Section 2.11, Transportation Management Plan. Therefore, each stage of the superstructure replacement process will require individual design analysis to verify stability and conformance to AASHTO and VDOT design codes and standards, and to ensure that the bridge's performance and maintenance are optimized for a 75-year service life.

The designers will need to address the complexity of this structure in each construction stage by careful selection of the design process, the accompanying design software, and the development of an accurate and constructible bridge model. We will specifically address this complex task by assigning qualified individuals to perform each role in the Parsons QA/QC process. Specifically, this process will consist of the following:

- Design Origination – Selection of the design engineer to originate the design and detailing of all stages of the design process is a critical step in the QAQC process. The Originator is the qualified individual responsible for the development of the design in its original form. The Parsons Team will assign a qualified engineer with specific experience in the staged construction of complex, curved steel girder bridges. The assumptions, proposed software and processes will be reviewed as part of the QC process prior to commencement of the detailed design.
- Design Checking – A qualified engineer, independent of the design team, will be assigned to perform the checking of the originator's design, independently verifying that the originator's work meets all project requirements. As with the Originator, the assigned Checker will have specific experience in similar staged design. Each step of the design process will go through the QC process and review prior to beginning the next phase or step.
- To further ensure a quality design, the Parsons Team proposes to have the design Reviewed by a third-party not otherwise involved in the design process. The Reviewer will view the project from a global perspective and will see the design as it fits into the overall project. For example, the Reviewer may verify conformance of the design with other disciplines and project criteria, such as the Traffic Management Plan. This review will be completed at the same points as the interdisciplinary, environmental and constructability reviews which are all intended to increase quality, reduce conflicts and ensure conformance

The connection of the HOV Ramp and Seminary Road Bridge also creates construction challenges. The first is a rather straightforward construction schedule requirement that Pier 9 on the HOV Ramp needs to be constructed concurrent with fabrication of structural steel so that the pier is in place to accommodate structural steel erection. Erection of the structural steel is also a rather straightforward construction operation assuming proper fabrication, although there will be significantly more fit-up and bolting required for the rigid connection detail where the HOV beams tie to directly to the Seminary fascia beam and indirectly through to the first interior girder. Installation and QC procedures for this unique element are described below:

- The connection between the HOV ramp steel rolled beams and the outside (fascia) beam of the Seminary Road bridge will be a full-depth rigid connection. The rolled beam of the HOV Ramp span will be fitted at the interface with Seminary Road bridge with a bolster to make the beam depth equal to the girder depth. The top flange splice will need to be installed with the Seminary Road girders and fully tightened to the girders. Our QC Manager in concert with the QAM and structural engineer will inspect the installation and use a signoff sheet documenting the bolts were tightened.

- All connection bolts of the HOV Ramp beam connection to the splice plates at the Seminary Road bridge fascia girder will be made with (longitudinal) slotted holes and the bolts hand-tightened. The final design may determine that only a portion of the connection bolts will be installed at this time to the web and possibly the flanges. The QC Manager in concert with the QAM and structural engineer will inspect the installation and use a signoff sheet to document that the bolts were properly installed.
- The HOV Ramp steel beam span concrete deck will then be cast up to the Seminary Road bridge with the last 5-ft at the interface left out of the pour. Pre-pour inspections using signoff sheets will be conducted first by the Superintendent followed by the QC Manager, structural engineer and QAM. Upon acceptance the concrete placement will occur.
- After the placement has attained strength the remaining bolts will be added and tightened at all web and flange connections. Once completed the QC Manager along with the structural engineer and QAM will make the final inspection and use signoff sheets to document their findings.

4.4.5 COORDINATION WITH THIRD PARTIES

The success of the I-395 project rests on stakeholder buy-in. If the stakeholders perceive the project as a disjointed, perplexing, community hindrance, then the project is the target of negative publicity and public rejection, even when designed and constructed soundly. There are several other projects that will be executed simultaneously, such as I-495 HOT Lanes Project, I-95 HOV/HOT Lanes also know as 95 Express Lane Project, I-95 HOV/HOT Ramp at Fort Belvoir North (DAR), Department of Rail and Public Transportation Transit Improvements, VDOT Repair and Preventative Maintenance Contracts, Short and Mid-Term improvements at Seminary Road (Eastern Federal Lands), I-395 Eads Street Ramp, NRO I-395 Gate Control System (GCS) Upgrade project, Upgrade Overhead Guide Signs, and the Beauregard Corridor project. Coordination with these projects is extremely important to maintain the project schedule and minimize impacts to traffic operations. Archer Western/Parsons Team promises a contact person for third parties, John Undeland, who would provide accurate and timely information to all these stakeholders. John Undeland, is an established public involvement leader for complex VDOT projects throughout Northern Virginia.

We will kickstart the project by developing a comprehensive communication plan which includes key persons and contact details for all these stakeholders. Our staff thoroughly understands local concerns and has a good working relationship with VDOT and the City of Alexandria.

We will provide written information about project overview, plan of work, overall project schedule, potential impacts to traffic, potential impacts, up–to-date project photos, and contact information to VDOT's Northern Virginia District Office of Public Affairs, Virginia Megaprojects Office (VMO) and the City of Alexandria on a periodic basis and at key milestones. We will attend scheduled Mega Projects Coordination Meetings as necessary to fully coordinate the work communicate intermediate commitments and benchmarks with other contractors. We will provide written documentation to VMO about our planned operations, haul routes, utility relocations, lane closure schedules, changes in traffic pattern, shop drawing submittals and sample material reviews

We believe that BRAC 133 Advisory Group is an avenue to reach wide group of stakeholders including elected officials, government agencies, and private entities like the Hilton, the Alexandria Professional Center, Hammond Middle School, Southern Towers, Seminary Towers, and, to a lesser degree, Landmark Mall. We will make sure we provide enough information to BRAC 133 Advisory group and coordinate information through the VMO.

5.

Project Construction

4.5.1 SEQUENCE OF CONSTRUCTION

Construction activities occur along two essentially perpendicular corridors, the "north-south" I-395 corridor and the "east-west" Seminary Road corridor. The two are distinct from each other except at the interface of the new HOV Ramp and the existing Seminary Road Bridge, so independent phasing will be provided for each.

CONSTRUCTION PHASING

The predominant feature of the phasing on I-395 is the establishment of the long term work zone for the construction of the General Purpose widening from Duke Street to Seminary Road. This work zone will be set up early in the project, then remain in place for an extended period to accommodate widening of the Duke Street on-ramp, the widening of I-395, and the widening of the Seminary Road General Purpose (GP) off-ramp. In addition to the roadwork associated with the widening, this work zone will also accommodate the widening of the northbound Sanger Avenue Bridge, four retaining walls, two sound walls, highway lighting, new sign structure locations, and relocation of utilities impacted by the widening of the Seminary Road GP off-ramp. This work zone will also be used to facilitate night time lane closures for reconstruction of the northbound General Purpose outer shoulder. Roadwork restoration in and adjacent to this work zone will generally progress north to south in order to expedite full development of a separate work zone for construction of the new HOV Ramp and widening the northbound General Purpose inner shoulder. The work zone for this ramp itself will be established early in the job, but only to the extent permitted by the current roadway footprint. However, as work in and around the outer shoulder work zone progresses north to south, this will eventually allow establishment of the entire work zone needed for ramp construction and shoulder widening. Similar to the approach used to upgrade the outer General Purpose shoulder, the HOV work zone will also be used to sortie crews to upgrade HOV roadway shoulders. And finally, a long term work zone will also be established on the southbound side for the construction of two sound walls and the widening of the southbound Sanger Avenue Bridge. This work zone will only encroach on the southbound General Purpose roadway in the vicinity of Sanger Avenue, and then only to a very limited extent.

The second corridor of construction activities will be defined by the Seminary Road Bridge construction activities. Reconstruction of this bridge will occur in three phases, plus satellite operations for installation of a new pedestrian bridge. The first work zone on Seminary Road will allow reconstruction of the southern 1/3 of the bridge, which must be coordinated with construction of the northernmost span of the new HOV ramp. Concurrent with work on the southern 1/3 of Seminary, pedestrian bridge construction just north of Seminary will require relatively short term work zones for construction of the piers, abutments, and approaches. The pedestrian bridge superstructure will be prefabricated, so the erection work will only require short term lane closures. The second Seminary work zone will accommodate reconstruction of the northern 1/3, which can only take place once pedestrian traffic is relocated to the new pedestrian bridge. And finally the third Seminary work zone will accommodate reconstruction of the middle 1/3 of the bridge.

Our goal in developing this phasing sequence was to minimize traffic shifts, minimize temporary lane closures, and maximize the amount of work done in long term work zones. It is our experience that this approach produces the safest environment for both the traveling public and our workers. Furthermore, we will meet the 9/24/15 Interim Milestone and the 12/18/15 Substantial/Final Completion Milestone because of the inherent efficiency gains that come from working in an established work zone to the maximum extent possible.

This effort was successful as northbound traffic in the I-395 General Purpose lanes will not be physically affected by the long term work zone for the widening, although the on-ramp traffic at Duke Street will need to more quickly converged into a single lane and the off-ramp traffic at Seminary Road will lose some storage capacity. The first of two minor lane shifts that the northbound traffic will face will be in the latter half of the project when traffic is shifted slightly eastward to accommodate upgrading the existing inner General Purpose Shoulder, which of course will shortly thereafter be followed by the ultimate shift back

into the Final Condition. Similarly, the southbound General Purpose traffic will only encounter a relatively short term contraction to 11-foot lane widths for superstructure widening and sound wall installation at the Sanger Avenue Bridge. Of course, there will still be unavoidable nighttime lane closures for activities such as transitional MOT activities, mill and overlay activities, NB I-395 GP outer shoulder upgrades, pedestrian bridge superstructure installation, and Seminary Road Bridge superstructure replacement.

There is no need to shift HOV lanes to accommodate construction, so for HOV traffic the construction effort will be generally transparent. Impacts will be limited to nighttime and weekend lane closures for transitional MOT activities, mill and overlay activities, shoulder upgrades, pedestrian bridge superstructure installation, and Seminary Road Bridge superstructure replacement.

Finally, local traffic on Seminary Road will experience traffic switches for each of the three superstructure replacement phases. There will also be nighttime lane closures for transitional MOT activities, superstructure demolition, and superstructure replacement. The northern half of the rotary will also experience some nighttime closure for demolition and erection of pedestrian bridge superstructure elements. Pedestrian movements will be the least impacted by construction of the new bridge, and that impact will only be positive. Pedestrians will remain in their current footpath until the new expressway crossing is in place, they will then be shifted onto the new bridge. Within this process, the approaches will be updated a half at a time, so there will be periods when the approach width will be five to seven feet wide, similar to the existing bridge and at-grade sidewalks. This approach eliminates any confusing or inconvenient rerouting.

GEOTECHNICAL CONSTRAINTS

Geotechnical considerations are not expected to be a major consideration on this project. There is extensive pre-existing information that addresses the Seminary Road Bridge, pedestrian bridge, and HOV Ramp; so those bridge structures will require geotechnical sampling for confirmation purposes only. The Sanger Avenue Bridge is noteworthy only in that recent borings related to the widening do not agree with as-built information for the existing bridge. We will resolve this discrepancy with additional borings, prior to selecting the appropriate foundation type. If our testing confirms the findings other recent borings, then we will perform deep ground stabilization prior to footing construction. In addition, sound wall foundations, retaining walls, and slope stability will also receive attention from our Geotech professionals to address routine design considerations.

ENVIRONMENTAL IMPACTS

No significant environmental issues are expected on this project because dealing with runoff from the impermeable area is not problematic. In fact, the most noteworthy aspect of construction will probably be the selection of plantings to ensure slope stability adjacent to the northbound General Purpose widening. Another minor issue will be dealing with the runoff from the Seminary Road Bridge and HOV Ramp, but this is simply a matter of finalizing an economical conveyance scheme.

RIGHT OF WAY ACQUISITION

The only new ROW needed for this project is the ROW that VDOT has identified as necessary for widening the pedestrian bridge abutment on the west side. This ROW acquisition must be expedited so as not to delay a 2014 switch from Phase 1 to Phase 2 on Seminary Road, the purpose of which is reconstruction of the northern 1/3 of the deck. This ROW acquisition should include a temporary easement to provide a suitable work zone for construction of the abutments and approaches, plus upgrades to the superstructure of the two existing spans alongside the parking lot of Seminary Towers.

STAGING AND STORAGE AREAS

This project will likely have a storefront office, so there will not be an onsite trailer compound. If needed, we will secure a small (~2 acres) offsite storage area although we do not think it will be necessary. Instead,

we intend for the work zones for the northbound widening, the southbound sound walls, and the HOV Ramp to provide the necessary I-395 staging and storage areas. Similarly, the work zones for the Seminary Road Bridge will provide a staging and storage area for the superstructure replacement and new pedestrian bridge.

PUBLIC INVOLVEMENT/STAKEHOLDER COORDINATION AND GOVERNMENT APPROVALS

Our Traffic Management Plan specifically addresses public involvement, but one courtesy we will extend is to invite the management, workers, and residents of The Mark Center, Seminary Towers, and Southern Towers to monthly coordination meetings. Similarly, weekly coordination meetings will be requested with EFLHD and Cherry Hill Construction (the EFLHD contractor for the Short Term Mark Center Improvements project).

MAXIMIZING THE PROBABILITY OF ANTICIPATING AND MITIGATING ANY POTENTIAL DELAYS TO CONSTRUCTION

The emphasis on long term I-395 work zones serves several purposes, including providing significant flexibility in the scheduling and execution of work activities. For example, we will be able to adjust planning as necessary to overcome unforeseen delays because we will have extended work areas and we will have access to multiple available work operations. So if problems occur, we will not lose momentum, but rather shift our current focus elsewhere while the unforeseen problem is remedied.

On Seminary Road, we have elected to mitigate potential delays **by replacing the structural steel** instead of rehabilitating it. We foresaw the rehabilitation process as unpredictable both because it was focused on labor intensive activities like bearing replacement, stripping and repainting, fatigue-mitigating upgrades, and structural steel repairs and because it greatly complicated the connection of the new HOV Ramp to the existing bridge.

On the pedestrian bridge, we have elected to drive micro-piles through the footing of an existing retaining wall at Pier 2. We will do this from the surface, using a downhole hammer to penetrate the footing. Our design will include sufficient redundancy so that if a micro-pile is blocked by an existing retaining wall pile, then it can be abandoned. This is something unlikely to occur because the wall pile is widely spaced at the back edge of the retaining wall footing. This approach eliminated the need for excavating a pit to access the footing, and any demolition of the footing.

On the Seminary Road GP off ramp, we are prepared to relocate all existing utilities to accommodate the ramp widening. We intend to do this by providing drop manholes or vertical connections behind the new retaining wall on the east side of the ramp, meaning that the utilities be extended horizontally beneath the roadway to this vertical offset.

4.5.2 TRANSPORTATION MANAGEMENT PLAN

One of the primary goals for a successful I-395 HOV project is the efficient handling of traffic through and around construction, giving utmost importance to safety of the motorists, pedestrians, workers, and inspectors. We will prepare a comprehensive “Type B” Category III Transportation Management Plan (TMP) and site-specific Temporary Traffic Control Plans (TTCP) consistent with VDOT’s IIM-241.5 (Work Zone Safety and Mobility) and TE 351 (Work Zone Speed Analysis) requirements. 29

Archer Western/Parsons’ TMP goals are to:

- Promote efficient and effective construction phasing and staging to minimize contract duration and control costs.
- Improve work zone safety for construction workers and the traveling public.

- Improve public awareness and minimize complaints from the traveling public and local businesses and communities.
- Improve intra- and inter-agency coordination.

Our design staff consists of traffic control design specialists certified by VDOT and the American Traffic Safety Services Association (ATSSA). During the construction phase, we will hold regular meetings with VDOT personnel, the Virginia MegaProjects Office (VMO), adjacent contracts, the Mark Center task force, and other interested abutters, to monitor traffic patterns. Our TMP will include well coordinated TTCPs, proactive Public information and Outreach Plan, and Effective Operational Strategies that will minimize impact all identified stakeholders and other I-395 commuters.

TEMPORARY TRAFFIC CONTROL

Our Team will develop and implement Temporary Traffic Control Plans (TTCP) in accordance to VA Supplement to the 2009 MUTCD and VA Work Area Protection Manual. Temporary lane closures to facilitate construction will be limited to off-peak hours per RFP requirements (and approved as part of our TMP). Our Team does not anticipate the need for regulatory speed reductions through the work zone, as all geometry and lane shifts will be designed to meet minimum standards mentioned in the RFP. We are committed to maintaining all existing travel lanes with at least 12' lane width on I-395 and 11' lane width on all other roadways during construction. A minimum shy distance of two (2) feet will be maintained between traffic lane and Concrete Traffic Barrier Service or Group II Channelizing Devices on I-395, while a minimum shy distance of one (1) foot will be provided on all other roadways. On Seminary Road, minimum of 3 lanes will be maintained at all times. Our team performed a traffic analysis for Seminary Road traffic operations and the results show that maintaining three lanes on Seminary Road has similar LOS and queues as having two lanes in both directions. Based on our preliminary findings, there is very minimum impact in queue lengths if we close one lane eastbound. A thorough work zone traffic analysis will be performed using analysis software such as VISSIM, Quick Zone and HCS+ for different traffic patterns including lane closures to evaluate the impacts and will be included in the TMP for VDOT's approval. Long-term detours are not anticipated for this project instead, temporary 15 minute night time closures will be utilized with police assistance for beam erection on Seminary Road and Pedestrian Bridge installation.

PUBLIC INFORMATION AND OUTREACH

We will deploy a proactive communications and outreach plan to support the traffic management program for this project. The following strategies will be followed for successful public outreach for this project:

- Portable Changeable Message Signs ("PCMS's") will be provided in advance of the work zone when changing traffic patterns within the project limits. Northern Region Traffic Operations Center ("TOC") will be able to remotely control these PCMSs to facilitate emergency access during an incident.
- Advance notification will be provided to VDOT, Northwest Regional Traffic Operations (NWRO), and 511 Virginia
- The TMP strategies will be coordinated with the Virginia Megaprojects Office (VMO), the 95 Express Lanes project, and other local construction projects.

OPERATIONAL STRATEGIES

The Archer Western/Parsons team will develop Transportation Operations Strategies to manage work zone traffic operations including monitoring traffic conditions and making adjustments to traffic operations based on changing conditions. The goal of these strategies will be to improve detection, verification, and response and clearance of crashes and other incidents in the work zone and along the project corridor. The following strategies will be used on a daily basis for oversight and evaluation purposes:

- Lane closure requests will be submitted to the VMO in accordance with the VMP Lane Closure Policies and Procedures. All lane closure hours, and special event days will be in accordance with the RFP
- Virginia State Police (VSP) presence will be requested during critical times such as lane closures and shifts.
- Work activities within the construction work zone would not commence until the approved traffic control devices are in place in accordance with the approved traffic control plan.
- An inspector trained in traffic control would be assigned to monitor the approved traffic control plan and recommend changes.
- Complete records of the management of the TCP would be maintained that include: when specific traffic control devices are placed and removed; when contract work activities were completed; inspection time, date and findings.
- Traffic crashes and injuries that occur within a construction work zone would be documented and reported to the Construction Engineer and VDOT Safety Coordinator.

CONTINGENCY PLAN

We will prepare a contingency plan that addresses incident management during construction. The plan will identify ways to minimize traffic impacts when unexpected events occur in the work zone (e.g., crashes, unforeseen traffic demand, inclement weather, etc.). The following will be maintained for this project:

- A decision matrix with lines of communication and authority for use when unexpected events occur in the work zone.
- Names, phone numbers, and email addresses of TMP Managers, Resident Engineers, maintenance supervisors, law enforcement commanders, local agency representatives, etc., would be accessible to the personnel working on site.
- A detailed contingency plan will be prepared for reopening closures to traffic.

6.

Proposal Schedule

in association with

PARSONS

SCHEDULE

I-395 HOV RAMP AT SEMINARY ROAD AND I-395 NB AUXILIARY LANE EXTENSION

7.

DBE Commitment

4.7 DISADVANTAGED BUSINESS ENTERPRISE (DBE)

DBE PARTICIPATION

Archer Western will provide subcontracting and purchasing opportunities to local DBE firms to meet or exceed VDOT's established goal of **20% DBE.** For this project, the Archer Western Team will reach or surpass the established DBE goal by using services from DBE team members such as Accompong Engineering Group LLC; Athavale, Lystad & Associates, Inc.; Endesco, Inc.; and Sabra, Wang & Associates, Inc. Archer Western and Parsons have extensive prior experience working with each of these firms and their staff, which provides us with confidence in, and knowledge of, their capabilities, allowing us to successfully integrate them into the team and maximize their utilization on this project. Construction DBE partners will be selected as scopes are refined during the design process. Typical opportunities include furnish and install reinforcing steel, structural steel, trucking, landscaping, pavement markings, guardrail, erosion control measures, and storm drainage system work.

DBE SUBCONTRACTING NARRATIVE

Since we have been working in the local area for over 20 years, we have established strong working relationships with many local DBE firms. We have built these strong relationships through the combined efforts of all parties. We have been successful in meeting or exceeding the DBE goals for the projects we have completed for multiple agencies and owners throughout the region.

Efforts are made to ensure procurement packages are structured to allow all types of disadvantaged business concerns to participate to the maximum extent possible. Bid invitations and other documents are reviewed to eliminate statements or clauses which may restrict or prohibit disadvantaged business participation. In addition, favorable payment terms and bonding requirements are often provided.

ASSISTANCE PROGRAMS AND OUTREACH TO DBE FIRMS

In addition to the composition of our team, we anticipate that there will be additional subcontract opportunities placed with disadvantaged business concerns qualified as DBE contractors following award. Our outreach efforts during the preconstruction phase will continue throughout the entire project. These on-going efforts will include, but are not limited to:

- Encouraging DBEs to attend VDOT sponsored networking/informational outreach meetings and Archer Western hosted meetings to provide adequate information about the requirements.
- Directly contacting DBE firms by phone, fax and email, and mail about contracting opportunities using Archer Western's bidder database and VDOT's qualification list.
- Partnering with DBE trade/professional associations, local chambers, and community organizations to deliver project information about upcoming contracting opportunities.
- Advertising solicitations using a variety of local media targeting disadvantaged community-concentrated audiences
- Inviting DBE's to review project documents and ask questions concerning potential scopes of work.
- Coordinating and providing technical assistance to enhance the capacity and capability of DBE firms. Methods to accomplish this may include breaking work components into smaller packages to assist the smaller firms.
- Facilitating the cash flow schedule of DBE subcontractors and suppliers through early payment on mobilization items, waived retainage on labor-only subcontracts, or joint checks to subcontractors who are unable to obtain sufficient credit.

During the design phase and the procurement process, workshops or one-on-one meetings may be conducted to provide DBE subcontractors/suppliers direct support and additional encouragement to participate in the bidding process.

8.

Appendices

Acknowledgement of Addenda

Form C-78-RFP

ATTACHMENT 3.6

COMMONWEALTH OF VIRGINIA
DEPARTMENT OF TRANSPORTATION

RFP NO. C00096261DB50

PROJECT NO.: 0395-100-722, 0395-100-736

ACKNOWLEDGEMENT OF RFP, REVISION AND/OR ADDENDA

Acknowledgement shall be made of receipt of the Request for Proposals (RFP) and/or any and all revisions and/or addenda pertaining to the above designated project which are issued by the Department prior to the Letter of Submittal submission date shown herein. Failure to include this acknowledgement in the Letter of Submittal may result in the rejection of your proposal.

By signing this Attachment 3.6, the Offeror acknowledges receipt of the RFP and/or following revisions and/or addenda to the RFP for the above designated project which were issued under cover letter(s) of the date(s) shown hereon:

1. Cover letter of August 15, 2012 – RFP
   (Date)
2. Cover letter of November 5, 2012 – Addendum #1
   (Date)
3. Cover letter of December 14, 2012 – Addendum #2
   (Date)
4. Cover letter of December 20, 2012 – Addendum #3
   (Date)

SIGNATURE

12/20/2012
DATE

David B. Casey, Vice President
PRINTED NAME AND TITLE

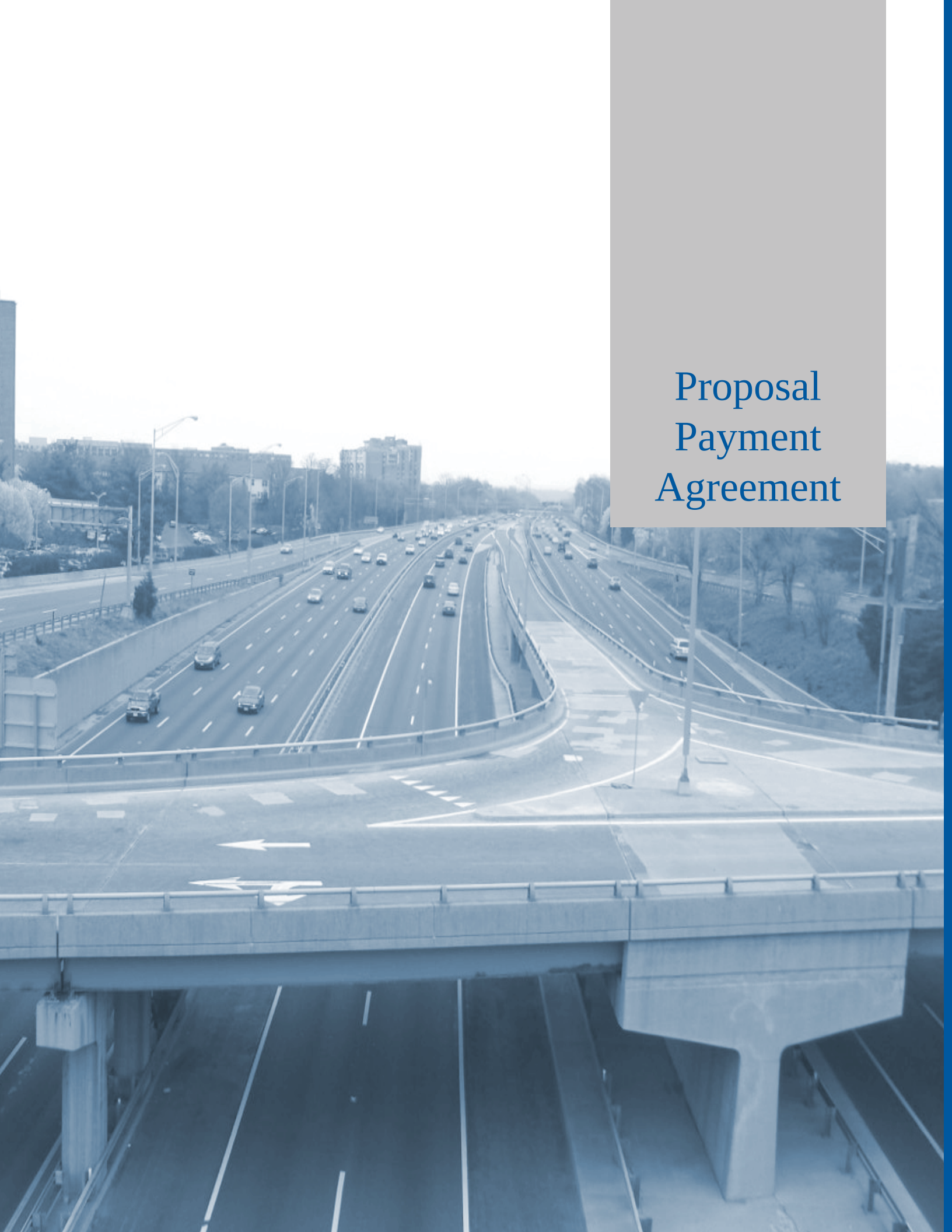

Proposal Payment Agreement

ATTACHMENT 9.3.1
PROPOSAL PAYMENT AGREEMENT

THIS PROPOSAL PAYMENT AGREEMENT (this "Agreement") is made and entered into as of this 9th day of January, 2013, by and between the Virginia Department of Transportation ("VDOT"), and Archer Western Construction, LLC ("Offeror").

WITNESSETH:

WHEREAS, Offeror is one of the entities who submitted Statements of Qualifications ("SOQs"), to the Virginia Department of Transportation ("VDOT), pursuant to VDOT's December 20, 2011 Request for Qualifications ("RFQ") and was invited to submit proposals in response to a Request for Proposals ("RFP") for the I-395 HOV Ramp at Seminary Road with I-395 NB Auxiliary Lane Extension, Project Nos. 0395-100-722 and 0395-100-736 ("Project"), under a design-build contract with VDOT ("Design-Build Contract"); and

WHEREAS, as part of the procurement process for the Project, Offeror has already provided and/or furnished to VDOT, and may continue to provide and/or furnish to VDOT, certain intellectual property, materials, information and ideas, including, but not limited to, such matters that are: (a) conveyed verbally and in writing during proprietary meetings or interviews; and (b) contained in, related to or associated with Offeror's proposal, including, but not limited to, written correspondence, designs, drawings, plans, exhibits, photographs, reports, printed material, tapes, electronic disks, or other graphic and visual aids (collectively "Offeror's Intellectual Property"); and

WHEREAS, VDOT is willing to provide a payment to Offeror, subject to the express conditions stated in this Agreement, to obtain certain rights in Offeror's Intellectual Property, provided that Offeror submits a proposal that VDOT determines to be responsive to the RFP ("Offeror's Proposal"), and either (a) Offeror is not awarded the Design-Build Contract; or (b) VDOT cancels the procurement or decides not to award the Design-Build Contract to any Offeror; and

WHEREAS, Offeror wishes to receive the payment offered by VDOT, in exchange for granting VDOT the rights set forth in this Agreement.

NOW, THEREFORE, in consideration of the mutual covenants and agreements set forth in this Agreement and other good and valuable consideration, the receipt and adequacy of which are acknowledged by the parties, the parties agree as follows:

1. **VDOT's Rights in Offeror's Intellectual Property**. Offeror hereby conveys to VDOT all rights, title and interest, free and clear of all liens, claims and encumbrances, in Offeror's Intellectual Property, which includes, without restriction or limitation, the right of VDOT, and anyone contracting with VDOT, to incorporate any ideas or information from Offeror's Intellectual Property into: (a) the Design-Build Contract and the Project; (b) any other contract awarded in reference to the Project; or (c) any subsequent procurement by VDOT. In receiving all rights, title and interest in Offeror's Intellectual Property, VDOT is deemed to own all intellectual property rights, copyrights, patents, trade secrets, trademarks, and service marks in Offeror's Intellectual Property, and Offeror agrees that it shall, at the request of VDOT, execute all papers and perform all other acts that may be necessary to ensure that VDOT's rights, title and interest in Offeror's Intellectual Property are protected. The rights conferred herein to VDOT include, without limitation, VDOT's ability to use Offeror's Intellectual Property without the obligation to notify or seek permission from Offeror.

2. **Exclusions from Offeror's Intellectual Property**. Notwithstanding Section 1 above, it is understood and agreed that Offeror's Intellectual Property is not intended to include, and Offeror does not convey any rights to, the Escrow Proposal Documents submitted by Offeror in accordance with the RFP.

3. **Proposal Payment**. VDOT agrees to pay Offeror the lump sum amount of fifty thousand and 00/100 Dollars ($50,000.00) ("Proposal Payment"), which payment constitutes payment in full to Offeror for the conveyance of Offeror's Intellectual Property to VDOT in accordance with this Agreement. Payment of the Proposal Payment is conditioned upon: (a) Offeror's Proposal being, in the sole discretion of VDOT, responsive to the RFP; (b) Offeror complying with all other terms and conditions of this Agreement; and (c) either (i) Offeror is not awarded the Design-Build Contract, or (ii) VDOT cancels the procurement or decides not to award the Design-Build Contract to any Offeror.

4. **Payment Due Date**. Subject to the conditions set forth in this Agreement, VDOT will make payment of the Proposal Payment to the Offeror within forty-five (45) days after the later of: (a) notice from VDOT that it has awarded the Design-Build Contract to another Offeror; or (b) notice from VDOT that the procurement for the Project has been cancelled and that there will be no Contract Award.

5. **Effective Date of this Agreement**. The rights and obligations of VDOT and Offeror under this Agreement, including VDOT's ownership rights in Offeror's Intellectual Property, vests upon the date that Offeror's Proposal is submitted to VDOT. Notwithstanding the above, if Offeror's Proposal is determined by VDOT, in its sole discretion, to be nonresponsive to the RFP, then Offeror is deemed to have waived its right to obtain the Proposal Payment, and VDOT shall have no obligations under this Agreement.

6. **Indemnity**. Subject to the limitation contained below, Offeror shall, at its own expense, indemnify, protect and hold harmless VDOT and its agents, directors, officers, employees, representatives and contractors from all claims, costs, expenses, liabilities, demands, or suits at law or equity ("Claims") of, by or in favor of or awarded to any third party arising in whole or in part from: (a) the negligence or wilful misconduct of Offeror or any of its agents, officers, employees, representatives or subcontractors; or (b) breach of any of Offeror's obligations under this Agreement, including its representation and warranty under Section 8 hereof. This indemnity shall not apply with respect to any Claims caused by or resulting from the sole negligence or wilful misconduct of VDOT, or its agents, directors, officers, employees, representatives or contractors.

7. **Assignment**. Offeror shall not assign this Agreement, without VDOT's prior written consent, which consent may be given or withheld in VDOT's sole discretion. Any assignment of this Agreement without such consent shall be null and void.

8. **Authority to Enter into this Agreement**. By executing this Agreement, Offeror specifically represents and warrants that it has the authority to convey to VDOT all rights, title, and interest in Offeror's Intellectual Property, including, but not limited to, those any rights that might have been vested in team members, subcontractors, consultants or anyone else who may have contributed to the development of Offeror's Intellectual Property, free and clear of all liens, claims and encumbrances.

9. **Miscellaneous**.

a. Offeror and VDOT agree that Offeror, its team members, and their respective employees are not agents of VDOT as a result of this Agreement.

b. Any capitalized term used herein but not otherwise defined shall have the meanings set forth in the RFP.

c. This Agreement, together with the RFP, embodies the entire agreement of the parties with respect to the subject matter hereof. There are no promises, terms, conditions, or obligations other than those contained herein or in the RFP, and this Agreement shall supersede all previous communications, representations, or agreements, either verbal or written, between the parties hereto.

d. It is understood and agreed by the parties hereto that if any part, term, or provision of this Agreement is by the courts held to be illegal or in conflict with any law of the Commonwealth of Virginia, validity of the remaining portions or provisions shall not be affected, and the rights and obligations of the parties shall be construed and enforced as if the Agreement did not contain the particular part, term, or provisions to be invalid.

e. This Agreement shall be governed by and construed in accordance with the laws of the Commonwealth of Virginia.

IN WITNESS WHEREOF, this Agreement has been executed and delivered as of the day and year first above written.

VIRGINIA DEPARTMENT OF TRANSPORTATION

By: _____

Name: _____

Title: _____

[Insert Offeror's Name] Archer Western Construction, LLC

By: _____

Name: David B. Casey,

Title: Vice President

Debarment Forms

ATTACHMENT 11.8.6(a)
CERTIFICATION REGARDING DEBARMENT
PRIMARY COVERED TRANSACTIONS

Project No.: 0395-100-722, 0395-100-736

1) The prospective primary participant certifies to the best of its knowledge and belief, that it and its principals:

a) Are not presently debarred, suspended, proposed for debarment, declared ineligible, or voluntarily excluded from covered transactions by any Federal department or agency.

b) Have not within a three-year period preceding this proposal been convicted of or had a civil judgment rendered against them for commission of fraud or a criminal offense in connection with obtaining, attempting to obtain, or performing a public (Federal, State or local) transaction or contract under a public transaction; and have not been convicted of any violations of Federal or State antitrust statutes or commission of embezzlement, theft, forgery, bribery, falsification, or destruction of records, making false statements, or receiving stolen property;

c) Are not presently indicted for or otherwise criminally or civilly charged by a governmental entity (Federal, State or local) with commission of any of the offenses enumerated in paragraph 1) b) of this certification; and

d) Have not within a three-year period preceding this application/proposal had one or more public transactions (Federal, State or local) terminated for cause or default.

2) Where the prospective primary participant is unable to certify to any of the statements in this certification, such prospective participant shall attach an explanation to this proposal.

The undersigned makes the foregoing statements to be filed with the proposal submitted on behalf of the Offeror for contracts to be let by the Commonwealth Transportation Board.

Signature David B. Casey	12-3-2012 Date	Vice President Title

Archer Western Construction, LLC
Name of Firm

ATTACHMENT 11.8.6(b)
CERTIFICATION REGARDING DEBARMENT
LOWER TIER COVERED TRANSACTIONS

Project No.: 0395-100-722, 0395-100-736

1) The prospective lower tier participant certifies, by submission of this proposal, that neither it nor its principals is presently debarred, suspended, proposed for debarment, declared ineligible, or voluntarily excluded from participation in this transaction by any Federal department or agency.

2) Where the prospective lower tier participant is unable to certify to any of the statements in this certification, such prospective participant shall attach an explanation to this proposal.

The undersigned makes the foregoing statements to be filed with the proposal submitted on behalf of the Offeror for contracts to be let by the Commonwealth Transportation Board.

Stephen Walter Dec. 7, 2012 Vice President

Signature Date Title

Parsons

Name of Firm

ATTACHMENT 11.8.6(b)
CERTIFICATION REGARDING DEBARMENT
LOWER TIER COVERED TRANSACTIONS

Project No.: 0395-100-722, 0395-100-736

1) The prospective lower tier participant certifies, by submission of this proposal, that neither it nor its principals is presently debarred, suspended, proposed for debarment, declared ineligible, or voluntarily excluded from participation in this transaction by any Federal department or agency.

2) Where the prospective lower tier participant is unable to certify to any of the statements in this certification, such prospective participant shall attach an explanation to this proposal.

The undersigned makes the foregoing statements to be filed with the proposal submitted on behalf of the Offeror for contracts to be let by the Commonwealth Transportation Board.

	12/3/12	President
Signature	Date	Title

Accompong Engineering Group LLC

Name of Firm

ATTACHMENT 11.8.6(b)
CERTIFICATION REGARDING DEBARMENT
LOWER TIER COVERED TRANSACTIONS

Project No.: 0395-100-722, 0395-100-736

1) The prospective lower tier participant certifies, by submission of this proposal, that neither it nor its principals is presently debarred, suspended, proposed for debarment, declared ineligible, or voluntarily excluded from participation in this transaction by any Federal department or agency.

2) Where the prospective lower tier participant is unable to certify to any of the statements in this certification, such prospective participant shall attach an explanation to this proposal.

The undersigned makes the foregoing statements to be filed with the proposal submitted on behalf of the Offeror for contracts to be let by the Commonwealth Transportation Board.

	12/3/12	President
Signature	Date	Title

Athavale, Lystad & Associates, Inc.

Name of Firm

ATTACHMENT 11.8.6(b)
CERTIFICATION REGARDING DEBARMENT
LOWER TIER COVERED TRANSACTIONS

Project No.: 0395-100-722, 0395-100-736

1) The prospective lower tier participant certifies, by submission of this proposal, that neither it nor its principals is presently debarred, suspended, proposed for debarment, declared ineligible, or voluntarily excluded from participation in this transaction by any Federal department or agency.

2) Where the prospective lower tier participant is unable to certify to any of the statements in this certification, such prospective participant shall attach an explanation to this proposal.

The undersigned makes the foregoing statements to be filed with the proposal submitted on behalf of the Offeror for contracts to be let by the Commonwealth Transportation Board.

Signature	December 3, 2012 Date	President Title

Endesco, Inc.
Name of Firm

ATTACHMENT 11.8.6(b)
CERTIFICATION REGARDING DEBARMENT
LOWER TIER COVERED TRANSACTIONS

Project No.: 0395-100-722, 0395-100-736

1) The prospective lower tier participant certifies, by submission of this proposal, that neither it nor its principals is presently debarred, suspended, proposed for debarment, declared ineligible, or voluntarily excluded from participation in this transaction by any Federal department or agency.

2) Where the prospective lower tier participant is unable to certify to any of the statements in this certification, such prospective participant shall attach an explanation to this proposal.

The undersigned makes the foregoing statements to be filed with the proposal submitted on behalf of the Offeror for contracts to be let by the Commonwealth Transportation Board.

	December 20, 2012	President/COO
Signature	Date	Title

McDonough Bolyard Peck, Inc. (d/b/a MBP)
Name of Firm

ATTACHMENT 11.8.6(b)
CERTIFICATION REGARDING DEBARMENT
LOWER TIER COVERED TRANSACTIONS

Project No.: 0395-100-722, 0395-100-736

1) The prospective lower tier participant certifies, by submission of this proposal, that neither it nor its principals is presently debarred, suspended, proposed for debarment, declared ineligible, or voluntarily excluded from participation in this transaction by any Federal department or agency.

2) Where the prospective lower tier participant is unable to certify to any of the statements in this certification, such prospective participant shall attach an explanation to this proposal.

The undersigned makes the foregoing statements to be filed with the proposal submitted on behalf of the Offeror for contracts to be let by the Commonwealth Transportation Board.

November 30, 2012 — Director of Transportation/VP of Operations

Signature — Date — Title

RINKER DESIGN ASSOCIATES, P.C.

Name of Firm

ATTACHMENT 11.8.6(b)
CERTIFICATION REGARDING DEBARMENT
LOWER TIER COVERED TRANSACTIONS

Project No.: 0395-100-722, 0395-100-736

1) The prospective lower tier participant certifies, by submission of this proposal, that neither it nor its principals is presently debarred, suspended, proposed for debarment, declared ineligible, or voluntarily excluded from participation in this transaction by any Federal department or agency.

2) Where the prospective lower tier participant is unable to certify to any of the statements in this certification, such prospective participant shall attach an explanation to this proposal.

The undersigned makes the foregoing statements to be filed with the proposal submitted on behalf of the Offeror for contracts to be let by the Commonwealth Transportation Board.

_____	December 3, 2012	Senior Vice President
Signature	Date	Title

Schnabel Engineering Consultants, Inc.
Name of Firm

ATTACHMENT 11.8.6(b)
CERTIFICATION REGARDING DEBARMENT
LOWER TIER COVERED TRANSACTIONS

Project No.: 0395-100-722, 0395-100-736

1) The prospective lower tier participant certifies, by submission of this proposal, that neither it nor its principals is presently debarred, suspended, proposed for debarment, declared ineligible, or voluntarily excluded from participation in this transaction by any Federal department or agency.

2) Where the prospective lower tier participant is unable to certify to any of the statements in this certification, such prospective participant shall attach an explanation to this proposal.

The undersigned makes the foregoing statements to be filed with the proposal submitted on behalf of the Offeror for contracts to be let by the Commonwealth Transportation Board.

Signature	Date	Title
	December 20, 2012	Senior Vice President & Partner

Stratacomm LLC
Name of Firm

ATTACHMENT 11.8.6(b)
CERTIFICATION REGARDING DEBARMENT
LOWER TIER COVERED TRANSACTIONS

Project No.: 0395-100-722, 0395-100-736

1) The prospective lower tier participant certifies, by submission of this proposal, that neither it nor its principals is presently debarred, suspended, proposed for debarment, declared ineligible, or voluntarily excluded from participation in this transaction by any Federal department or agency.

2) Where the prospective lower tier participant is unable to certify to any of the statements in this certification, such prospective participant shall attach an explanation to this proposal.

The undersigned makes the foregoing statements to be filed with the proposal submitted on behalf of the Offeror for contracts to be let by the Commonwealth Transportation Board.

	12/3/2012	Principal
Signature	Date	Title

Sabra, Wang & Associates, Inc.
Name of Firm

Schedule

4.6 PROPOSAL SCHEDULE

PROJECT MILESTONES

The I-395 HOV Ramp and Auxiliary Lane Project Schedule details our plan for all phases of the design-build process based upon achieving the following milestones:

Milestone	Date (Both Proposals)
Interim (Open HOV Ramp)	9-24-15
Substantial Completion	12/18/15
Final Completion	12/18/15

WORK BREAKDOWN STRUCTURE

Level 1 of the Work Breakdown Structure (WBS) groups the schedule into the phase of the design-build process as follows:

- *Milestones and Procurement:* Schedule section reserved for easy review of the project status
- *Design:* Includes preliminary engineering services, plan development, QA/QC reviews, submittal milestones, and VDOT reviews and approvals of design submissions. This section of the schedule includes a second level WBS structure to group design activities by type of design submission including right-of-way, roadway, bridge, walls (retaining and noise), and utilities.
- *I-395 Sanger Avenue to Seminary Road:* Includes all components of roadway and bridge construction as well as MOT, construction access, signals, signage, ITS, paving, retaining walls, Pedestrian Bridge, and noise barriers. This section is further divided into groups and subgroups of work packages that can be easily tracked to ensure on-time completion of the project, with the groups being the I-395 Seminary Road Off-Ramp; I-395 Southbound Reconstruction; Seminary Road Bridge Reconstruction; and Pedestrian Bridge Construction.
- *I-395 Auxiliary Lane to Sanger Avenue:* Includes all components of roadway, MOT, construction access, paving, and noise barriers.

CALENDARS

The following is a description of the calendars used for this project:

- Global Calendar – All calendars are based upon eight hour work days and include the following holidays: New Years Day, Memorial Day, July 4th, Labor Day, Thanksgiving, the day after Thanksgiving, Christmas Eve, and Christmas Day.
- Calendar 1 – “5 Day Workweek” – this calendar is based on five working days per week and is used for all design and administrative activities that are unaffected by weather.
- Calendar 2 – “7 Day Calendar” – Assigned to activities that have durations based upon calendar days instead of work days.

SCHEDULE TIMING AND CRITICAL PATH

Design Phase: The design phase includes scope validation, preparation of plans, QA/QC reviews, and submission of right-of-way/maintenance of traffic, roadway, bridge, retaining wall, and noise barrier plans at multiple stages of the design process with an activity for VDOT review after each submission. The design phase also includes non-critical activities for the completion of surveys, utility designations, SUE, utility relocation plans, and geotechnical investigations, including an activity for VDOT’s review of the geotechnical report prior to submission of the final roadway and bridge plans. Our team will begin the design phase of the project at our risk immediately upon Notice of Award in order to get an early jump on

the noise studies and right-of-way, maintenance of traffic, roadway, and bridge plans. The first formal plan submission will include right-of-way, maintenance of traffic, and erosion and sediment control plans in an effort to get an early start on the right-of-way acquisition phase.

I-395 Sanger Avenue to Seminary Road: This portion of the project is divided into four work packages for ease of tracking and explanation - I-395 Seminary Road Off-Ramp; I-395 Southbound Reconstruction; Seminary Road Bridge Reconstruction; and Pedestrian Bridge Construction. Work will begin along I-395 NB GP Lanes for the new retaining walls and utility relocations to accommodate widening the GP lanes and off-ramp. Another early item will be the reconstruction of the I-95 GP outside shoulder north of the Seminary Road Off-Ramp. Both the widening and the shoulder reconstruction are necessary to shift the NB traffic to accommodate the new HOV Ramp. Work on the HOV ramp foundations is not expected to begin until the traffic is shifted eastward.

As work begins along I-395 NB, we will simultaneously begin the process of replacing all the steel beams on the Seminary Road Bridge. This bridge demolition and reconstruction will occur in thirds, beginning with the southern third of the bridge. Once completed we will shift traffic onto the new roadway in order to demo and reconstruct the northern third, eventually repeating this process to complete the middle. The reconstruction of the Seminary Road Bridge is linked directly with the construction of the Pedestrian Bridge, since this new pathway must be completed prior to beginning work on the northern third of the bridge. It is also directly linked to HOV Ramp Pier 9 since the northernmost span of the HOV ramp is an integral part of the Seminary Road Bridge.

Non critical path work for this portion of the project includes the widening of the southbound Sanger Avenue Bridge and the noise walls along the I-395 Southbound GP lanes. This work is resource driven and is not on the critical paths for the interim milestone of opening the HOV Ramp or Final Completion.

I-395 Auxiliary Lane to Seminary Road: The timing for beginning the auxiliary lane portion of the project is tied to activities for the I-395 Northbound GP and Seminary Road Off-Ramp widening. The linkage is resource driven. For example, if the auxiliary lane is included in the contract then once the clearing is completed along I-395 NB that crew will continue southward to the clearing along the auxiliary lane. Similarly, construction of the retaining walls RW-1 and RW-2 will be performed by the crews that have just finished walls RW-3 and 4 in the HOV Ramp project, followed by the noise walls. And of course, the roadwork will be also completed as a continuous operation with the final activities being the installation of the barrier/guardrail and a mill and overlay of the existing pavement.

The Auxiliary Lane project has priority over the work along I-395 Southbound only because the work zone is contiguous with the work zone for widening I-95 GP roadway. Should the auxiliary Lane not be constructed then the work along I-395 Southbound will occur sooner, however the overall completion date of the project remains the same regardless of whether or not the Axillary lane is constructed.

Activity ID	Activity Name	Original Duration	Start	Finish
VDOT I-395 HOV Ramp & Aux Lane		727d	13-Feb-13	18-Dec-15
Milestones & Procurement		727d	13-Feb-13	18-Dec-15
A1000	Price Proposal Submission	0d	13-Feb-13*	
A1010	Notice to Proceed	0d	25-Apr-13*	
A1020	Interim Milestone (Open HOV Ramp)	0d		24-Sep-15*
A1030	Substantial/Final Completion	0d		18-Dec-15*
A1510	Complete Punchlist Items	20d	20-Nov-15	18-Dec-15
Design: I-395 HOV Ramp		245d	25-Apr-13	10-Apr-14
A1040	Design Complete / Start Construction	0d		10-Apr-14
Quality Assurance / Quality Control		41d	25-Apr-13	21-Jun-13
A2330	Prepare Quality Assurance and Quality Control (QA/QC) Plan	5d	25-Apr-13	01-May-13
A2340	Submit QA/QC Plan to VDOT	1d	02-May-13	02-May-13
A2350	VDOT Review	15d	03-May-13	23-May-13
A2360	QA/QC plan Approval	5d	17-Jun-13	21-Jun-13
A2370	Revise and Resubmit QA/QC Plan	15d	24-May-13	14-Jun-13
Scope Validation		85d	25-Apr-13	23-Aug-13
A2380	Scope Validation Investigations	80d	25-Apr-13	16-Aug-13
A2390	Submit Scope Validation Findings Report	5d	19-Aug-13	23-Aug-13
Verify Survey & Supplemental Survey		65d	25-Apr-13	26-Jul-13
A2400	Verify Survey	15d	25-Apr-13	15-May-13
A2410	Prepare Property owner Notification Letters for Survey	5d	16-May-13	22-May-13
A2420	Supplemental Field Surveys	25d	23-May-13	27-Jun-13
A2430	Prepare Updated Survey File	20d	28-Jun-13	26-Jul-13
Utilities Delineation - SUE		33d	25-Apr-13	11-Jun-13
A2440	Meet with VDOT Regional Utility Manager	1d	25-Apr-13	25-Apr-13
A2450	Prepare Property owner Notification Letters for SUE	10d	26-Apr-13	09-May-13
A2460	Prepare & Submit Utility Communication Plan	5d	10-May-13	16-May-13
A2470	Perform SUE Designations and Test Holes	5d	17-May-13	23-May-13
A2480	Prepare Test Hole Data Sheets	2d	24-May-13	28-May-13
A2490	Meet with Utility Owners	5d	29-May-13	04-Jun-13
A2500	Prepare and Submit Updated Subsurface Utility Information	5d	05-Jun-13	11-Jun-13
Utility Relocation Plans		70d	12-Jun-13	19-Sep-13
A2510	Prepare and Submit Preliminary Utility Relocation Plans	20d	12-Jun-13	10-Jul-13
A2520	VDOT Review	15d	11-Jul-13	31-Jul-13
A2530	Prepare and Submit Final Utility Relocation Plans	20d	01-Aug-13	28-Aug-13
A2540	Written Approval from VDOT to Commence Relocations	15d	29-Aug-13	19-Sep-13
Noise Analysis		106d	25-Apr-13	24-Sep-13
A2550	Receive Existing TNM Models from VDOT	1d	25-Apr-13	25-Apr-13
A2560	Evaluate Existing TNM files	15d	26-Apr-13	16-May-13
A2570	Obtain Supplemental Study Data	20d	17-May-13	14-Jun-13

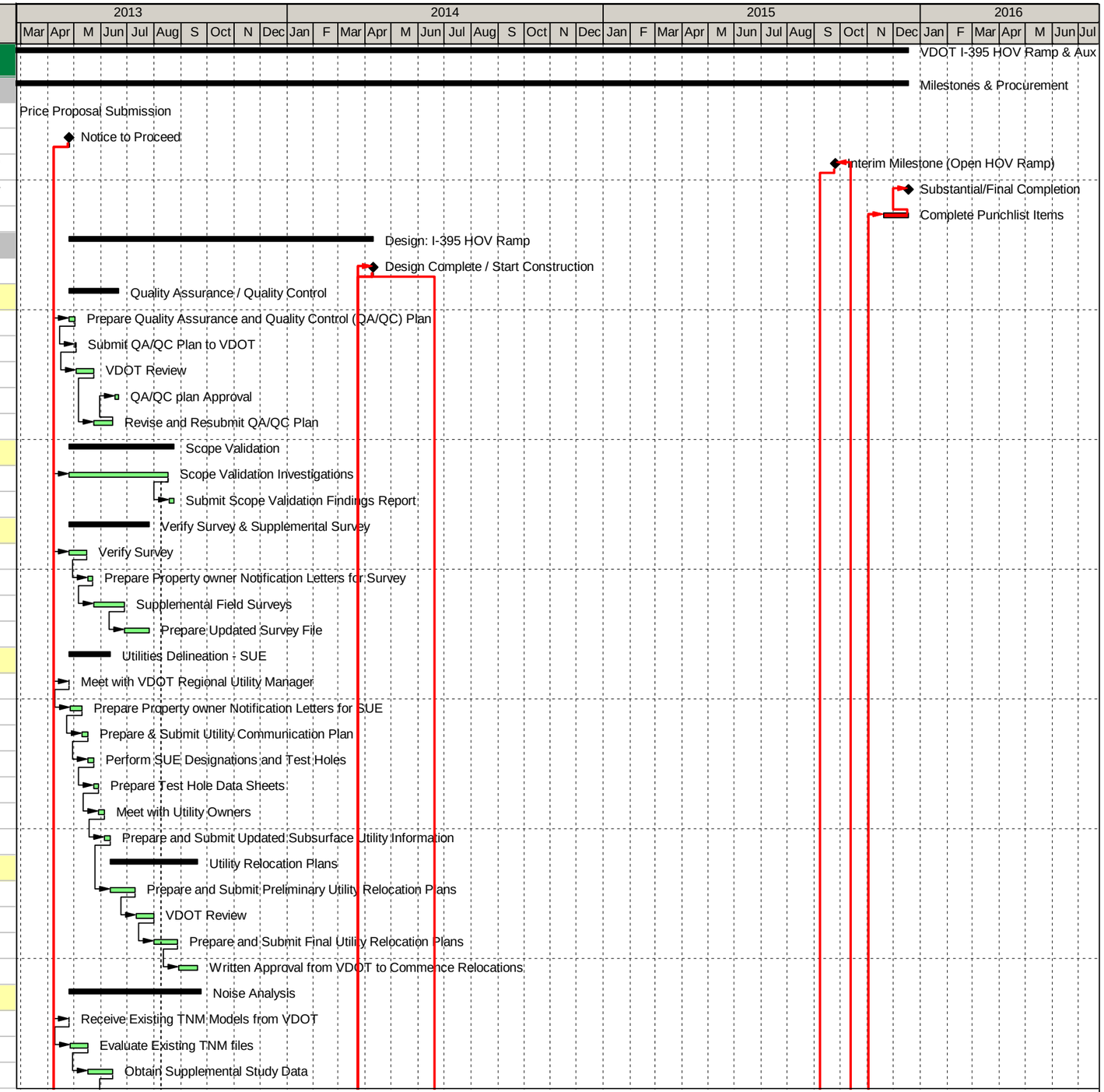

Remaining Level of Effort
Actual Level of Effort
Actual Work
Remaining Work
Critical Remaining Work
Milestone
Summary

Virginia Department of Transportation
Proposal Schedule
January 9, 2013

I-395 HOV Ramp at Seminary Road
I-395 NB Auxiliary Lane
Alexandria, Virginia

PARSONS

Activity ID	Activity Name	Original Duration	Start	Finish
A2580	Incorporate Proposed Alignments in Noise Model and Evaluate	15d	17-Jun-13	08-Jul-13
A2590	Develop Noise Abatement Design Report (NADR) and Submit	15d	09-Jul-13	29-Jul-13
A2600	VDOT Review and Comment	15d	30-Jul-13	19-Aug-13
A2610	Resubmit Final NADR and Model for walls along NB Lanes	10d	20-Aug-13	03-Sep-13
A2620	Receive VDOT Concurrence on NADR	15d	04-Sep-13	24-Sep-13
Geotechnical Design		90d	25-Apr-13	30-Aug-13
A2650	Prepare Property Owner Notification Letters for Geotechnical Inv...	5d	25-Apr-13	01-May-13
A2660	Submit Subsurface Exploration Plan	5d	02-May-13	08-May-13
A2670	VDOT Review	15d	09-May-13	30-May-13
A2680	Subsurface Investigations/ Pavement Check	15d	31-May-13	20-Jun-13
A2690	Boring Logs and Lab Work	10d	21-Jun-13	05-Jul-13
A2700	Geotech Development of Design Memorandums	15d	08-Jul-13	26-Jul-13
A2710	Complete and Submit Final Geotechnical Report	5d	29-Jul-13	02-Aug-13
A2720	VDOT Review-Final Geotechnical Data Report, Resolution Meet...	15d	05-Aug-13	23-Aug-13
A2730	Final Geotechnical Data Report	5d	26-Aug-13	30-Aug-13
Drainage Design / SWM		145d	25-Apr-13	18-Nov-13
A2740	Drainage Design, MS 19 Analysis	40d	25-Apr-13	20-Jun-13
A2750	SWM Design & Post Construction SWM Plan	20d	21-Jun-13	19-Jul-13
A2760	50% Drainage, SWM and ESC Plans and Submittal	15d	22-Jul-13	09-Aug-13
A2770	VDOT Review of 50% Drainage, SWM & ESC	15d	12-Aug-13	30-Aug-13
A2780	Multi-Phased ESC Plans & Narrative & SWPPP	20d	03-Sep-13	30-Sep-13
A2790	Final Drainage, SWM and ESCP Plans and Modification VSMP/...	20d	01-Oct-13	28-Oct-13
A2800	VDOT Review and Approval Final SWM, Drainage, DCR VSMP...	15d	29-Oct-13	18-Nov-13
Preliminary Roadway Designs / ROW Plans		125d	25-Apr-13	21-Oct-13
A3030	Horizontal and Vertical Geometry, SE, Typical Sections	30d	25-Apr-13	06-Jun-13
A3040	Submit Preliminary Field Inspection (PFI) Plans	5d	07-Jun-13	13-Jun-13
A3050	VDOT Review - PFI Plans	15d	14-Jun-13	05-Jul-13
A3060	Cross Sections and Limits of Disturbance	30d	14-Jun-13	26-Jul-13
A3070	Identify ROW, Perm & Temp Easements, and Utility Easements	20d	29-Jul-13	23-Aug-13
A3080	Develop and Submit Right of Way Plans	15d	26-Aug-13	16-Sep-13
A3090	VDOT Review- Right of Way Plans	15d	17-Sep-13	07-Oct-13
A3100	Address Review Comments and Submit Final Right of Way Plans	10d	08-Oct-13	21-Oct-13
A3110	Approved Right of Way Plans	0d		21-Oct-13
Right of Way & Acquisitions		107d	22-Oct-13	24-Mar-14
A3120	VDOT Issue Notice to Commence ROW	1d	22-Oct-13	22-Oct-13
A3130	Prepare and Submit Acquisition and Relocation Plan	21d	23-Oct-13	20-Nov-13
A3140	VDOT Review and Approve Acquisition and Relocation Plan	15d	21-Nov-13	12-Dec-13
A3150	Appraisals, Appraisal Review (incl. VDOT Approval) Titles, Report	30d	13-Dec-13	27-Jan-14
A3160	Property Acquisitions	40d	28-Jan-14	24-Mar-14
Temporary Traffic Control		150d	25-Apr-13	25-Nov-13
A2970	Preliminary Transportation Management Plan (TMP)	21d	25-Apr-13	23-May-13

Remaining Level of Effort
Actual Level of Effort
Actual Work
Remaining Work
Critical Remaining Work
Milestone
Summary

Virginia Department of Transportation
Proposal Schedule
January 9, 2013

I-395 HOV Ramp at Seminary Road
I-395 NB Auxiliary Lane
Alexandria, Virginia

PARSONS

Activity ID	Activity Name	Original Duration	Start	Finish
A2980	Preliminary Temporary Traffic Control Plans	60d	25-Apr-13	19-Jul-13
A2990	VDOT Review	15d	22-Jul-13	09-Aug-13
A3000	Final Transportation Management Plan (TMP)	21d	12-Aug-13	10-Sep-13
A3010	Final Temporary Traffic Control Plans	60d	12-Aug-13	04-Nov-13
A3020	VDOT Review	15d	05-Nov-13	25-Nov-13
Traffic Control Devices/Lighting/ITS		105d	25-Apr-13	23-Sep-13
A2900	Develop Existing Sign Inventory Plan	10d	25-Apr-13	08-May-13
A2910	Lighting Warrant Analysis and Report	10d	25-Apr-13	08-May-13
A2920	ITS Design and Communication Plan Development	15d	25-Apr-13	15-May-13
A2930	Prepare and Submit Preliminary Traffic, Lighting, and ITS Plans	30d	16-May-13	27-Jun-13
A2940	VDOT Review	15d	28-Jun-13	19-Jul-13
A2950	Final Traffic, Lighting, and ITS Plans	30d	22-Jul-13	30-Aug-13
A2960	VDOT Review	15d	03-Sep-13	23-Sep-13
Pedestrian Bridge Design (Package 1a)		185d	25-Apr-13	16-Jan-14
A2810	Preliminary Bridge Design	60d	25-Apr-13	19-Jul-13
A2820	Submit Preliminary Plans	10d	22-Jul-13	02-Aug-13
A2830	Receive VDOT Review Comments and Approval for Final Design	15d	05-Aug-13	23-Aug-13
A2840	Design and Submit 90% Structure Plans	70d	05-Aug-13	11-Nov-13
A2850	VDOT Review	15d	12-Nov-13	03-Dec-13
A2860	Final Structure Plans	15d	04-Dec-13	24-Dec-13
A2870	VDOT Review and Final Approval	15d	26-Dec-13	16-Jan-14
A2880	Approved Plans for Construction- Pedestrian Bridge	0d		16-Jan-14
Seminary Rd Bridge Design (Package 1b)		185d	25-Apr-13	16-Jan-14
A3170	Preliminary Bridge Design	60d	25-Apr-13	19-Jul-13
A3180	Submit Preliminary Plans	5d	22-Jul-13	26-Jul-13
A3190	Receive VDOT Review Comments and Approval for Final Design	15d	29-Jul-13	16-Aug-13
A3200	Design and Submit 90% Structure Plans	70d	29-Jul-13	04-Nov-13
A3210	VDOT Review	15d	05-Nov-13	25-Nov-13
A3220	Submit Final Structure Plans	20d	26-Nov-13	24-Dec-13
A3230	VDOT Review and Final Approval	15d	26-Dec-13	16-Jan-14
A3240	Approved Plans for Construction- Seminary Rd Bridge	0d		16-Jan-14
I-395 NB Widening/Seminary Ramp - Grading & EC (Package 1c)		80d	17-Sep-13	09-Jan-14
A3530	Final Horizontral and Vertical Geometry, SE, Typical Sections	10d	17-Sep-13	30-Sep-13
A3540	Final Grading Limits	10d	01-Oct-13	14-Oct-13
A3550	Final Erosion Control Measures	10d	01-Oct-13	14-Oct-13
A3560	Roadway Plans and Submittal- Construction Plans	15d	15-Oct-13	04-Nov-13
A3570	VDOT Review	15d	05-Nov-13	25-Nov-13
A3580	Address Review Comments and Submit Construction Plans	15d	26-Nov-13	17-Dec-13
A3590	VDOT Review and Approval	15d	18-Dec-13	09-Jan-14
A3600	Released for Construction Plans- Grading & Erosion Control	0d		09-Jan-14
I-395 Widening/Seminary Ramp - Final Roadway Design (Package...		100d	01-Oct-13	20-Feb-14

Remaining Level of Effort
Actual Level of Effort
Actual Work
Remaining Work
Critical Remaining Work
Milestone
Summary

Virginia Department of Transportation
Proposal Schedule
January 9, 2013

I-395 HOV Ramp at Seminary Road
I-395 NB Auxiliary Lane
Alexandria, Virginia

PARSONS

Activity ID	Activity Name	Original Duration	Start	Finish
A3610	Final Cross Sections	15d	01-Oct-13	21-Oct-13
A3620	Final Retaining Walls	15d	22-Oct-13	11-Nov-13
A3630	Roadway Incidentals and Details	20d	22-Oct-13	18-Nov-13
A3640	Roadway Plans and Submittal- Construction Plans	15d	19-Nov-13	10-Dec-13
A3650	VDOT Review	15d	11-Dec-13	02-Jan-14
A3660	Address Review Comments and Submit Construction Plans	20d	03-Jan-14	30-Jan-14
A3670	VDOT Review and Approval	15d	31-Jan-14	20-Feb-14
A3680	Released for Construction Plans- I395 NB Widening/Seminary ...	0d		20-Feb-14
Sanger Ave Bridge Design (Package 2b)		205d	25-Apr-13	13-Feb-14
A3250	Preliminary Bridge Design	60d	25-Apr-13	19-Jul-13
A3260	Submit Preliminary Plans	10d	22-Jul-13	02-Aug-13
A3270	Receive VDOT Review Comments and Approval for Final Design	15d	05-Aug-13	23-Aug-13
A3280	Final Superstructure Design and Plans	70d	05-Aug-13	11-Nov-13
A3290	Final Foundation Design, Plans & Structure Report	70d	05-Aug-13	11-Nov-13
A3300	Submit 90% Superstructure and Substructure Plans	15d	12-Nov-13	03-Dec-13
A3310	VDOT Review	15d	04-Dec-13	24-Dec-13
A3320	Submit Final Structure Plans	20d	26-Dec-13	23-Jan-14
A3330	VDOT Review and Final Approval	15d	24-Jan-14	13-Feb-14
A3340	Approved Plans for Construction- Sanger Avenue Bridge	0d		13-Feb-14
I-395 HOV Ramp - Final Roadway Design (Package 3a)		145d	17-Sep-13	10-Apr-14
A3450	Final Horizontal and Vertical Geometry, SE, Typical Sections	45d	17-Sep-13	18-Nov-13
A3460	Final Cross Sections	30d	19-Nov-13	02-Jan-14
A3470	Roadway Incidentals and Details	30d	19-Nov-13	02-Jan-14
A3480	Roadway Plans and Submittal- Construction Plans	10d	03-Jan-14	16-Jan-14
A3490	VDOT Review	15d	17-Jan-14	06-Feb-14
A3500	Address Review Comments and Submit Construction Plans	30d	07-Feb-14	20-Mar-14
A3510	VDOT Review and Approval	15d	21-Mar-14	10-Apr-14
A3520	Released for Construction Plans- I395 HOV Ramp and Incidentals	0d		10-Apr-14
HOV Ramp Bridge Design (Package 3b)		245d	25-Apr-13	10-Apr-14
A3350	Preliminary Bridge Design	60d	25-Apr-13	19-Jul-13
A3360	Submit Preliminary Plans	5d	22-Jul-13	26-Jul-13
A3370	Receive VDOT Review Comments and Approval for Final Design	15d	29-Jul-13	16-Aug-13
A3380	Final Superstructure Design and Plans	100d	29-Jul-13	17-Dec-13
A3390	Final Foundation Design, Plans & Structure Report	100d	29-Jul-13	17-Dec-13
A3400	Submit 90% Superstructure and Substructure Plans	20d	18-Dec-13	16-Jan-14
A3410	VDOT Review	15d	17-Jan-14	06-Feb-14
A3420	Submit Final Structure Plans	30d	07-Feb-14	20-Mar-14
A3430	VDOT Review and Final Approval	15d	21-Mar-14	10-Apr-14
A3440	Approved Plans for Construction- HOV Ramp Bridge	0d		10-Apr-14
Construction: I-395 Sanger Avenue to Seminary Road		421d	11-Apr-14	04-Dec-15
I-395 Seminary Road Off Ramp		386d	11-Apr-14	15-Oct-15

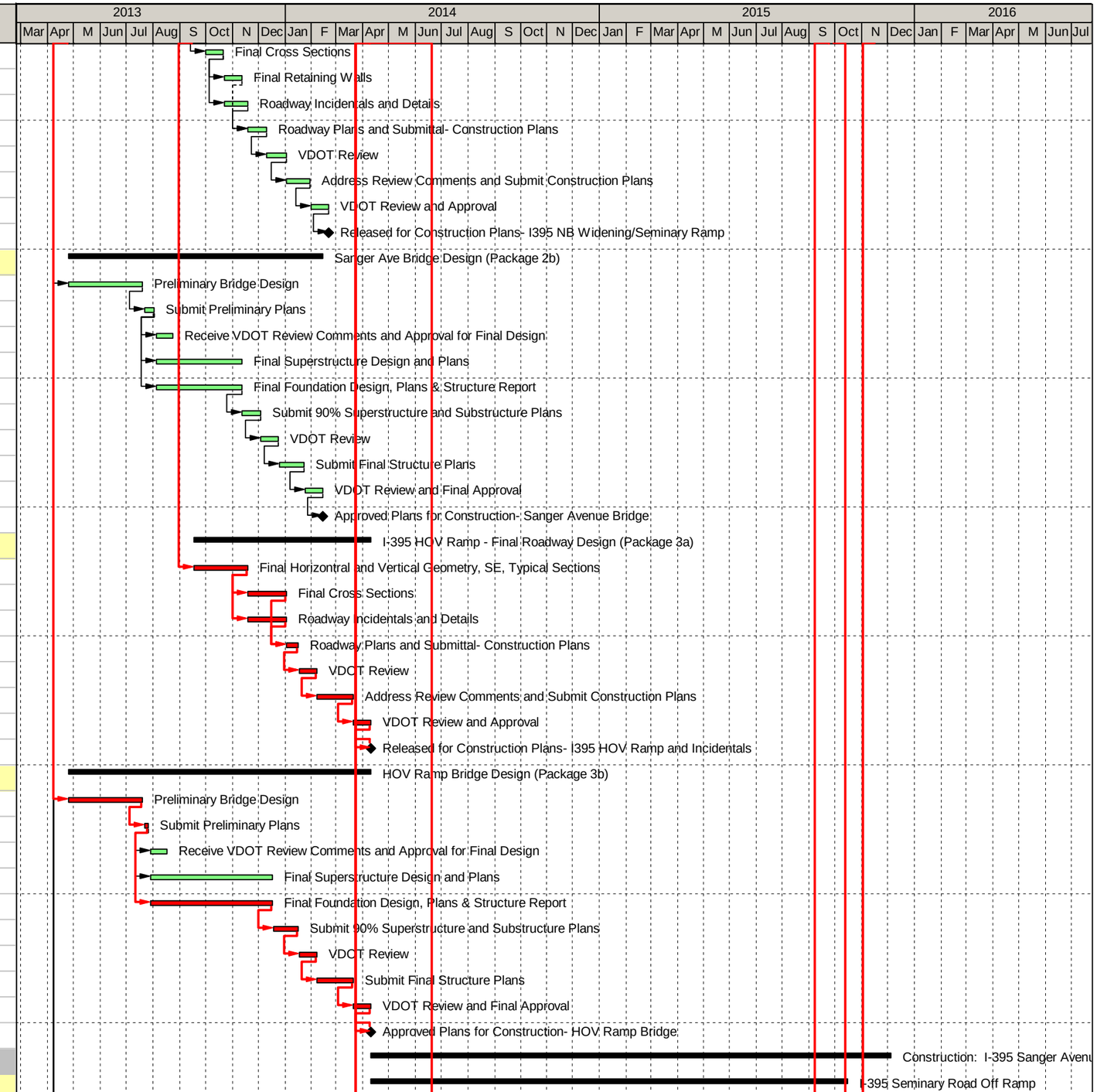

Remaining Level of Effort
Actual Level of Effort
Actual Work
Remaining Work
Critical Remaining Work
Milestone
Summary

Virginia Department of Transportation
Proposal Schedule
January 9, 2013

I-395 HOV Ramp at Seminary Road
I-395 NB Auxiliary Lane
Alexandria, Virginia

PARSONS

Activity ID	Activity Name	Original Duration	Start	Finish
Reconstruct Outside Shoulder & Widening		195d	11-Apr-14	16-Jan-15
A1230	Clearing & Demolition	10d	11-Apr-14	24-Apr-14
A1240	Utility Relocations (GAS, H2O, Conduit)	30d	25-Apr-14	06-Jun-14
A1245	Construct RW-4 (MSE)	10d	09-Jun-14	20-Jun-14
A1250	Construct RW-3 (Soil Nail)	25d	23-Jun-14	28-Jul-14
A1280	Construct Full Depth Widening	25d	29-Jul-14	02-Sep-14
A1350	Construct Noise Barrier #1	20d	19-Nov-14	17-Dec-14
A1520	Barrier Wall & Guardrail	10d	18-Dec-14	02-Jan-15
A1525	Shift NB I-395 eastward	5d	12-Jan-15	16-Jan-15
New HOV Ramp/I-395 Inside Shoulder Reconstruction		171d	16-Feb-15	15-Oct-15
A1380	Construct Fnds, Piers 8 thru 1	25d	16-Feb-15	20-Mar-15
A1390	Construct Substructure, Piers 8 thru 1	50d	23-Mar-15	01-Jun-15
A1400	Construct Superstructure, HOV Bridge	35d	02-Jun-15	21-Jul-15
A1410	Construct MSE Walls RW-5 & RW-6	60d	16-Feb-15	08-May-15
A1430	Construct Full Depth Pvmt	40d	11-May-15	07-Jul-15
A1440	Permanent Signage (Ovrhead & Cantilevers)	20d	22-Jul-15	18-Aug-15
A1470	Shift NB I-395 to Original	5d	19-Aug-15	25-Aug-15
A1475	Barrier Wall & Guardrail	10d	26-Aug-15	09-Sep-15
A1480	Open HOV Bridge	5d	18-Sep-15	24-Sep-15
A1485	Final Mill & Overlay - I-395 NB	15d	25-Sep-15	15-Oct-15
Sanger Ave Bridge Widening (NB)		60d	11-Apr-14	07-Jul-14
A1170	Demo Deck Edge - Sanger Ave Bridge	10d	11-Apr-14	24-Apr-14
A1180	Construct Abuts & WW - Sanger Ave Bridge NB	25d	25-Apr-14	30-May-14
A1190	Construct Superstructure - Sanger Ave NB	25d	02-Jun-14	07-Jul-14
I-395 Southbound Reconstruction		351d	08-Jul-14	19-Nov-15
Noise Barriers		40d	18-Dec-14	13-Feb-15
A1320	Construct Noise Barrier #2	20d	18-Dec-14	16-Jan-15
A1330	Construct Noise Barrier #3	20d	19-Jan-15	13-Feb-15
Sanger Ave Bridge Widening (SB)		351d	08-Jul-14	19-Nov-15
A1200	Narrow Traffic I-395 SB	5d	08-Jul-14	14-Jul-14
A1205	Demo Deck Edge - Sanger Ave Bridge	5d	15-Jul-14	21-Jul-14
A1210	Construct Abuts & WW - Sanger Ave Bridge SB	15d	22-Jul-14	11-Aug-14
A1220	Construct Superstructure - Sanger Ave SB	15d	12-Aug-14	02-Sep-14
A1340	Shift I-395 SB Back to Original Alignment	5d	16-Feb-15	20-Feb-15
A1360	Repaint entire bridge	20d	23-Feb-15	20-Mar-15
A1490	Remove Temp Stripe/Final Mill & Overlay - I-395 SB	15d	30-Oct-15	19-Nov-15
Seminary Road Bridge Reconstruction		421d	11-Apr-14	04-Dec-15
A1062	Fabricate Structural Steel	60d	11-Apr-14	07-Jul-14
A1065	Temp Pavement (Seminary Rd)	10d	08-Jul-14	21-Jul-14
A1070	Demolition - South 1/3 of Bridge	15d	22-Jul-14	11-Aug-14
A1090	Construct Superstructure - South 1/3 of Bridge	70d	12-Aug-14	18-Nov-14

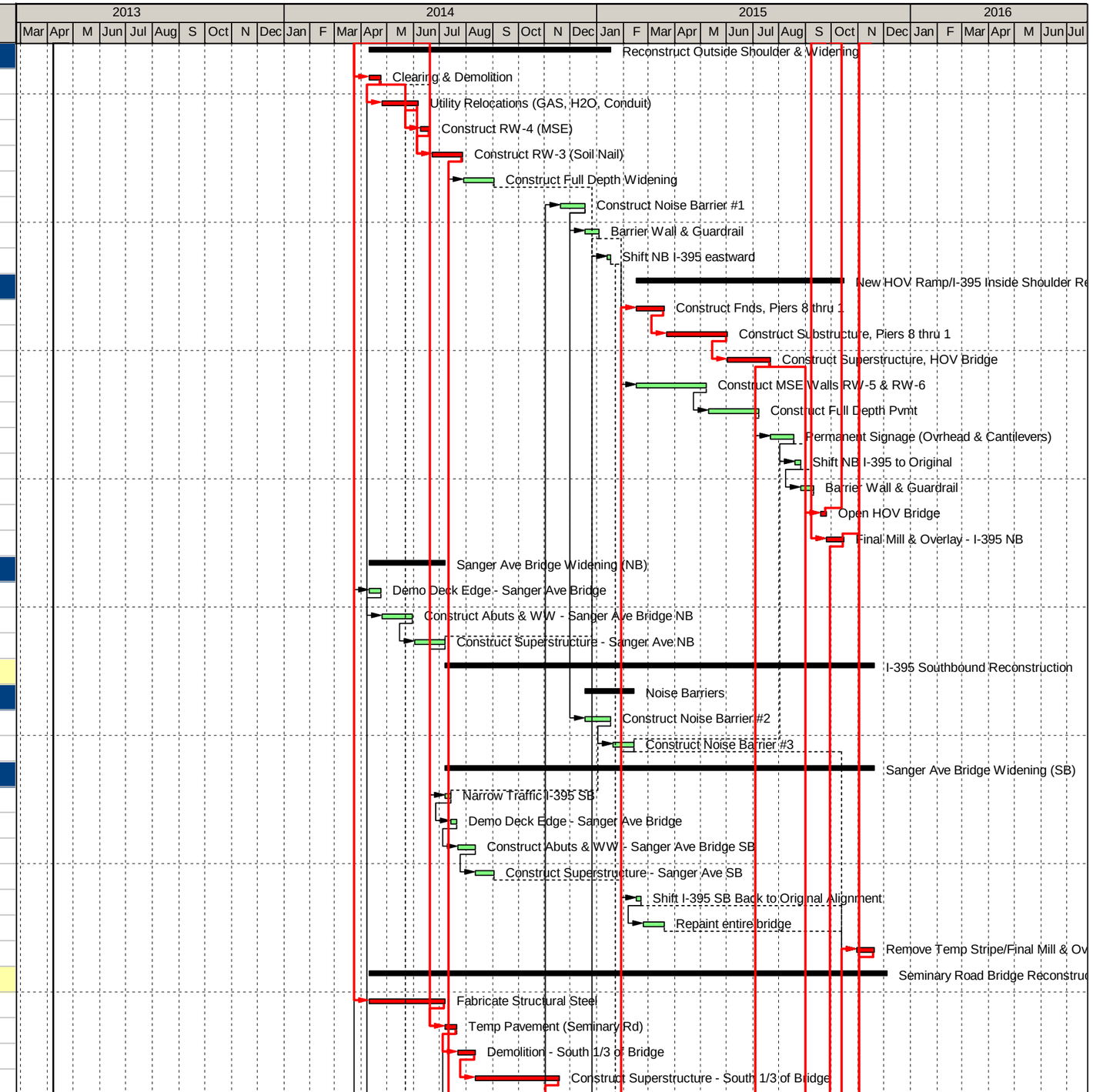

Remaining Level of Effort
Actual Level of Effort
Actual Work
Remaining Work
Critical Remaining Work
Milestone
Summary

Virginia Department of Transportation
Proposal Schedule
January 9, 2013

I-395 HOV Ramp at Seminary Road
I-395 NB Auxiliary Lane
Alexandria, Virginia

PARSONS

Activity ID	Activity Name	Original Duration	Start	Finish
A1095	Reconstruct I-395 GP Shoulder N of Seminary Rd Ramp	15d	22-Jul-14	11-Aug-14
A1100	Construct HOV Bridge Pier 9	20d	12-Aug-14	09-Sep-14
A1105	Demolition - North 1/3 of Bridge	15d	19-Nov-14	10-Dec-14
A1110	Construct Superstructure - North 1/3 of Bridge	70d	11-Dec-14	20-Mar-15
A1120	Demolition - Middle 1/3 of Bridge	15d	23-Mar-15	10-Apr-15
A1130	Construct Superstructure - Middle 1/3 of Bridge	70d	13-Apr-15	21-Jul-15
A1135	HOV Gates & Appurtenances	30d	22-Jul-15	01-Sep-15
A1450	Signals & Striping - Seminary Rd	11d	02-Sep-15	17-Sep-15
A1500	Final Mill & Overlay - Seminary Rd	10d	20-Nov-15	04-Dec-15
Pedestrian Bridge Construction		108d	11-Apr-14	12-Sep-14
A1140	Pedestrian Bridge Foundations	25d	11-Apr-14	15-May-14
A1150	Pedestrian Bridge Substructure	40d	16-May-14	14-Jul-14
A1155	Pedestrian Bridge Superstructure	30d	15-Jul-14	25-Aug-14
A1160	Pedestrian Bridge Lighting and Appurtenances	10d	26-Aug-14	09-Sep-14
A1165	Move Pedestrian Traffic to New Bridge	3d	10-Sep-14	12-Sep-14
Design: I-395 Auxiliary Lane to Sanger Ave		200d	25-Apr-13	06-Feb-14
Quality Assurance / Quality Control		41d	25-Apr-13	21-Jun-13
A1540	Prepare Quality Assurance and Quality Control (QA/QC) Plan	5d	25-Apr-13	01-May-13
A1550	Submit QA/QC Plan to VDOT	1d	02-May-13	02-May-13
A1560	VDOT Review	15d	03-May-13	23-May-13
A1570	QA/QC plan Approval	5d	17-Jun-13	21-Jun-13
A1580	Revise and Resubmit QA/QC Plan	15d	24-May-13	14-Jun-13
Scope Validation		85d	25-Apr-13	23-Aug-13
A1590	Scope Validation Investigations	80d	25-Apr-13	16-Aug-13
A1600	Submit Scope Validation Findings Report	5d	19-Aug-13	23-Aug-13
Verify Survey & Supplemental Survey		65d	25-Apr-13	26-Jul-13
A1610	Verify Survey	15d	25-Apr-13	15-May-13
A1620	Prepare Property owner Notification Letters for Survey	5d	16-May-13	22-May-13
A1630	Supplemental Field Surveys	25d	23-May-13	27-Jun-13
A1640	Prepare Updated Survey File	20d	28-Jun-13	26-Jul-13
Utilities Delineation - SUE		33d	25-Apr-13	11-Jun-13
A1650	Meet with VDOT Regional Utility Manager	1d	25-Apr-13	25-Apr-13
A1660	Prepare Property owner Notification Letters for SUE	10d	26-Apr-13	09-May-13
A1670	Prepare & Submit Utility Communication Plan	5d	10-May-13	16-May-13
A1680	Perform SUE Designations and Test Holes	5d	17-May-13	23-May-13
A1690	Prepare Test Hole Data Sheets	2d	24-May-13	28-May-13
A1700	Meet with Utility Owners	5d	29-May-13	04-Jun-13
A1710	Prepare and Submit Updated Subsurface Utility Information	5d	05-Jun-13	11-Jun-13
Utility Relocation Plans		60d	12-Jun-13	05-Sep-13
A1720	Prepare and Submit Preliminary Utility Relocation Plans	15d	12-Jun-13	02-Jul-13
A1730	VDOT Review	15d	03-Jul-13	24-Jul-13

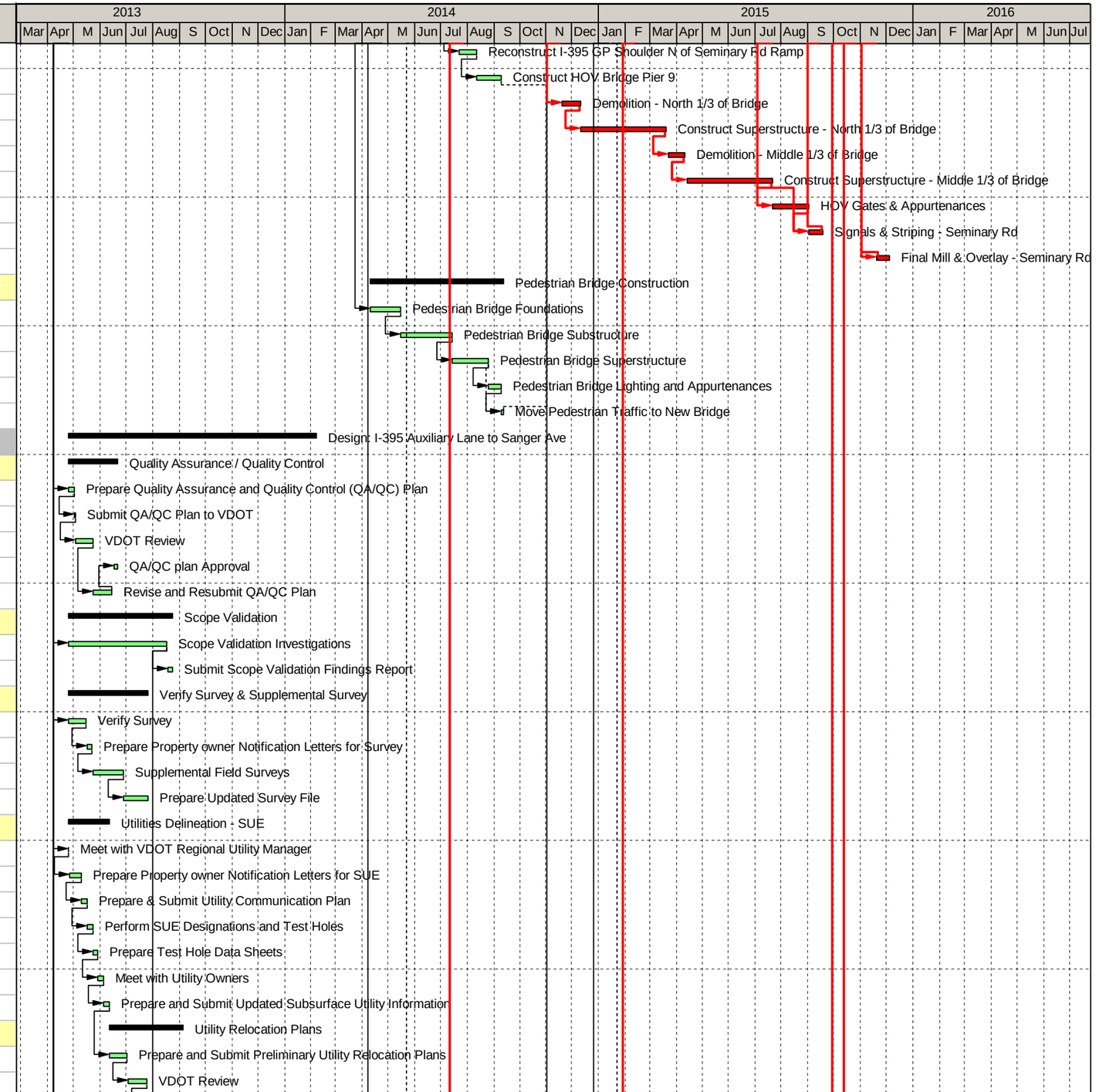

Remaining Level of Effort
Actual Level of Effort
Actual Work
Remaining Work
Critical Remaining Work
Milestone
Summary

Virginia Department of Transportation
Proposal Schedule
January 9, 2013

I-395 HOV Ramp at Seminary Road
I-395 NB Auxiliary Lane
Alexandria, Virginia

PARSONS

Activity ID	Activity Name	Original Duration	Start	Finish
A1740	Prepare and Submit Final Utility Relocation Plans	15d	25-Jul-13	14-Aug-13
A1750	Written Approval from VDOT to Commence Relocations	15d	15-Aug-13	05-Sep-13
Noise Analysis		151d	25-Apr-13	26-Nov-13
A1760	Receive Existing TNM Models from VDOT	1d	25-Apr-13	25-Apr-13
A1770	Evaluate Existing TNM files	15d	26-Apr-13	16-May-13
A1780	Obtain Supplemental Study Data	20d	17-May-13	14-Jun-13
A1790	Incorporate Proposed Alignments in Noise Model and Evaluate	15d	17-Jun-13	08-Jul-13
A1800	Develop Noise Abatement Design Report (NADR) and Submit	15d	09-Jul-13	29-Jul-13
A1810	VDOT Review and Comment	15d	30-Jul-13	19-Aug-13
A1820	Resubmit Final NADR and Model for walls along NB Lanes	10d	20-Aug-13	03-Sep-13
A1830	Receive VDOT Concurrence on NADR	15d	04-Sep-13	24-Sep-13
A1840	Final NADR and Submit plans for noise walls along SB lanes	45d	04-Sep-13	05-Nov-13
A1850	Conduct Public Meeting/citizen survey for Walls along SB Lanes	15d	06-Nov-13	26-Nov-13
Geotechnical Design		90d	25-Apr-13	30-Aug-13
A1860	Prepare Property Owner Notification Letters for Geotechnical Inv...	5d	25-Apr-13	01-May-13
A1870	Submit Subsurface Exploration Plan	5d	02-May-13	08-May-13
A1880	VDOT Review	15d	09-May-13	30-May-13
A1890	Subsurface Investigations/ Pavement Check	15d	31-May-13	20-Jun-13
A1900	Boring Logs and Lab Work	10d	21-Jun-13	05-Jul-13
A1910	Geotech Development of Design Memorandums	15d	08-Jul-13	26-Jul-13
A1920	Complete and Submit Final Geotechnical Report	5d	29-Jul-13	02-Aug-13
A1930	VDOT Review-Final Geotechnical Data Report, Resolution Meet...	15d	05-Aug-13	23-Aug-13
A1940	Final Geotechnical Data Report	5d	26-Aug-13	30-Aug-13
Drainage Design / SWM		80d	25-Apr-13	16-Aug-13
A1950	Drainage Design, MS 19 Analysis	20d	25-Apr-13	22-May-13
A1960	SWM Design & Post Construction SWM Plan	5d	23-May-13	30-May-13
A1970	50% Drainage, SWM and ESC Plans and Submittal	5d	31-May-13	06-Jun-13
A1980	VDOT Review of 50% Drainage, SWM & ESC	15d	07-Jun-13	27-Jun-13
A1990	Multi-Phased ESC Plans & Narrative & SWPPP	5d	28-Jun-13	05-Jul-13
A2000	Final Drainage, SWM and ESCP Plans and Modification VSMP/...	15d	08-Jul-13	26-Jul-13
A2010	VDOT Review and Approval Final SWM, Drainage, DCR VSMP...	15d	29-Jul-13	16-Aug-13
Preliminary Roadway Designs / ROW Plans		110d	25-Apr-13	30-Sep-13
A2240	Horizontal and Vertical Geometry, SE, Typical Sections	25d	25-Apr-13	30-May-13
A2250	Submit Preliminary Field Inspection (PFI) Plans	5d	31-May-13	06-Jun-13
A2260	VDOT Review	15d	07-Jun-13	27-Jun-13
A2270	Cross Sections and Limits of Disturbance	15d	28-Jun-13	19-Jul-13
A2280	Identify ROW, Perm & Temp Easements, and Utility Easements	5d	22-Jul-13	26-Jul-13
A2290	Develop and Submit Right of Way Plans	5d	19-Aug-13	23-Aug-13
A2300	VDOT Review- Right of Way Plans	15d	26-Aug-13	16-Sep-13
A2310	Address Review Comments and Submit Final Right of Way Plans	10d	17-Sep-13	30-Sep-13
A2320	Approved Right of Way Plans	0d		30-Sep-13

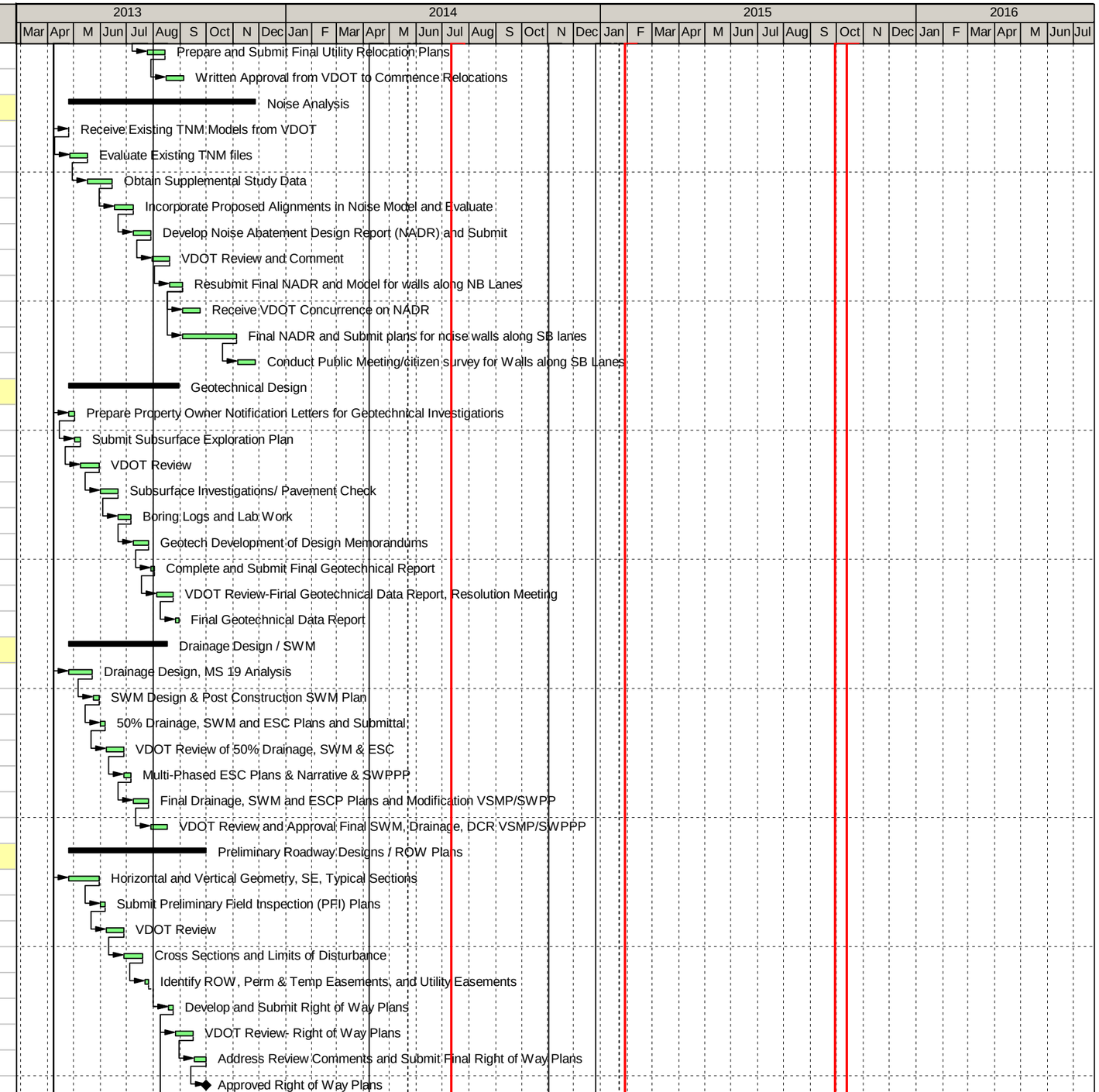

Remaining Level of Effort
Actual Level of Effort
Actual Work
Remaining Work
Critical Remaining Work
Milestone
Summary

Virginia Department of Transportation
Proposal Schedule
January 9, 2013

I-395 HOV Ramp at Seminary Road
I-395 NB Auxiliary Lane
Alexandria, Virginia

PARSONS

Activity ID	Activity Name	Original Duration	Start	Finish
Temporary Traffic Control		90d	25-Apr-13	30-Aug-13
A2180	Preliminary Transportation Management Plan (TMP)	20d	25-Apr-13	22-May-13
A2190	Preliminary Temporary Traffic Control Plans	30d	25-Apr-13	06-Jun-13
A2200	VDOT Review	15d	07-Jun-13	27-Jun-13
A2210	Final Transportation Management Plan (TMP)	20d	28-Jun-13	26-Jul-13
A2220	Final Temporary Traffic Control Plans	30d	28-Jun-13	09-Aug-13
A2230	VDOT Review	15d	12-Aug-13	30-Aug-13
Traffic Control Devices/Lighting/ITS		75d	25-Apr-13	09-Aug-13
A2110	Develop Existing Sign Inventory Plan	10d	25-Apr-13	08-May-13
A2120	Lighting Warrant Analysis and Report	10d	25-Apr-13	08-May-13
A2130	ITS Design and Communication Plan Development	15d	25-Apr-13	15-May-13
A2140	Prepare and Submit Preliminary Traffic, Lighting, and ITS Plans	10d	16-May-13	30-May-13
A2150	VDOT Review	15d	31-May-13	20-Jun-13
A2160	Final Traffic, Lighting, and ITS Plans	20d	21-Jun-13	19-Jul-13
A2170	VDOT Review	15d	22-Jul-13	09-Aug-13
Final Roadway Design		115d	26-Aug-13	06-Feb-14
A2020	Final Horizontal and Vertical Geometry, SE, Typical Sections	30d	26-Aug-13	07-Oct-13
A2030	Final Cross Sections	10d	08-Oct-13	21-Oct-13
A2040	Final Retaining Walls	10d	22-Oct-13	04-Nov-13
A2050	Roadway Incidentals and Details	10d	22-Oct-13	04-Nov-13
A2060	Roadway Plans and Submittal-Construction Plans	15d	05-Nov-13	25-Nov-13
A2070	VDOT Review	15d	26-Nov-13	17-Dec-13
A2080	Address Review Comments and Submit Construction Plans	15d	18-Dec-13	09-Jan-14
A2090	VDOT Review and Approval	20d	10-Jan-14	06-Feb-14
A2100	Released for Construction Plans- I-395 NB Widening/ Ramps	0d		06-Feb-14
Construction: I-395 Auxiliary Lane to Sanger Avenue		386d	25-Apr-14	29-Oct-15
I-395 Northbound Widening		386d	25-Apr-14	29-Oct-15
A1232	Clearing & Demolition	10d	25-Apr-14	08-May-14
A1260	Construct RW-2 (MSE)	30d	29-Jul-14	09-Sep-14
A1270	Construct RW-1 (MSE)	50d	10-Sep-14	18-Nov-14
A1282	Construct Full Depth Widening	35d	19-Nov-14	09-Jan-15
A1370	Construct Noise Barrier #3	20d	12-Jan-15	06-Feb-15
A1372	Shift NB I-395 Eastward	5d	09-Feb-15	13-Feb-15
A1522	Barrier Wall & Guardrail	10d	16-Feb-15	27-Feb-15
A1532	Final Mill & Overlay	10d	16-Oct-15	29-Oct-15

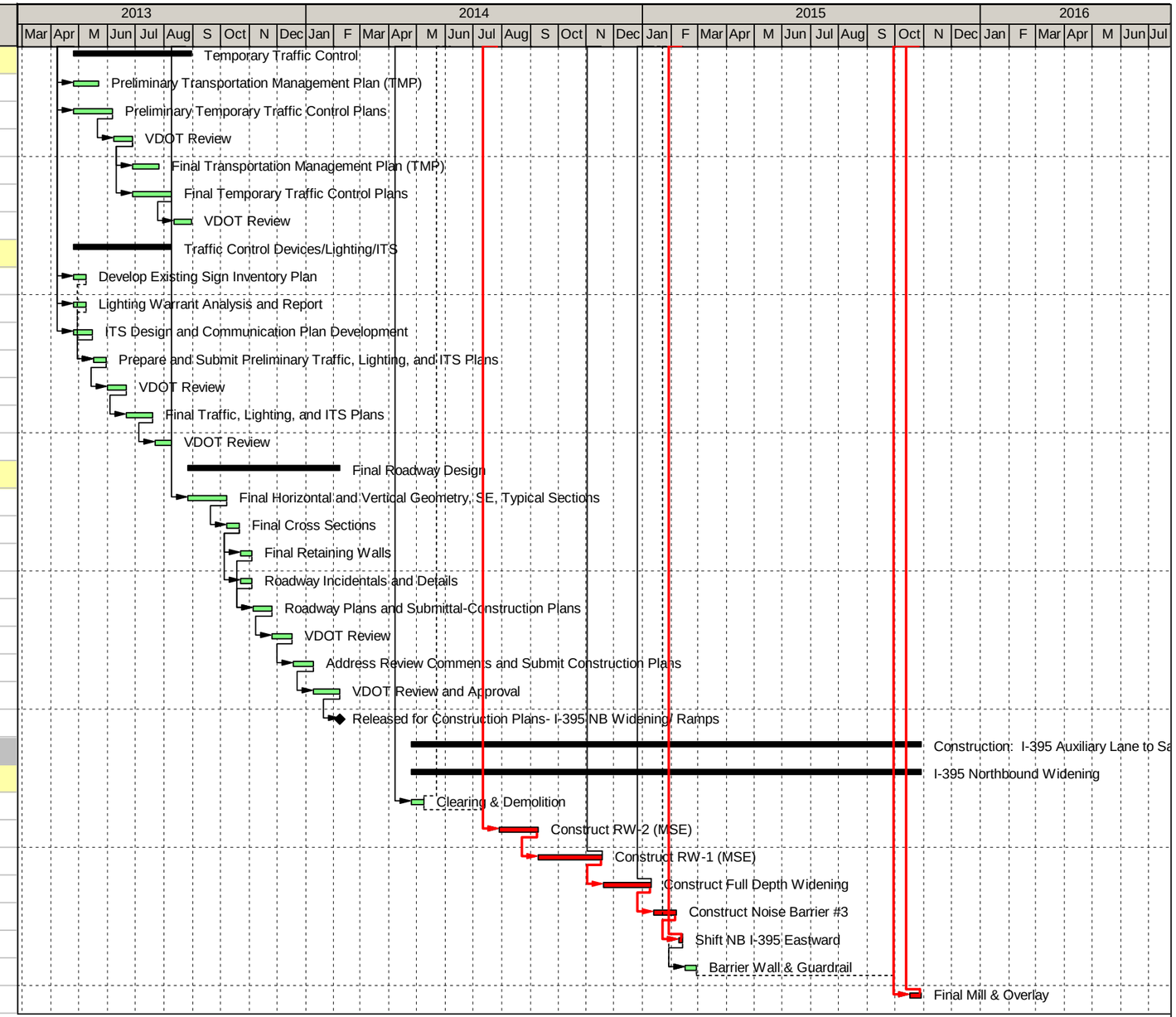

Remaining Level of Effort
Actual Level of Effort
Actual Work
Remaining Work
Critical Remaining Work
Milestone
Summary

Virginia Department of Transportation
Proposal Schedule
January 9, 2013

I-395 HOV Ramp at Seminary Road
I-395 NB Auxiliary Lane
Alexandria, Virginia

PARSONS

Schedule A

Activity ID	Activity Name	Original Duration	Start	Finish
VDOT I-395 HOV Ramp		727d	13-Feb-13	18-Dec-15
Milestones & Procurement		727d	13-Feb-13	18-Dec-15
A1000	Price Proposal Submission	0d	13-Feb-13*	
A1010	Notice to Proceed	0d	25-Apr-13*	
A1020	Interim Milestone (Open HOV Ramp)	0d		24-Sep-15*
A1030	Substantial/Final Completion	0d		18-Dec-15*
A1510	Complete Punchlist Items	20d	20-Nov-15	18-Dec-15
Design: I-395 HOV Ramp		245d	25-Apr-13	10-Apr-14
A1040	Design Complete / Start Construction	0d		10-Apr-14
Quality Assurance / Quality Control		41d	25-Apr-13	21-Jun-13
A2330	Prepare Quality Assurance and Quality Control (QA/QC) Plan	5d	25-Apr-13	01-May-13
A2340	Submit QA/QC Plan to VDOT	1d	02-May-13	02-May-13
A2350	VDOT Review	15d	03-May-13	23-May-13
A2360	QA/QC plan Approval	5d	17-Jun-13	21-Jun-13
A2370	Revise and Resubmit QA/QC Plan	15d	24-May-13	14-Jun-13
Scope Validation		85d	25-Apr-13	23-Aug-13
A2380	Scope Validation Investigations	80d	25-Apr-13	16-Aug-13
A2390	Submit Scope Validation Findings Report	5d	19-Aug-13	23-Aug-13
Verify Survey & Supplemental Survey		65d	25-Apr-13	26-Jul-13
A2400	Verify Survey	15d	25-Apr-13	15-May-13
A2410	Prepare Property owner Notification Letters for Survey	5d	16-May-13	22-May-13
A2420	Supplemental Field Surveys	25d	23-May-13	27-Jun-13
A2430	Prepare Updated Survey File	20d	28-Jun-13	26-Jul-13
Utilities Delineation - SUE		33d	25-Apr-13	11-Jun-13
A2440	Meet with VDOT Regional Utility Manager	1d	25-Apr-13	25-Apr-13
A2450	Prepare Property owner Notification Letters for SUE	10d	26-Apr-13	09-May-13
A2460	Prepare & Submit Utility Communication Plan	5d	10-May-13	16-May-13
A2470	Perform SUE Designations and Test Holes	5d	17-May-13	23-May-13
A2480	Prepare Test Hole Data Sheets	2d	24-May-13	28-May-13
A2490	Meet with Utility Owners	5d	29-May-13	04-Jun-13
A2500	Prepare and Submit Updated Subsurface Utility Information	5d	05-Jun-13	11-Jun-13
Utility Relocation Plans		70d	12-Jun-13	19-Sep-13
A2510	Prepare and Submit Preliminary Utility Relocation Plans	20d	12-Jun-13	10-Jul-13
A2520	VDOT Review	15d	11-Jul-13	31-Jul-13
A2530	Prepare and Submit Final Utility Relocation Plans	20d	01-Aug-13	28-Aug-13
A2540	Written Approval from VDOT to Commence Relocations	15d	29-Aug-13	19-Sep-13
Noise Analysis		106d	25-Apr-13	24-Sep-13

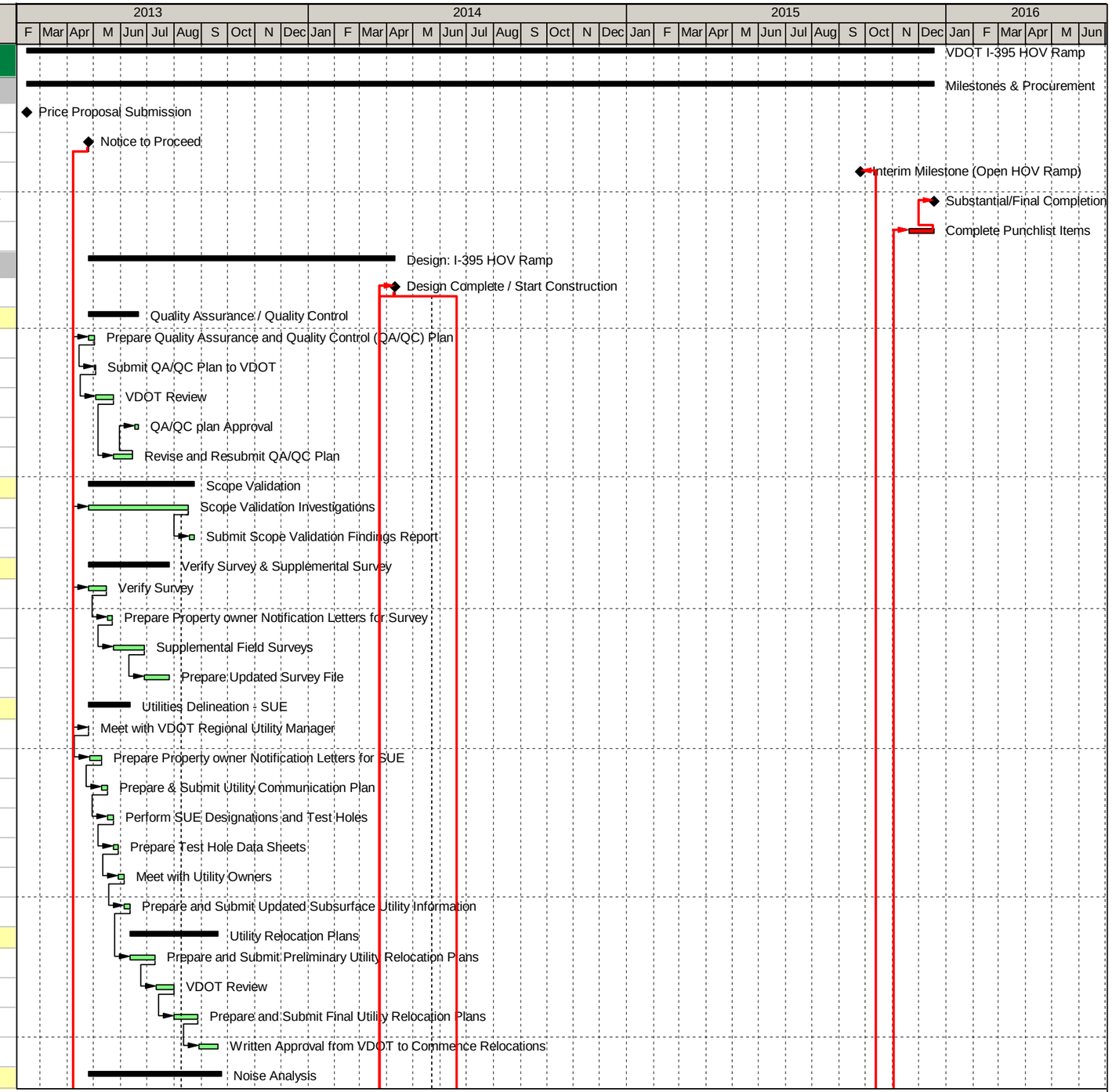

Remaining Level of Effort
Actual Level of Effort
Actual Work
Remaining Work
Critical Remaining Work
Milestone
Summary

Virginia Department of Transportation
Proposal Schedule A
January 9, 2013

I-395 HOV Ramp at Seminary Road
Alexandria, Virginia

PARSONS

Activity ID	Activity Name	Original Duration	Start	Finish
A2550	Receive Existing TNM Models from VDOT	1d	25-Apr-13	25-Apr-13
A2560	Evaluate Existing TNM files	15d	26-Apr-13	16-May-13
A2570	Obtain Supplemental Study Data	20d	17-May-13	14-Jun-13
A2580	Incorporate Proposed Alignments in Noise Model and Evaluate	15d	17-Jun-13	08-Jul-13
A2590	Develop Noise Abatement Design Report (NADR) and Submit	15d	09-Jul-13	29-Jul-13
A2600	VDOT Review and Comment	15d	30-Jul-13	19-Aug-13
A2610	Resubmit Final NADR and Model for walls along NB Lanes	10d	20-Aug-13	03-Sep-13
A2620	Receive VDOT Concurrence on NADR	15d	04-Sep-13	24-Sep-13
Geotechnical Design		90d	25-Apr-13	30-Aug-13
A2650	Prepare Property Owner Notification Letters for Geotechnical Investigations	5d	25-Apr-13	01-May-13
A2660	Submit Subsurface Exploration Plan	5d	02-May-13	08-May-13
A2670	VDOT Review	15d	09-May-13	30-May-13
A2680	Subsurface Investigations/ Pavement Check	15d	31-May-13	20-Jun-13
A2690	Boring Logs and Lab Work	10d	21-Jun-13	05-Jul-13
A2700	Geotech Development of Design Memorandums	15d	08-Jul-13	26-Jul-13
A2710	Complete and Submit Final Geotechnical Report	5d	29-Jul-13	02-Aug-13
A2720	VDOT Review-Final Geotechnical Data Report, Resolution Meeting	15d	05-Aug-13	23-Aug-13
A2730	Final Geotechnical Data Report	5d	26-Aug-13	30-Aug-13
Drainage Design / SWM		145d	25-Apr-13	18-Nov-13
A2740	Drainage Design, MS 19 Analysis	40d	25-Apr-13	20-Jun-13
A2750	SWM Design & Post Construction SWM Plan	20d	21-Jun-13	19-Jul-13
A2760	50% Drainage, SWM and ESC Plans and Submittal	15d	22-Jul-13	09-Aug-13
A2770	VDOT Review of 50% Drainage, SWM & ESC	15d	12-Aug-13	30-Aug-13
A2780	Multi-Phased ESC Plans & Narrative & SWPPP	20d	03-Sep-13	30-Sep-13
A2790	Final Drainage, SWM and ESCP Plans and Modification VSMP/SWPP Permit	20d	01-Oct-13	28-Oct-13
A2800	VDOT Review and Approval Final SWM, Drainage, DCR VSMP/SWPPP Permit Mod	15d	29-Oct-13	18-Nov-13
Preliminary Roadway Designs / ROW Plans		125d	25-Apr-13	21-Oct-13
A3030	Horizontal and Vertical Geometry, SE, Typical Sections	30d	25-Apr-13	06-Jun-13
A3040	Submit Preliminary Field Inspection (PFI) Plans	5d	07-Jun-13	13-Jun-13
A3050	VDOT Review - PFI Plans	15d	14-Jun-13	05-Jul-13
A3060	Cross Sections and Limits of Disturbance	30d	14-Jun-13	26-Jul-13
A3070	Identify ROW, Perm & Temp Easements, and Utility Easements	20d	29-Jul-13	23-Aug-13
A3080	Develop and Submit Right of Way Plans	15d	26-Aug-13	16-Sep-13
A3090	VDOT Review- Right of Way Plans	15d	17-Sep-13	07-Oct-13
A3100	Address Review Comments and Submit Final Right of Way Plans	10d	08-Oct-13	21-Oct-13
A3110	Approved Right of Way Plans	0d		21-Oct-13
Right of Way & Acquisitions		107d	22-Oct-13	24-Mar-14

Remaining Level of Effort
Actual Level of Effort
Actual Work
Remaining Work
Critical Remaining Work
Milestone
Summary

Virginia Department of Transportation
Proposal Schedule A
January 9, 2013

I-395 HOV Ramp at Seminary Road
Alexandria, Virginia

PARSONS

Activity ID	Activity Name	Original Duration	Start	Finish
A3120	VDOT Issue Notice to Commence ROW	1d	22-Oct-13	22-Oct-13
A3130	Prepare and Submit Acquisition and Relocation Plan	21d	23-Oct-13	20-Nov-13
A3140	VDOT Review and Approve Acquisition and Relocation Plan	15d	21-Nov-13	12-Dec-13
A3150	Appraisals, Appraisal Review (incl. VDOT Approval) Titles, Report	30d	13-Dec-13	27-Jan-14
A3160	Property Acquisitions	40d	28-Jan-14	24-Mar-14
Temporary Traffic Control		150d	25-Apr-13	25-Nov-13
A2970	Preliminary Transportation Management Plan (TMP)	21d	25-Apr-13	23-May-13
A2980	Preliminary Temporary Traffic Control Plans	60d	25-Apr-13	19-Jul-13
A2990	VDOT Review	15d	22-Jul-13	09-Aug-13
A3000	Final Transportation Management Plan (TMP)	21d	12-Aug-13	10-Sep-13
A3010	Final Temporary Traffic Control Plans	60d	12-Aug-13	04-Nov-13
A3020	VDOT Review	15d	05-Nov-13	25-Nov-13
Traffic Control Devices/Lighting/ITS		105d	25-Apr-13	23-Sep-13
A2900	Develop Existing Sign Inventory Plan	10d	25-Apr-13	08-May-13
A2910	Lighting Warrant Analysis and Report	10d	25-Apr-13	08-May-13
A2920	ITS Design and Communication Plan Development	15d	25-Apr-13	15-May-13
A2930	Prepare and Submit Preliminary Traffic, Lighting, and ITS Plans	30d	16-May-13	27-Jun-13
A2940	VDOT Review	15d	28-Jun-13	19-Jul-13
A2950	Final Traffic, Lighting, and ITS Plans	30d	22-Jul-13	30-Aug-13
A2960	VDOT Review	15d	03-Sep-13	23-Sep-13
Pedestrian Bridge Design (Package 1a)		185d	25-Apr-13	16-Jan-14
A2810	Preliminary Bridge Design	60d	25-Apr-13	19-Jul-13
A2820	Submit Preliminary Plans	10d	22-Jul-13	02-Aug-13
A2830	Receive VDOT Review Comments and Approval for Final Design	15d	05-Aug-13	23-Aug-13
A2840	Design and Submit 90% Structure Plans	70d	05-Aug-13	11-Nov-13
A2850	VDOT Review	15d	12-Nov-13	03-Dec-13
A2860	Final Structure Plans	15d	04-Dec-13	24-Dec-13
A2870	VDOT Review and Final Approval	15d	26-Dec-13	16-Jan-14
A2880	Approved Plans for Construction- Pedestrian Bridge	0d		16-Jan-14
Seminary Rd Bridge Design (Package 1b)		185d	25-Apr-13	16-Jan-14
A3170	Preliminary Bridge Design	60d	25-Apr-13	19-Jul-13
A3180	Submit Preliminary Plans	5d	22-Jul-13	26-Jul-13
A3190	Receive VDOT Review Comments and Approval for Final Design	15d	29-Jul-13	16-Aug-13
A3200	Design and Submit 90% Structure Plans	70d	29-Jul-13	04-Nov-13
A3210	VDOT Review	15d	05-Nov-13	25-Nov-13
A3220	Submit Final Structure Plans	20d	26-Nov-13	24-Dec-13
A3230	VDOT Review and Final Approval	15d	26-Dec-13	16-Jan-14

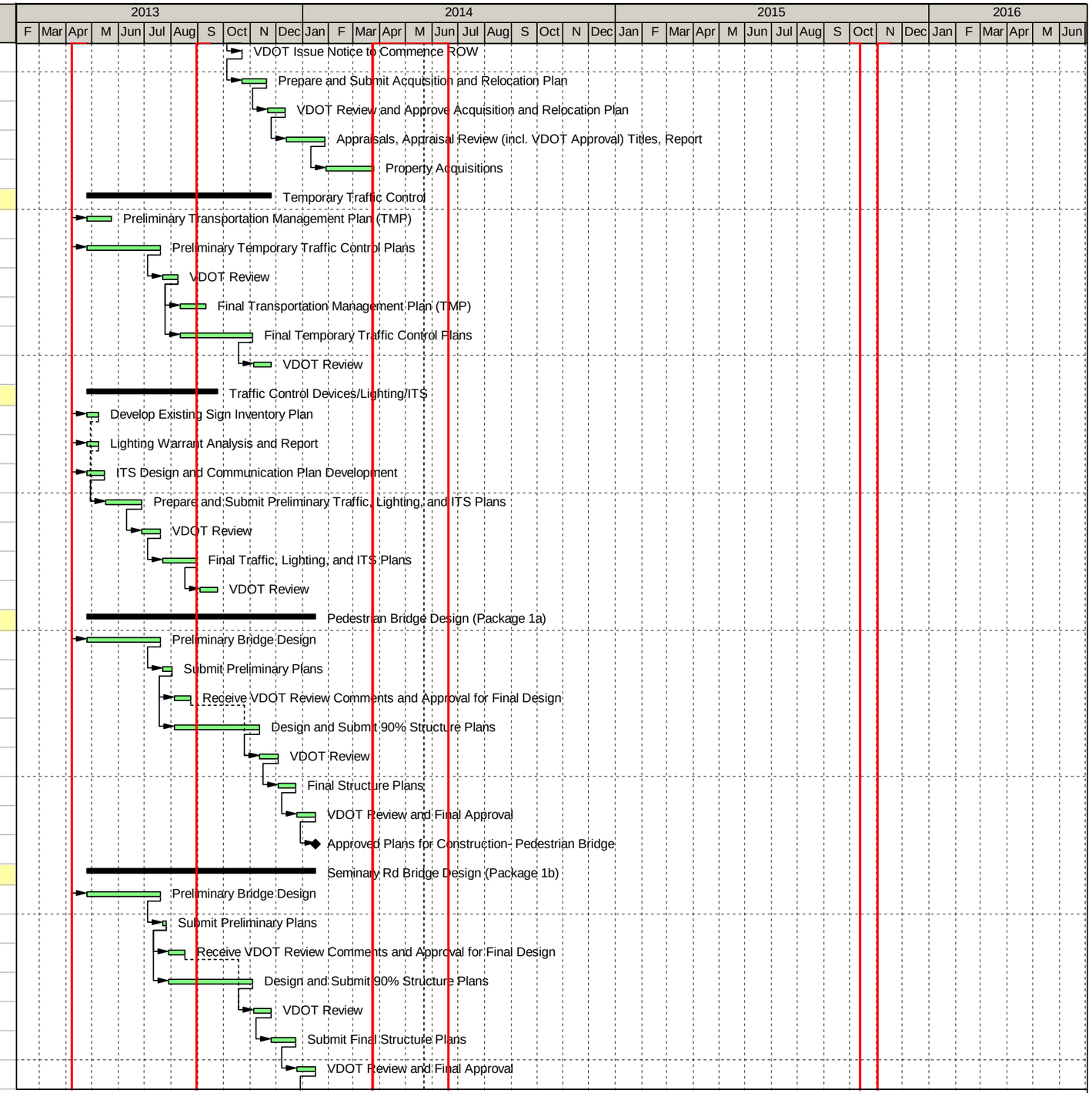

Remaining Level of Effort
Actual Level of Effort
Actual Work
Remaining Work
Critical Remaining Work
Milestone
Summary

Virginia Department of Transportation
Proposal Schedule A
January 9, 2013

I-395 HOV Ramp at Seminary Road
Alexandria, Virginia

PARSONS

Activity ID	Activity Name	Original Duration	Start	Finish
A3240	Approved Plans for Construction- Seminary Rd Bridge	0d		16-Jan-14
I-395 NB Widening/Seminary Ramp - Grading & EC (Package 1c)		80d	17-Sep-13	09-Jan-14
A3530	Final Horizontal and Vertical Geometry, SE, Typical Sections	10d	17-Sep-13	30-Sep-13
A3540	Final Grading Limits	10d	01-Oct-13	14-Oct-13
A3550	Final Erosion Control Measures	10d	01-Oct-13	14-Oct-13
A3560	Roadway Plans and Submittal- Construction Plans	15d	15-Oct-13	04-Nov-13
A3570	VDOT Review	15d	05-Nov-13	25-Nov-13
A3580	Address Review Comments and Submit Construction Plans	15d	26-Nov-13	17-Dec-13
A3590	VDOT Review and Approval	15d	18-Dec-13	09-Jan-14
A3600	Released for Construction Plans- Grading & Erosion Control	0d		09-Jan-14
I-395 Widening/Seminary Ramp - Final Roadway Design (Package...		100d	01-Oct-13	20-Feb-14
A3610	Final Cross Sections	15d	01-Oct-13	21-Oct-13
A3620	Final Retaining Walls	15d	22-Oct-13	11-Nov-13
A3630	Roadway Incidentals and Details	20d	22-Oct-13	18-Nov-13
A3640	Roadway Plans and Submittal- Construction Plans	15d	19-Nov-13	10-Dec-13
A3650	VDOT Review	15d	11-Dec-13	02-Jan-14
A3660	Address Review Comments and Submit Construction Plans	20d	03-Jan-14	30-Jan-14
A3670	VDOT Review and Approval	15d	31-Jan-14	20-Feb-14
A3680	Released for Construction Plans- I395 NB Widening/Seminary Ramp	0d		20-Feb-14
Sanger Ave Bridge Design (Package 2b)		205d	25-Apr-13	13-Feb-14
A3250	Preliminary Bridge Design	60d	25-Apr-13	19-Jul-13
A3260	Submit Preliminary Plans	10d	22-Jul-13	02-Aug-13
A3270	Receive VDOT Review Comments and Approval for Final Design	15d	05-Aug-13	23-Aug-13
A3280	Final Superstructure Design and Plans	70d	05-Aug-13	11-Nov-13
A3290	Final Foundation Design, Plans & Structure Report	70d	05-Aug-13	11-Nov-13
A3300	Submit 90% Superstructure and Substructure Plans	15d	12-Nov-13	03-Dec-13
A3310	VDOT Review	15d	04-Dec-13	24-Dec-13
A3320	Submit Final Structure Plans	20d	26-Dec-13	23-Jan-14
A3330	VDOT Review and Final Approval	15d	24-Jan-14	13-Feb-14
A3340	Approved Plans for Construction- Sanger Avenue Bridge	0d		13-Feb-14
I-395 HOV Ramp - Final Roadway Design (Package 3a)		145d	17-Sep-13	10-Apr-14
A3450	Final Horizontal and Vertical Geometry, SE, Typical Sections	45d	17-Sep-13	18-Nov-13
A3460	Final Cross Sections	30d	19-Nov-13	02-Jan-14
A3470	Roadway Incidentals and Details	30d	19-Nov-13	02-Jan-14
A3480	Roadway Plans and Submittal- Construction Plans	10d	03-Jan-14	16-Jan-14
A3490	VDOT Review	15d	17-Jan-14	06-Feb-14
A3500	Address Review Comments and Submit Construction Plans	30d	07-Feb-14	20-Mar-14

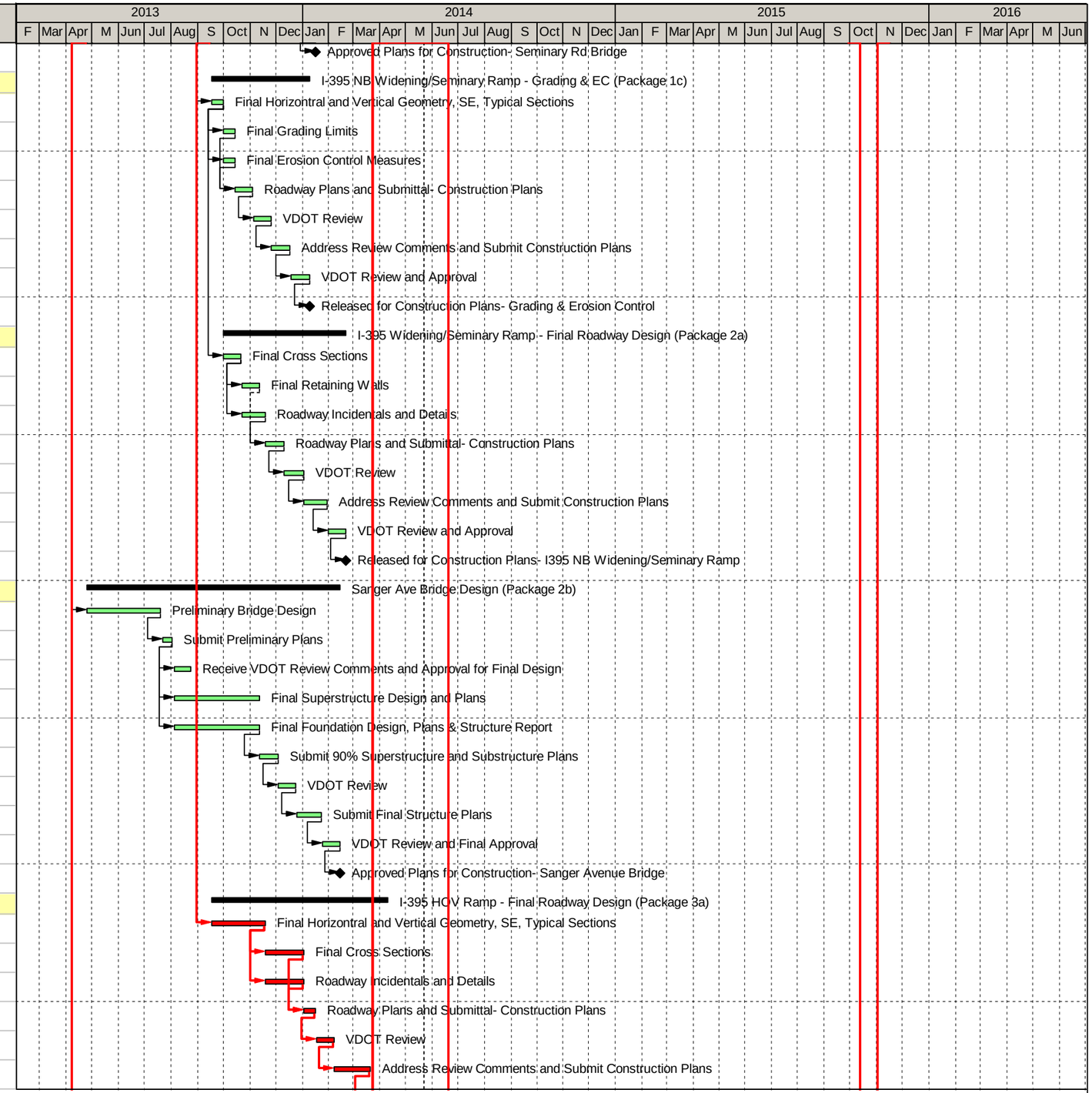

Remaining Level of Effort
Actual Level of Effort
Actual Work
Remaining Work
Critical Remaining Work
Milestone
Summary

Virginia Department of Transportation
Proposal Schedule A
January 9, 2013

I-395 HOV Ramp at Seminary Road
Alexandria, Virginia

PARSONS

Activity ID	Activity Name	Original Duration	Start	Finish
A3510	VDOT Review and Approval	15d	21-Mar-14	10-Apr-14
A3520	Released for Construction Plans- I395 HOV Ramp and Incidentals	0d		10-Apr-14
HOV Ramp Bridge Design (Package 3b)		245d	25-Apr-13	10-Apr-14
A3350	Preliminary Bridge Design	60d	25-Apr-13	19-Jul-13
A3360	Submit Preliminary Plans	5d	22-Jul-13	26-Jul-13
A3370	Receive VDOT Review Comments and Approval for Final Design	15d	29-Jul-13	16-Aug-13
A3380	Final Superstructure Design and Plans	100d	29-Jul-13	17-Dec-13
A3390	Final Foundation Design, Plans & Structure Report	100d	29-Jul-13	17-Dec-13
A3400	Submit 90% Superstructure and Substructure Plans	20d	18-Dec-13	16-Jan-14
A3410	VDOT Review	15d	17-Jan-14	06-Feb-14
A3420	Submit Final Structure Plans	30d	07-Feb-14	20-Mar-14
A3430	VDOT Review and Final Approval	15d	21-Mar-14	10-Apr-14
A3440	Approved Plans for Construction- HOV Ramp Bridge	0d		10-Apr-14
Construction: I-395 Sanger Avenue to Seminary Road		401d	11-Apr-14	05-Nov-15
I-395 Seminary Road Off Ramp		401d	11-Apr-14	05-Nov-15
Reconstruct Outside Shoulder & Widening		135d	11-Apr-14	21-Oct-14
A1230	Clearing & Demolition	10d	11-Apr-14	24-Apr-14
A1240	Utility Relocations (GAS, H2O, Conduit)	30d	25-Apr-14	06-Jun-14
A1245	Construct RW-4 (MSE)	10d	09-Jun-14	20-Jun-14
A1250	Construct RW-3 (Soil Nail)	25d	23-Jun-14	28-Jul-14
A1280	Construct Full Depth Widening	25d	29-Jul-14	02-Sep-14
A1350	Construct Noise Barrier #1	20d	03-Sep-14	30-Sep-14
A1520	Barrier Wall & Guardrail	10d	01-Oct-14	14-Oct-14
A1525	Shift NB I-395 eastward	5d	15-Oct-14	21-Oct-14
New HOV Ramp/I-395 Inside Shoulder Reconstruction		266d	22-Oct-14	05-Nov-15
A1380	Construct Fnds, Piers 8 thru 1	25d	22-Oct-14	25-Nov-14
A1390	Construct Substructure, Piers 8 thru 1	50d	26-Nov-14	06-Feb-15
A1400	Construct Superstructure, HOV Bridge	35d	09-Feb-15	27-Mar-15
A1410	Construct MSE Walls RW-5 & RW-6	60d	11-Dec-14	06-Mar-15
A1430	Construct Full Depth Pvmt	40d	09-Mar-15	01-May-15
A1440	Permanent Signage (Ovrhead & Cantilevers)	20d	04-May-15	01-Jun-15
A1470	Shift NB I-395 to Original	5d	02-Jun-15	08-Jun-15
A1475	Barrier Wall & Guardrail	10d	09-Jun-15	22-Jun-15
A1480	Open HOV Bridge	5d	18-Sep-15	24-Sep-15
A1485	Final Mill & Overlay - I-395 NB	15d	16-Oct-15	05-Nov-15
Sanger Ave Bridge Widening (NB)		60d	09-Jun-14	02-Sep-14
A1170	Demo Deck Edge - Sanger Ave Bridge	10d	09-Jun-14	20-Jun-14

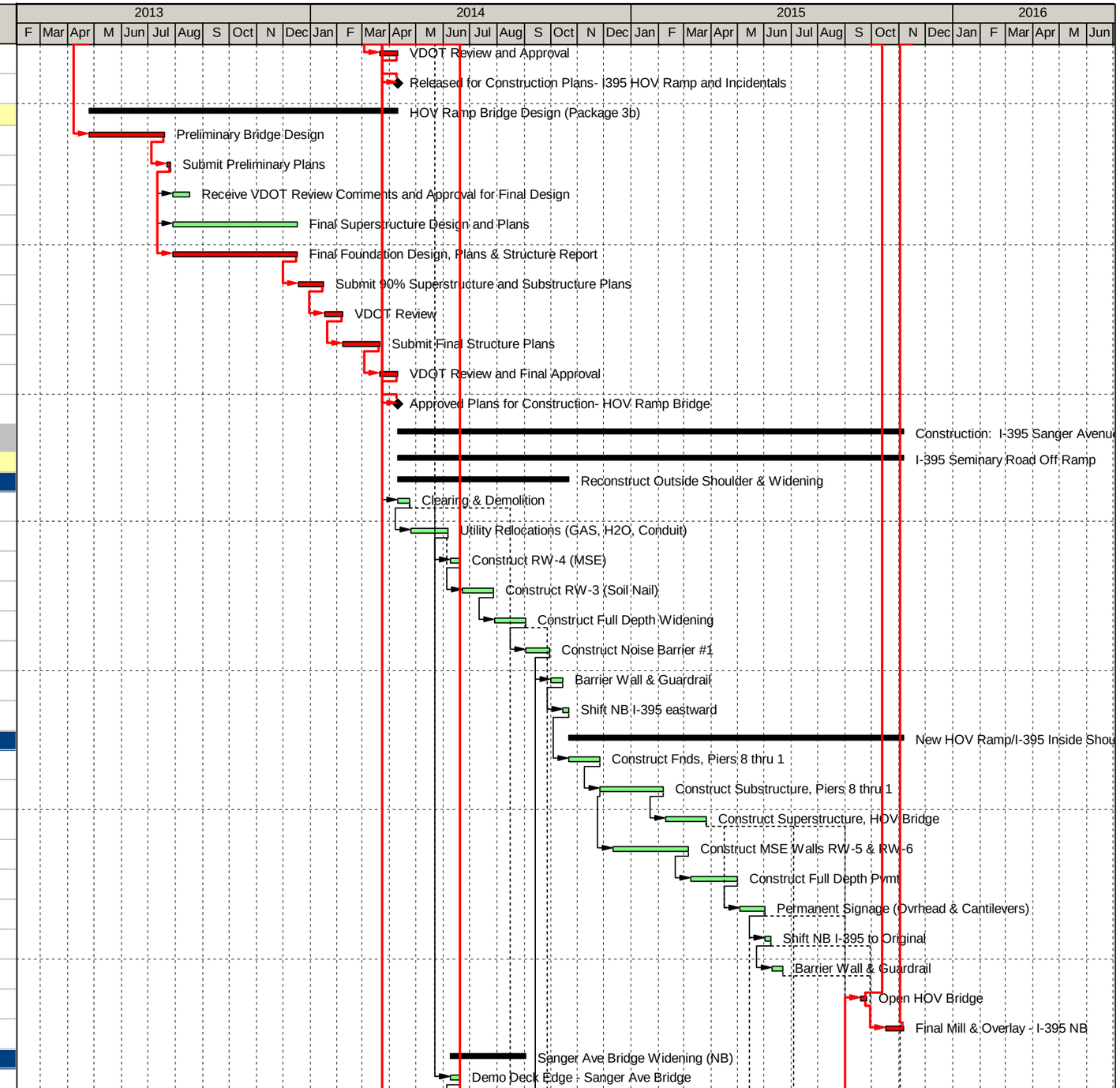

Remaining Level of Effort
Actual Level of Effort
Actual Work
Remaining Work
Critical Remaining Work
Milestone
Summary

Virginia Department of Transportation
Proposal Schedule A
January 9, 2013

I-395 HOV Ramp at Seminary Road
Alexandria, Virginia

PARSONS

Activity ID	Activity Name	Original Duration	Start	Finish
A1180	Construct Abuts & WW - Sanger Ave Bridge NB	25d	23-Jun-14	28-Jul-14
A1190	Construct Superstructure - Sanger Ave NB	25d	29-Jul-14	02-Sep-14
I-395 Southbound Reconstruction		100d	03-Sep-14	23-Jan-15
Noise Barriers		40d	01-Oct-14	25-Nov-14
A1320	Construct Noise Barrier #2	20d	01-Oct-14	28-Oct-14
A1330	Construct Noise Barrier #3	20d	29-Oct-14	25-Nov-14
Sanger Ave Bridge Widening (SB)		100d	03-Sep-14	23-Jan-15
A1200	Narrow Traffic I-395 SB	5d	03-Sep-14	09-Sep-14
A1205	Demo Deck Edge - Sanger Ave Bridge	5d	10-Sep-14	16-Sep-14
A1210	Construct Abuts & WW - Sanger Ave Bridge SB	15d	17-Sep-14	07-Oct-14
A1220	Construct Superstructure - Sanger Ave SB	15d	08-Oct-14	28-Oct-14
A1340	Shift I-395 SB Back to Original Alignment	5d	26-Nov-14	03-Dec-14
A1360	Repaint entire bridge	20d	04-Dec-14	02-Jan-15
A1490	Remove Temp Stripe/Final Mill & Overlay - I-395 SB	15d	05-Jan-15	23-Jan-15
Seminary Road Bridge Reconstruction		366d	11-Apr-14	17-Sep-15
A1062	Fabricate Structural Steel	60d	11-Apr-14	07-Jul-14
A1065	Temp Pavement (Seminary Rd)	10d	08-Jul-14	21-Jul-14
A1070	Demolition - South 1/3 of Bridge	15d	22-Jul-14	11-Aug-14
A1090	Construct Superstructure - South 1/3 of Bridge	70d	12-Aug-14	18-Nov-14
A1095	Reconstruct I-395 GP Shoulder N of Seminary Rd Ramp	15d	22-Jul-14	11-Aug-14
A1100	Construct HOV Bridge Pier 9	20d	12-Aug-14	09-Sep-14
A1105	Demolition - North 1/3 of Bridge	15d	19-Nov-14	10-Dec-14
A1110	Construct Superstructure - North 1/3 of Bridge	70d	11-Dec-14	20-Mar-15
A1120	Demolition - Middle 1/3 of Bridge	15d	23-Mar-15	10-Apr-15
A1130	Construct Superstructure - Middle 1/3 of Bridge	70d	13-Apr-15	21-Jul-15
A1135	HOV Gates & Appurtenances	30d	22-Jul-15	01-Sep-15
A1450	Signals & Striping - Seminary Rd	11d	02-Sep-15	17-Sep-15
A1500	Final Mill & Overlay - Seminary Rd	10d	23-Mar-15	03-Apr-15
Pedestrian Bridge Construction		108d	11-Apr-14	12-Sep-14
A1140	Pedestrian Bridge Foundations	25d	11-Apr-14	15-May-14
A1150	Pedestrian Bridge Substructure	40d	16-May-14	14-Jul-14
A1155	Pedestrian Bridge Superstructure	30d	15-Jul-14	25-Aug-14
A1160	Pedestrian Bridge Lighting and Appurtenances	10d	26-Aug-14	09-Sep-14
A1165	Move Pedestrian Traffic to New Bridge	3d	10-Sep-14	12-Sep-14

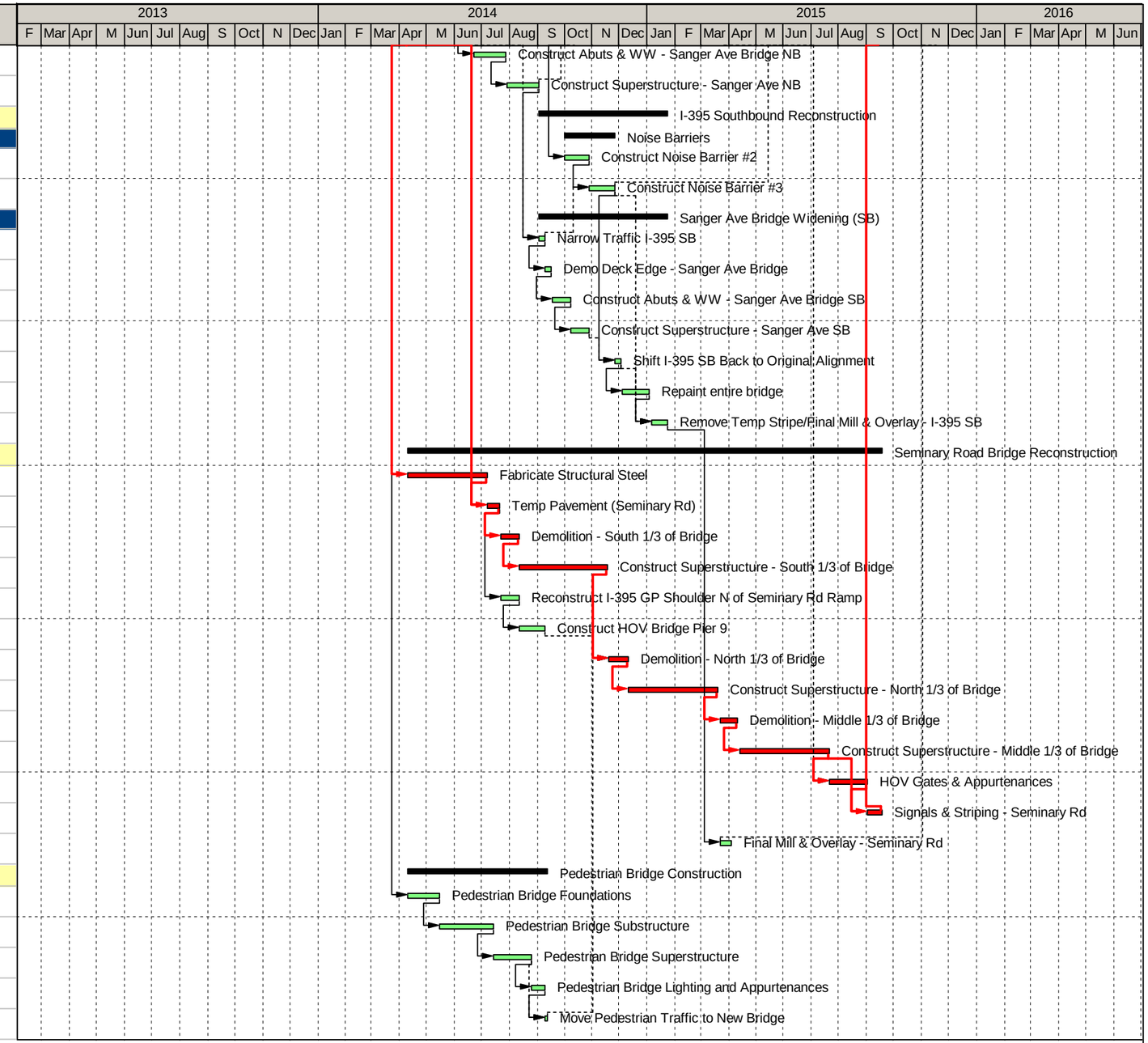

Remaining Level of Effort
Actual Level of Effort
Actual Work
Remaining Work
Critical Remaining Work
Milestone
Summary

Virginia Department of Transportation
Proposal Schedule A
January 9, 2013

I-395 HOV Ramp at Seminary Road
Alexandria, Virginia

PARSONS

VDOT
Virginia Department of Transportation

in association with
PARSONS

Technical Proposal-Volume II

I-395 HOV RAMP AT SEMINARY ROAD AND I-395 NB AUXILIARY LANE EXTENSION

State Project No.: 0395-100-722, 0395-100-736
Federal Project No.: IM-5A01(362)
Contract ID Number: C00096261DB50

1/3/2013
2:28:08 AM

PROJECT MANAGER Archer Western Construction LLC.
SURVEYED BY Archer Western Construction LLC.
DESIGN SUPERVISED BY Parsons Transportation Group
DESIGNED BY Parsons Transportation Group

THESE PLANS ARE UNFINISHED AND UNAPPROVED AND ARE NOT TO BE USED FOR ANY TYPE OF CONSTRUCTION OR THE ACQUISITION OF RIGHT OF WAY.

REVISED	STATE	STATE ROUTE	STATE PROJECT	SHEET NO.
	VA.	395	0395-100-722/ 736 C501	01

DESIGN FEATURES RELATING TO CONSTRUCTION OR TO REGULATION AND CONTROL OF TRAFFIC MAY BE SUBJECT TO CHANGE AS DEEMED NECESSARY BY THE DEPARTMENT

I-395 NB MAINLINE

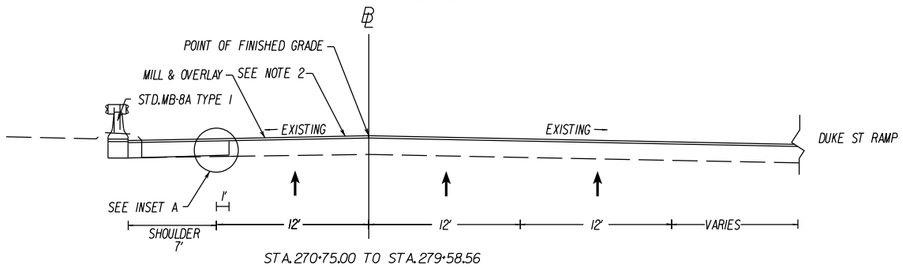

STA.270+75.00 TO STA.279+58.56

I-395 NB MAINLINE

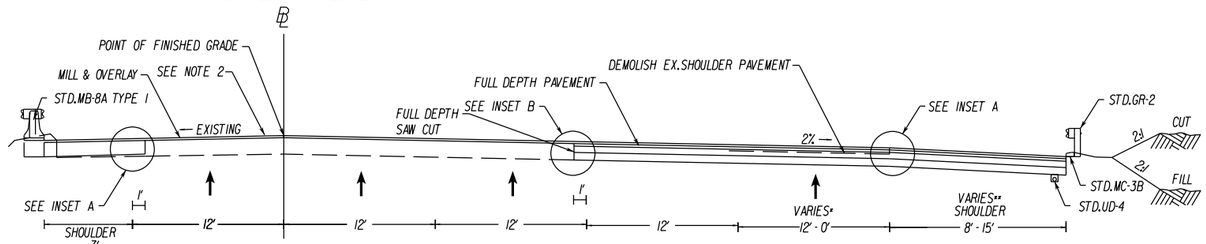

STA.279+58.56 TO STA.284+00.00

* 12' TO 0' TAPER FROM STA.281+00.00 TO STA.284+00.00

** 8' TO 15' TAPER FROM STA.281+00.00 TO STA.284+00.00

I-395 NB MAINLINE

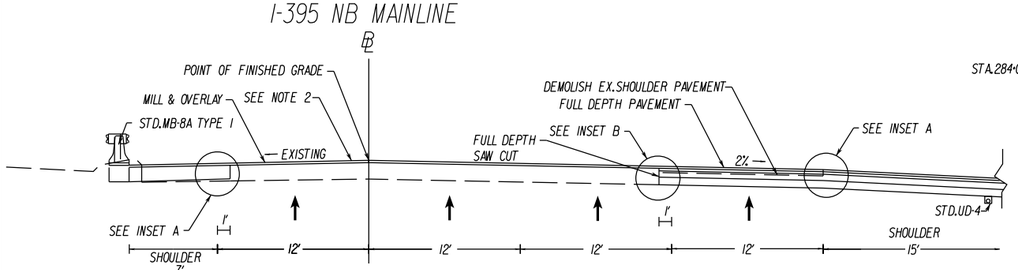

STA.284+00.00 TO STA.303+75.00

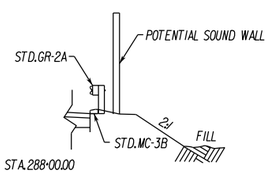

STA.284+00.00 TO STA.288+00.00

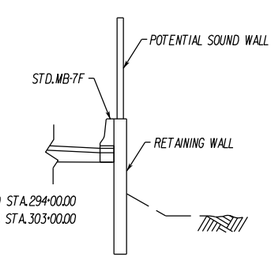

STA.288+00.00 TO STA.294+00.00
STA.297+75.00 TO STA.303+00.00

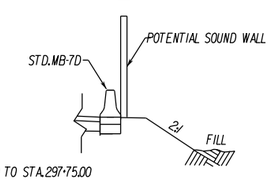

STA.294+00.00 TO STA.297+75.00
STA.303+00.00 TO STA.303+75.00

DUKE ST RAMP

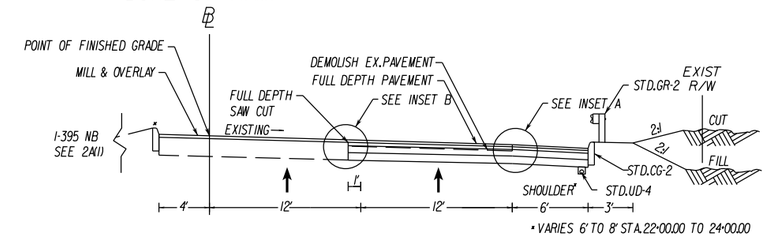

* VARIES 6' TO 8' STA.22+00.00 TO 24+00.00

STA.11+00.00 TO STA.24+00.00

* CURB FROM STA.13+60.00 TO STA.16+35.00

DUKE ST RAMP

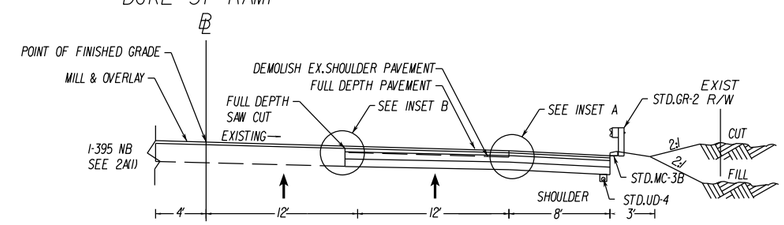

STA.24+00.00 TO STA.24+67.79

INSET A

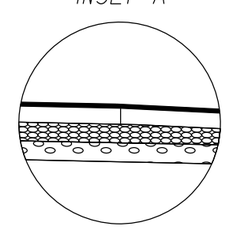

INSET B

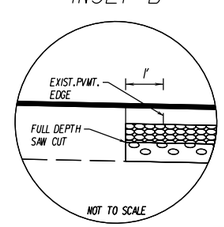

NOTES:

1. FOR THE LIMITS OF MILL AND OVERLAY AND FULL DETH PAVEMENT, REFER TO PLAN SHEETS.
2. REFER TO GEOTEHCNICAL ENGINEERING DATA REPORT FOR PAVEMENT DESIGN.
3. VARIABLE DEPTH MILL AND OVERLAY MAY BE NECESSARY FOR SLOPE CORRECTION.
4. ALL EXISTING PAVED SHOULDERS AND EXISTING GORE AREAS SHALL BE CUT WITH A SMOOTH VERTICAL FACE TO EXPOSE THE ORIGINAL PORTLAND CEMENT CONCRETE PAVEMENT. DEMOLISHED AND RECONSTRUCTED WITH THE MAINLINE I-395 PAVEMENT SECTION SPECIFIED IN THE GEOTECHNICAL ENGINEERING DATA REPORT.
5. ALL UNDERDRAINS BENEATH THE EXISTING PAVED SHOULDERS SHALL BE REMOVED AND REPLACED TO THE NEAREST AVAILABLE OUTLET.

INDEX OF SHEETS

ROADWAY CONCEPTUAL PLANS

SHEET #	DESCRIPTION
1 TO 4	TYPICAL SECTIONS
5 TO 11	PLAN SHEETS
12 TO 16	PROFILES
17 TO 18	CONCEPTUAL SIGNING AND MARKING PLANS
19	CONCEPTUAL SIGNAL PLAN
20 TO 21	UTILITY CONFLICT MATRIX
22 TO 23	CONCEPTUAL LANDSCAPING PLAN

STRUCTURAL CONCEPTUAL PLANS

SHEET #	DESCRIPTION
S01 TO S03	SEMINARY ROAD BRIDGE
S04 TO S07	I-395 HOV RAMP BRIDGE
S08 TO S14	SANGER AVENUE BRIDGE
S15 TO S19	PEDESTRIAN BRIDGE
S20 TO S21	HOLMES RUN CULVERT

PARSONS

TYPICAL SECTIONS - 1

PROJECT	SHEET NO.
0395-100-722/736	01

1/2/2013
11:42:44 PM

PROJECT MANAGER Archer Western Construction LLC.
SURVEYED BY Archer Western Construction LLC.
DESIGN SUPERVISED BY Parsons Transportation Group
DESIGNED BY Parsons Transportation Group

THESE PLANS ARE UNFINISHED AND UNAPPROVED AND ARE NOT TO BE USED FOR ANY TYPE OF CONSTRUCTION OR THE ACQUISITION OF RIGHT OF WAY.

REVISED	STATE	STATE ROUTE	STATE PROJECT	SHEET NO.
	VA.	395	0395-100-722/ 736 C501	02

DESIGN FEATURES RELATING TO CONSTRUCTION OR TO REGULATION AND CONTROL OF TRAFFIC MAY BE SUBJECT TO CHANGE AS DEEMED NECESSARY BY THE DEPARTMENT

I-395 NB MAINLINE

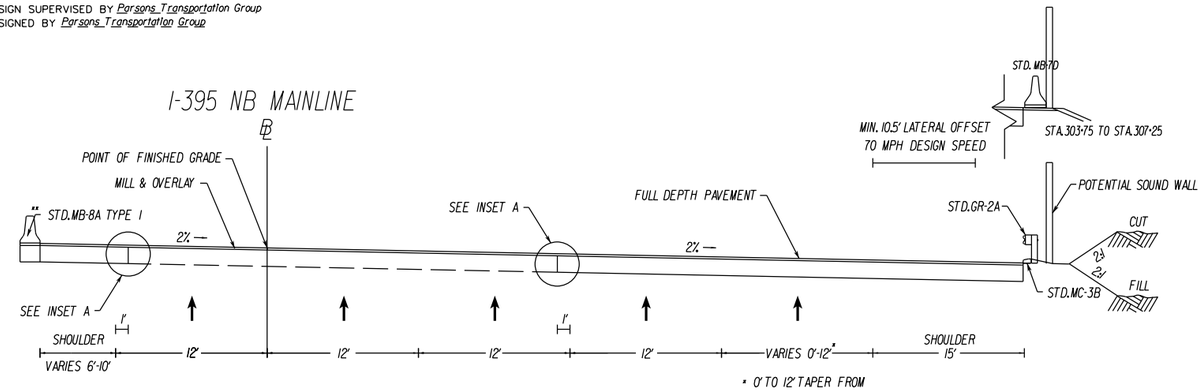

STA.303+75.00 TO STA.326+02.14

* 0' TO 12' TAPER FROM STA.319+50.00 TO STA.322+50.00
** ST'D MB-7E FROM STA.313+72.26 TO STA.322+50.98
ST'D MB-7F STA.325+39.63 TO STA.326+02.14

I-395 NB RAMP

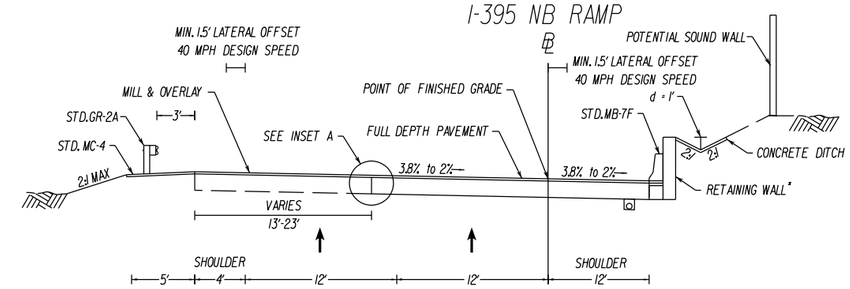

STA.408+00.00 TO STA.410+50.00

I-395 NB MAINLINE

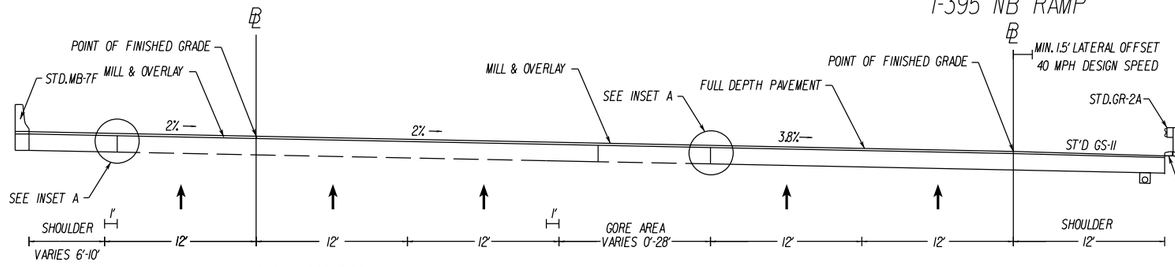

STA.326+02.14 TO STA.334+00.00

I-395 NB RAMP

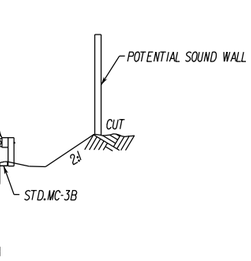

STA.400+00.00 TO STA.408+00.00

NOTES:

1. FOR LIMITS OF MILL AND OVERLAY AND FULL DEPTH PAVEMENT. REFER TO PLAN SHEETS.

2. REFER TO GEOTECHNICAL ENGINEERING DATA REPORT FOR PAVEMENT DESIGN.

3. VARIABLE DEPTH MILL AND VOERLAY MAY BE NECESSARY FOR SLOPE CORRECTION.

4. ALL EXISTING PAVED SHOULDERS AND EXISTING GORE AREAS SHALL BE CUT WITH A SMOOTH VERTICAL FACE TO EXPOSE THE ORIGINAL PORTLAND CEMENT CONRETE PAVEMENT, DEMOLISHED AND RECONSTRUCTED WITH THE MAINLINE I-395 PAVEMENT SECTION SPECIFIED IN THE GEOTEHCNICAL ENGINEERING DATA REPORT.

5. ALL UNDERDRAINS BENEATH THE EXISTING PAVED SHOULDERS SHALL BE REMOVED AND REPLACED TO THE NEAREST AVAILABLE OUTLET.

I-395 NB MAINLINE

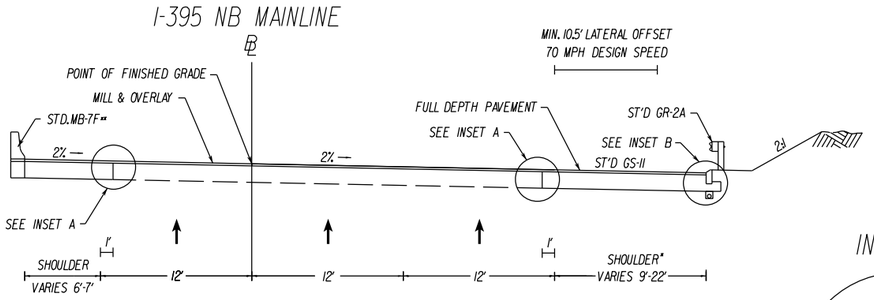

STA.334+00.00 TO STA.341+94.00

* 12' SHOULDER FROM STA.338+18.52 TO 341+12.49
** ST'D MB-7F STA.324+95.40 TO STA.339+92.41

I-395 NB RAMP

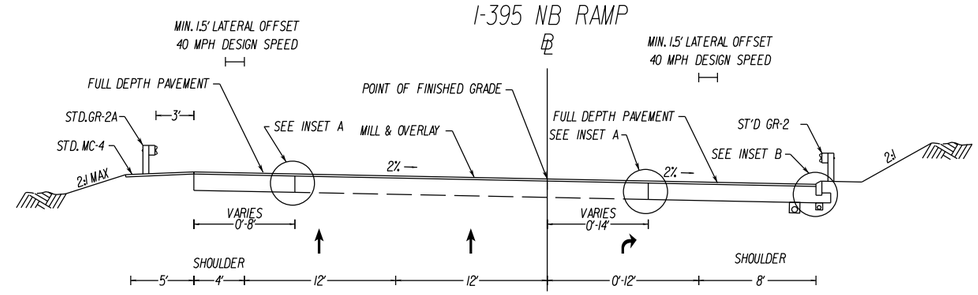

STA.410+50.00 TO 416+06.64

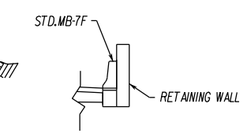

STA.414+25.00 TO 416+06.64

INSET A

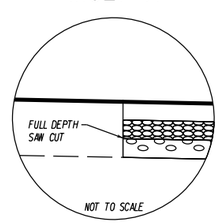

INSET B

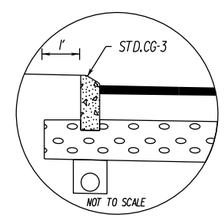

PARSONS

TYPICAL SECTIONS - 2

PROJECT	SHEET NO.
0395-100-722/736	02

1/2/2013
11:43:02 PM

PROJECT MANAGER Archer Western Construction LLC.
SURVEYED BY Archer Western Construction LLC.
DESIGN SUPERVISED BY Parsons Transportation Group
DESIGNED BY Parsons Transportation Group

THESE PLANS ARE UNFINISHED AND UNAPPROVED AND ARE NOT TO BE USED FOR ANY TYPE OF CONSTRUCTION OR THE ACQUISITION OF RIGHT OF WAY.

REVISED	STATE	STATE ROUTE	STATE PROJECT	SHEET NO.
	VA.	395	0395-100-722/ 736 C501	03

DESIGN FEATURES RELATING TO CONSTRUCTION OR TO REGULATION AND CONTROL OF TRAFFIC MAY BE SUBJECT TO CHANGE AS DEEMED NECESSARY BY THE DEPARTMENT

I-395 HOV

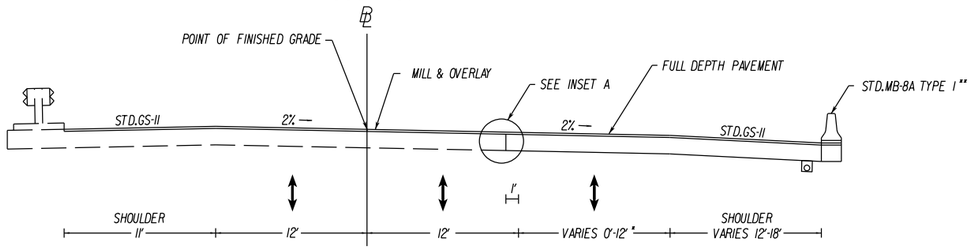

STA.203+75.00 TO STA.218+48.13

* 0' TO 12' TAPER FROM STA.210+34.80 TO STA.213+34.80
** ST'D MB-7E FROM STA.213+76.73 TO 218+48.13

I-395 HOV / I-395 HOV RAMP

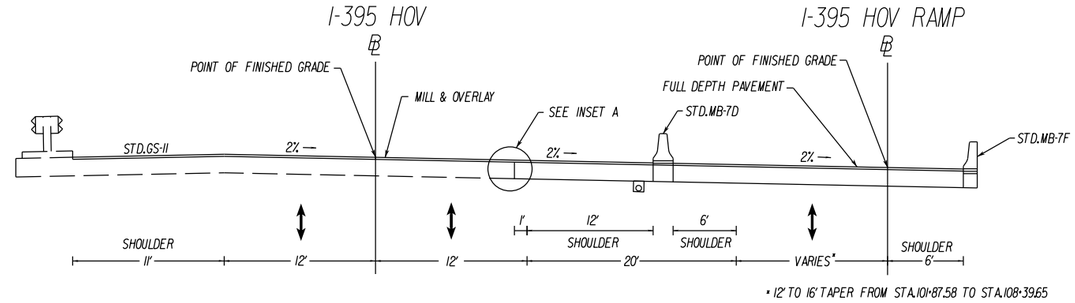

* 12' TO 16' TAPER FROM STA.101+87.58 TO STA.108+39.65

STA.225+49.20 TO STA.226+89.89

STA.107+00.00 TO STA.108+39.65

I-395 HOV / I-395 HOV RAMP

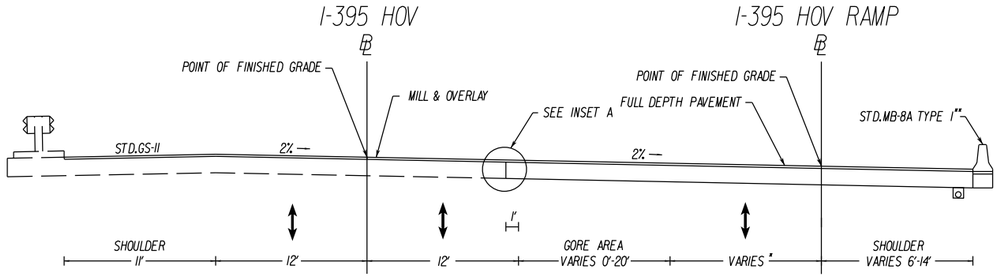

STA.218+48.13 TO STA.225+49.20

STA.100+00.00 TO STA.107+00.00

* 12' FROM STA.100+00.00 TO STA.101+87.58
12' TO 16' TAPER FROM STA.101+87.58 TO STA.108+39.65
** STD.MB-7E FROM STA.100+00.00 TO STA.104+11.20

I-395 HOV / I-395 HOV RAMP

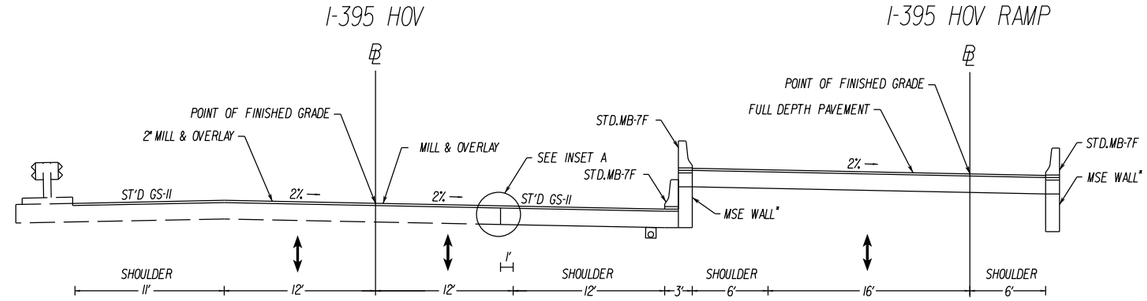

STA.226+89.89 TO STA.233+12.73

STA.108+39.65 TO STA.114+60.60

* HEIGHT RANGES FROM 2' TO 17'

INSET A

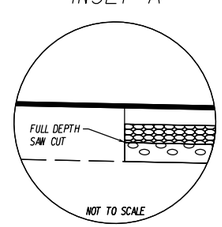

I-395 HOV

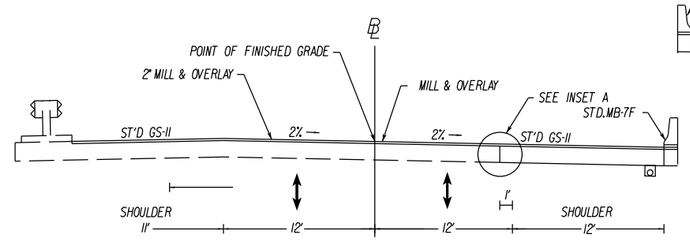

STA.233+12.73 TO STA.241+89.77

I-395 HOV RAMP

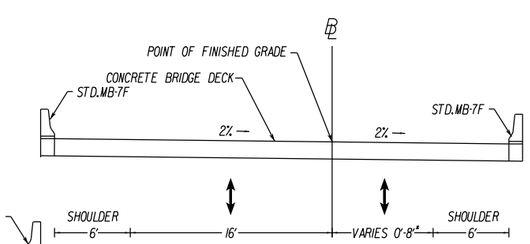

STA.114+60.60 TO STA.125+43.11

* 0' TO 8' TAPER FROM STA.115+64.41 TO STA.118+64.41

PARSONS

TYPICAL SECTIONS - 3

PROJECT	SHEET NO.
0395-100-722/736	03

1/2/2013
11:43:21 PM

PROJECT MANAGER Archer Western Construction LLC.
SURVEYED BY Archer Western Construction LLC.
DESIGN SUPERVISED BY Parsons Transportation Group
DESIGNED BY Parsons Transportation Group

THESE PLANS ARE UNFINISHED AND UNAPPROVED AND ARE NOT TO BE USED FOR ANY TYPE OF CONSTRUCTION OR THE ACQUISITION OF RIGHT OF WAY.

REVISED	STATE	STATE ROUTE	STATE PROJECT	SHEET NO.
	VA.	395	0395-100-722/ 736 C501	04

DESIGN FEATURES RELATING TO CONSTRUCTION OR TO REGULATION AND CONTROL OF TRAFFIC MAY BE SUBJECT TO CHANGE AS DEEMED NECESSARY BY THE DEPARTMENT

SEMINARY ROAD

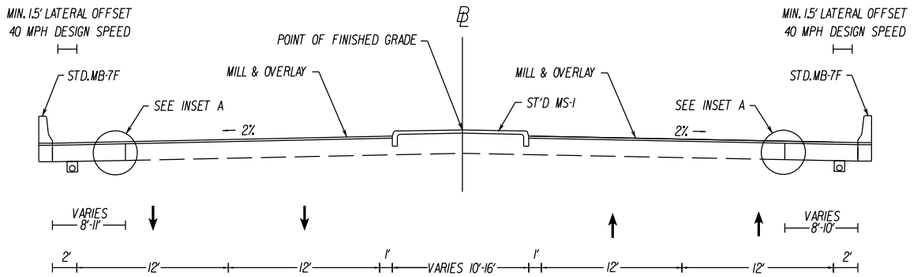

STA. 506+52.49 TO STA. 510+44.47

SEMINARY ROAD

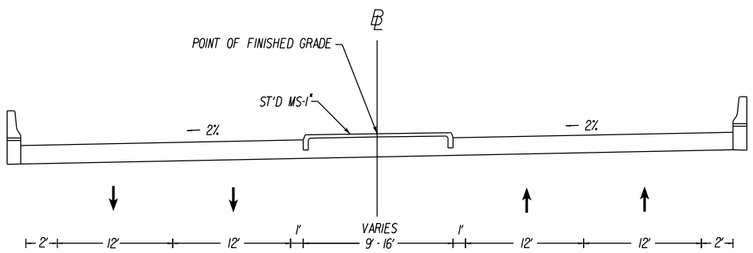

* HOV RAMP ENTRANCE FROM STA. 512+00.64 TO STA. 512+98.35

STA. 510+44.47 TO STA. 515+63.53

SEMINARY ROAD

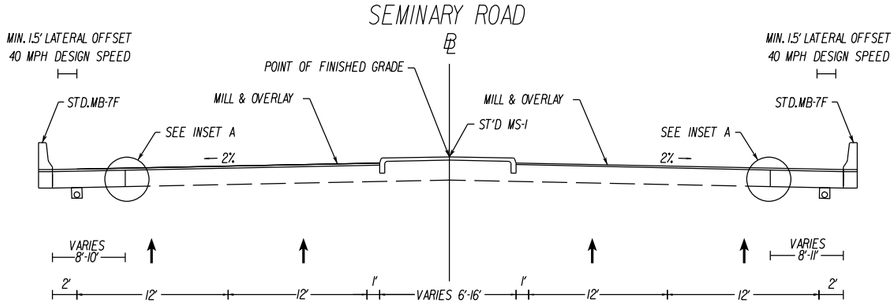

STA. 515+63.51 TO STA. 519+29.72

NOTE: SEE STRUCTURE PLANS FOR BRIDGE TYPICALS

INSET A

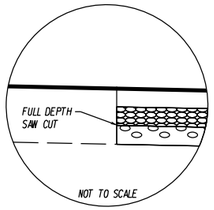

PARSONS

TYPICAL SECTIONS - 4

PROJECT	SHEET NO.
0395-100-722/736	04

1/2/2013
11:43:49 PM

PROJECT MANAGER Archer Western Construction LLC.
SURVEYED BY Archer Western Construction LLC.
DESIGN SUPERVISED BY Parsons Transportation Group
DESIGNED BY Parsons Transportation Group

- Denotes Proposed Pavement
- Denotes Pavement Milling and Resurfacing
- Denotes Median
- Denotes Bridge

THESE PLANS ARE UNFINISHED AND UNAPPROVED AND ARE NOT TO BE USED FOR ANY TYPE OF CONSTRUCTION OR THE ACQUISITION OF RIGHT OF WAY.

REVISED	STATE	STATE ROUTE	STATE PROJECT	SHEET NO.
	VA.	395	0395-100-722/ 736 C501	05

DESIGN FEATURES RELATING TO CONSTRUCTION OR TO REGULATION AND CONTROL OF TRAFFIC MAY BE SUBJECT TO CHANGE AS DEEMED NECESSARY BY THE DEPARTMENT

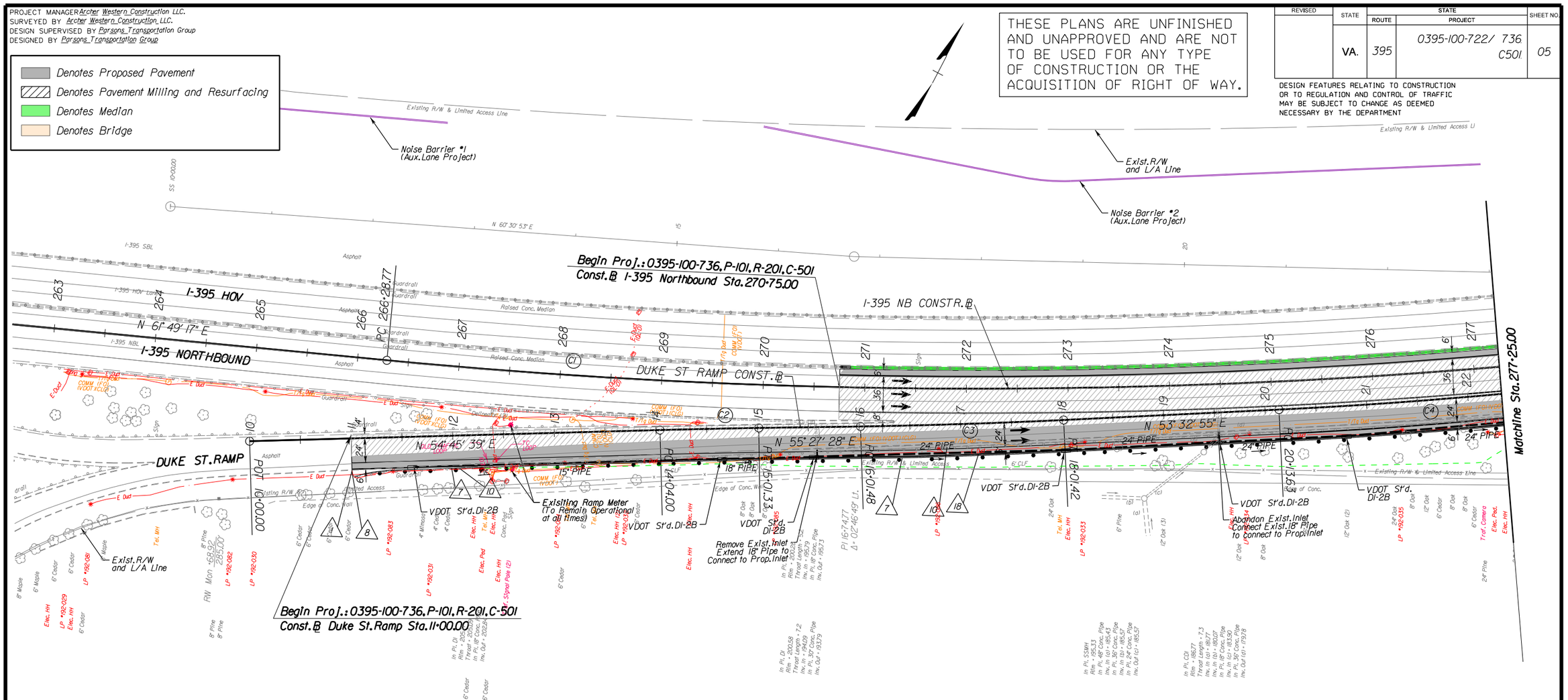

Notes:

1. See Sheets 17 and 18 for Conceptual Signing and Marking Plans.
2. See Sheets 22 and 23 for Conceptual Landscaping Plans.
3. Only Design of Noise Barrier #1 and Noise Barrier #2 on Aux.Lane Project are included in this proposal.

1. ST'D CG-3 REQ'D
2. ST'D GR-11 REQ'D
3. RETAINING WALL
4. MSE WALL
5. ST'D MB-7F REQ'D
6. POTENTIAL NOISE WALL
7. ST'D GR-2 REQ'D
8. ST'D GR-9 REQ'D
9. ST'D GR-FOA-2 TYPE 1
10. REMOVE EXISTING GUARDRAIL
11. ST'D GR-FOA-2 TYPE 2
12. ST'D MB-7D REQ'D
13. ST'D MS-1 REQ'D
14. PROP. PEDESTRIAN BRIDGE
15. ST'D MB-8A TYPE 1
16. HOV DIRECTIONAL GATE
17. REMOVE EXISTING MEDIAN
18. ST'D CG-2 REQ'D
19. ST'D MB-7E REQ'D
20. PROP. IMPACT ATTENUATOR SERVICE TYPE 1, TL-3
21. PROPOSED SIDEWALK
22. ST'D MC-3B REQ'D
23. REMOVE EX. CONCRETE DITCH
24. ST'D GR-2A REQ'D
25. 54" PIER PROTECTION BARRIER

C1 Curve NB-00
PI = 27+44.08
DELTA = 17° 07' 40.72" (LT)
D = 0° 56' 34"
T = 915.30'
L = 1,816.95'
R = 6,078.00'
PC = 266+28.77
PT = 284+45.73

C2 Curve DNB01
PI = 14+52.67
DELTA = 0° 41' 49.42" (RT)
D = 0° 42' 58"
T = 48.66'
L = 97.33'
R = 8,000.00'
PC = 14+04.00
PT = 15+01.33

C3 Curve DNB02
PI = 17+01.46
DELTA = 1° 54' 33.61" (LT)
D = 0° 57' 18"
T = 99.98'
L = 199.95'
R = 6,000.00'
PC = 16+01.48
PT = 18+01.42

C4 Curve DNB03
PI = 22+40.86
DELTA = 5° 12' 15.59" (LT)
D = 1° 08' 45"
T = 227.24'
L = 454.16'
R = 5,000.00'
PC = 20+13.62
PT = 24+67.79

SCALE
0 100' 200'

PARSONS

PLAN SHEET - 1

PROJECT	SHEET NO.
0395-100-722/736	05

1/2/2013
11:44:12 PM

PROJECT MANAGER Archer Western Construction LLC.
SURVEYED BY Archer Western Construction LLC.
DESIGN SUPERVISED BY Parsons Transportation Group
DESIGNED BY Parsons Transportation Group

- Denotes Proposed Pavement
- Denotes Pavement Milling and Resurfacing
- Denotes Median
- Denotes Bridge

THESE PLANS ARE UNFINISHED AND UNAPPROVED AND ARE NOT TO BE USED FOR ANY TYPE OF CONSTRUCTION OR THE ACQUISITION OF RIGHT OF WAY.

REVISED	STATE	STATE ROUTE	STATE PROJECT	SHEET NO.
	VA.	395	0395-100-722/ 736 C501	06

DESIGN FEATURES RELATING TO CONSTRUCTION OR TO REGULATION AND CONTROL OF TRAFFIC MAY BE SUBJECT TO CHANGE AS DEEMED NECESSARY BY THE DEPARTMENT

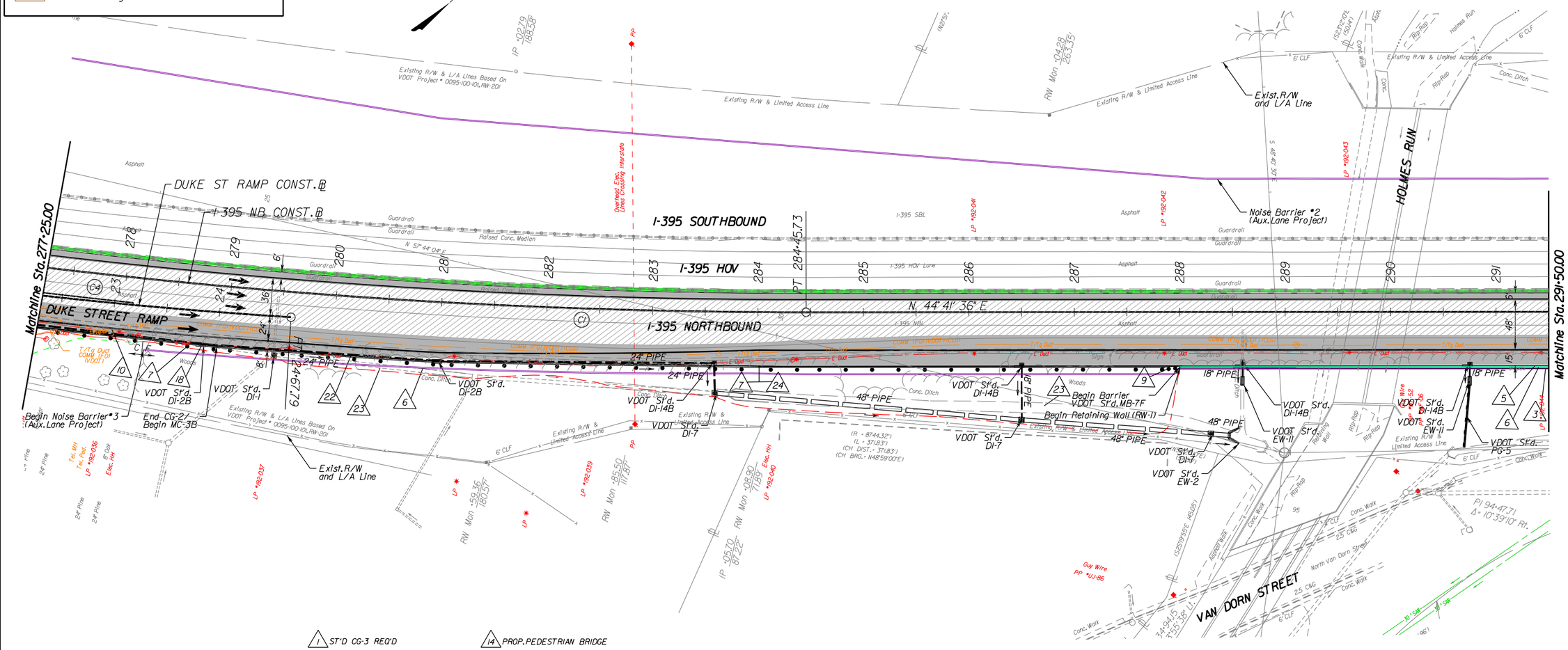

1. ST'D CG-3 REQ'D
2. ST'D GR-11 REQ'D
3. RETAINING WALL
4. MSE WALL
5. ST'D MB-7F REQ'D
6. POTENTIAL NOISE WALL
7. ST'D GR-2 REQ'D
8. ST'D GR-9 REQ'D
9. ST'D GR-FOA-2 TYPE 1
10. REMOVE EXISTING GUARDRAIL
11. ST'D GR-FOA-2 TYPE 2
12. ST'D MB-7D REQ'D
13. ST'D MS-1 REQ'D
14. PROP. PEDESTRIAN BRIDGE
15. ST'D MB-8A TYPE 1
16. HOV DIRECTIONAL GATE
17. REMOVE EXISTING MEDIAN
18. ST'D CG-2 REQ'D
19. ST'D MB-7E REQ'D
20. PROP. IMPACT ATTENUATOR SERVICE TYPE 1, TL-3
21. PROPOSED SIDEWALK
22. ST'D MC-3B REQ'D
23. REMOVE EX. CONCRETE DITCH
24. ST'D GR-2A REQ'D

(C1) Curve NB-00
PI = 275+44.08
DELTA = 17° 07' 40.72" (LT)
D = 0° 56' 34"
T = 915.30'
L = 1,816.95'
R = 6,078.00'
PC = 266+28.77
PT = 284+45.73

(C4) Curve DNB03
PI = 22+40.86
DELTA = 5° 12' 15.59" (LT)
D = 1° 08' 45"
T = 227.24'
L = 454.16'
R = 5,000.00'
PC = 20+13.62
PT = 24+67.79

Notes:

1. See Sheets 17 and 18 for Conceptual Signing and Marking Plans.
2. See Sheets 22 and 23 for Conceptual Landscaping Plans.
3. Only Design of Noise Barrier #1 and Noise Barrier #2 on Aux. Lane Project are included in this proposal.

SCALE
0 100' 200'

PARSONS

PLAN SHEET - 2

PROJECT	SHEET NO.
0395-100-722/736	06

1/2/2013
11:44:37 PM

PROJECT MANAGER Archer Western Construction LLC.
SURVEYED BY Archer Western Construction LLC.
DESIGN SUPERVISED BY Parsons Transportation Group
DESIGNED BY Parsons Transportation Group

- Denotes Proposed Pavement
- Denotes Pavement Milling and Resurfacing
- Denotes Median
- Denotes Bridge

THESE PLANS ARE UNFINISHED AND UNAPPROVED AND ARE NOT TO BE USED FOR ANY TYPE OF CONSTRUCTION OR THE ACQUISITION OF RIGHT OF WAY.

REVISED	STATE	STATE ROUTE	STATE PROJECT	SHEET NO.
	VA.	395	0395-100-722/ 736 C501	07

DESIGN FEATURES RELATING TO CONSTRUCTION OR TO REGULATION AND CONTROL OF TRAFFIC MAY BE SUBJECT TO CHANGE AS DEEMED NECESSARY BY THE DEPARTMENT

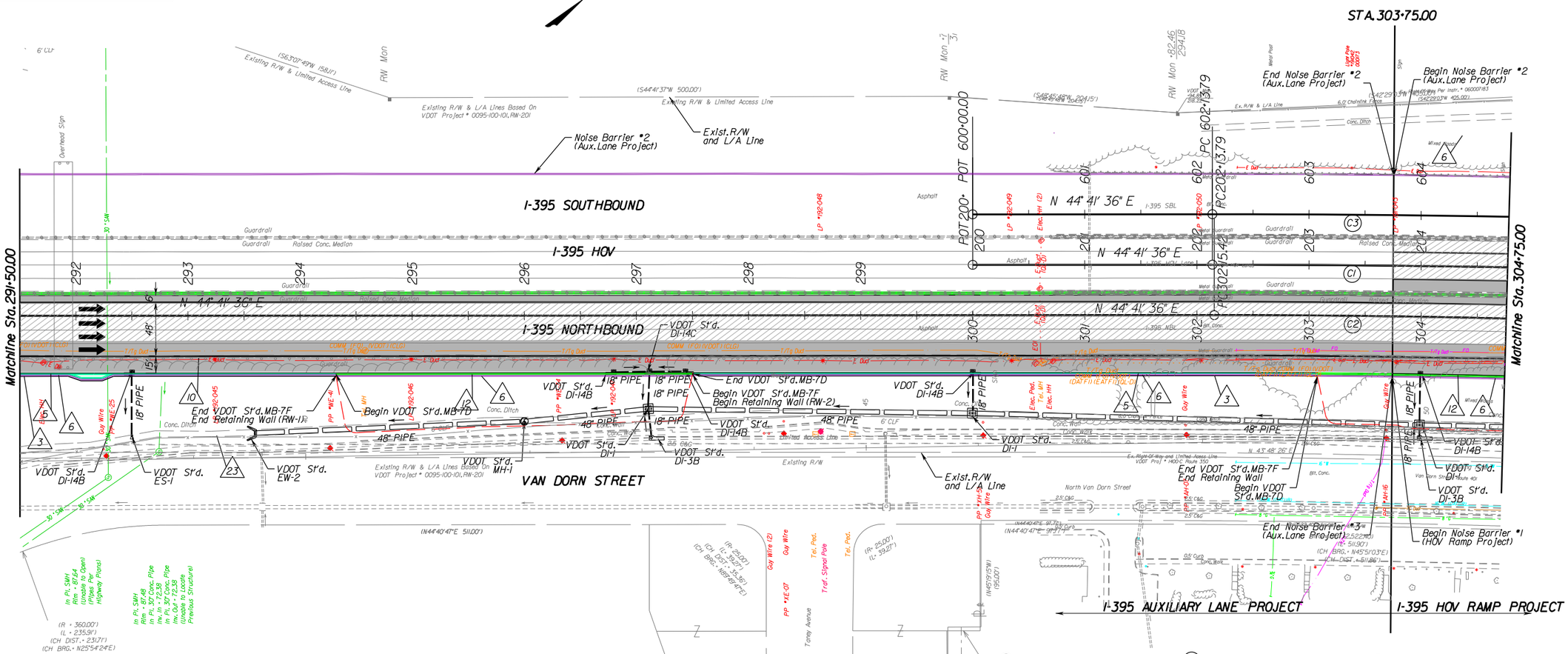

Notes:

1. See Sheets 17 and 18 for Conceptual Signing and Marking Plans.
2. See Sheets 22 and 23 for Conceptual Landscaping Plans.
3. Only Design of Noise Barrier #1 and Noise Barrier #2 on Aux.Lane Project are included in this proposal.

Notes:

1. ST'D CG-3 REQ'D
2. ST'D GR-11 REQ'D
3. RETAINING WALL
4. MSE WALL
5. ST'D MB-7F REQ'D
6. POTENTIAL NOISE WALL
7. ST'D GR-2 REQ'D
8. ST'D GR-9 REQ'D
9. ST'D GR-FOA-2 TYPE 1
10. REMOVE EXISTING GUARDRAIL
11. ST'D GR-FOA-2 TYPE 2
12. ST'D MB-7D REQ'D
13. ST'D MS-1 REQ'D
14. PROP. PEDESTRIAN BRIDGE
15. ST'D MB-8A TYPE 1
16. HOV DIRECTIONAL GATE
17. REMOVE EXISTING MEDIAN
18. ST'D CG-2 REQ'D
19. ST'D MB-7E REQ'D
20. PROP. IMPACT ATTENUATOR SERVICE TYPE 1, TL-3
21. PROPOSED SIDEWALK
22. ST'D MC-3B REQ'D
23. REMOVE EX. CONCRETE DITCH
24. ST'D GR-2A REQ'D

(C1) Curve HOV-1
PI = 222+78.30
DELTA = 16° 46' 38.43" (RT)
D = 0° 24' 33"
T = 2,064.51'
L = 4,099.48'
R = 14,000.00'
PC = 202+13.79
PT = 243+13.26

(C2) Curve NB-1
PI = 307+91.60
DELTA = 6° 07' 35.02" (RT)
D = 0° 31' 56"
T = 576.18'
L = 1,151.27'
R = 10,767.00'
PC = 302+15.42
PCC = 313+66.69

(C3) Curve SB-1
PI = 622+84.94
DELTA = 16° 46' 38.45" (RT)
D = 0° 24' 29"
T = 2,071.15'
L = 4,112.66'
R = 14,045.00'
PC = 602+13.79
PT = 643+26.44
V = 70 MPH

SCALE
0 100' 200'

PARSONS

PLAN SHEET - 3

PROJECT	SHEET NO.
0395-100-722/736	07

1/2/2013
11:44:58 PM

PROJECT MANAGER Archer Western Construction LLC.
SURVEYED BY Archer Western Construction LLC.
DESIGN SUPERVISED BY Parsons Transportation Group
DESIGNED BY Parsons Transportation Group

- Denotes Proposed Pavement
- Denotes Pavement Milling and Resurfacing
- Denotes Median
- Denotes Bridge

THESE PLANS ARE UNFINISHED AND UNAPPROVED AND ARE NOT TO BE USED FOR ANY TYPE OF CONSTRUCTION OR THE ACQUISITION OF RIGHT OF WAY.

REVISED	STATE	STATE ROUTE	STATE PROJECT	SHEET NO.
	VA.	395	0395-100-722/ 736 C501	08

DESIGN FEATURES RELATING TO CONSTRUCTION OR TO REGULATION AND CONTROL OF TRAFFIC MAY BE SUBJECT TO CHANGE AS DEEMED NECESSARY BY THE DEPARTMENT

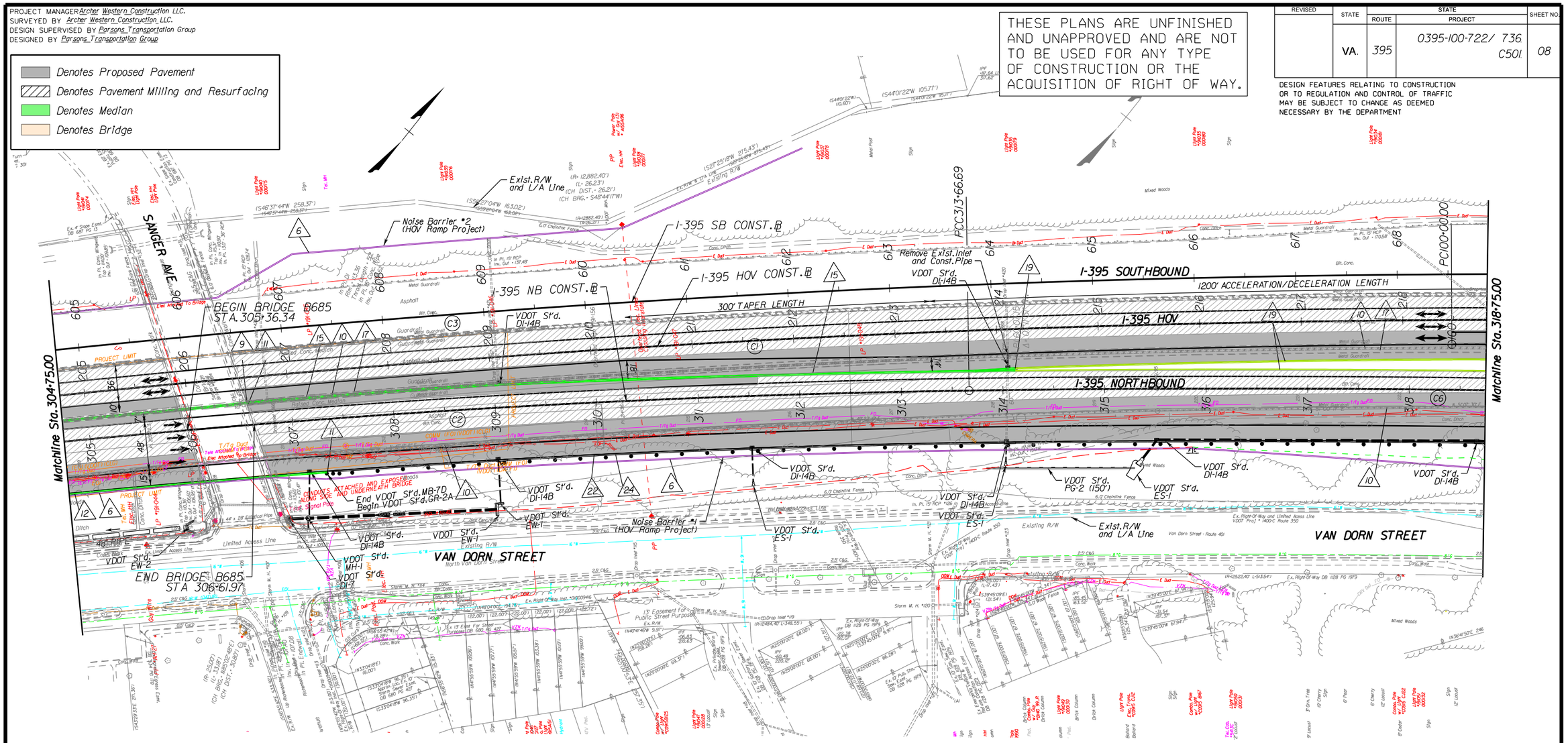

1. ST'D CG-3 REQ'D
2. ST'D GR-11 REQ'D
3. RETAINING WALL
4. MSE WALL
5. ST'D MB-7F REQ'D
6. POTENTIAL NOISE WALL
7. ST'D GR-2 REQ'D
8. ST'D GR-9 REQ'D
9. ST'D GR-FOA-2 TYPE 1
10. REMOVE EXISTING GUARDRAIL
11. ST'D GR-FOA-2 TYPE 2
12. ST'D MB-7D REQ'D
13. ST'D MS-1 REQ'D
14. PROP. PEDESTRIAN BRIDGE
15. ST'D MB-8A TYPE 1
16. HOV DIRECTIONAL GATE
17. REMOVE EXISTING MEDIAN
18. ST'D CG-2 REQ'D
19. ST'D MB-7E REQ'D
20. PROP. IMPACT ATTENUATOR SERVICE TYPE 1, TL-3
21. PROPOSED SIDEWALK
22. ST'D MC-3B REQ'D
23. REMOVE EX. CONCRETE DITCH
24. ST'D GR-2A REQ'D

C1 Curve HOV-1
PI = 222+78.30
DELTA = 16° 46' 38.43" (RT)
D = 0° 24' 33"
T = 2,064.51'
L = 4,099.48'
R = 14,000.00'
PC = 202+13.79
PT = 243+13.26

C2 Curve NB-1
PI = 307+91.60
DELTA = 6° 07' 35.02" (RT)
D = 0° 31' 56"
T = 576.18'
L = 1,151.27'
R = 10,767.00'
PC = 302+15.42
PCC = 313+66.69

C6 Curve NB-2
PI = 324+39.12
DELTA = 6° 49' 09.25" (RT)
D = 0° 19' 06"
T = 1,072.43'
L = 2,142.33'
R = 18,000.00'
PCC = 313+66.69
PCC = 335+09.01

Notes:

1. See Sheets 17 and 18 for Conceptual Signing and Marking Plans.
2. See Sheets 22 and 23 for Conceptual Landscaping Plans.
3. Only Design of Noise Barrier #1 and Noise Barrier #2 on Aux. Lane Project are included in this proposal.

SCALE
0 100' 200'

PARSONS

PLAN SHEET - 4

PROJECT	SHEET NO.
0395-100-722/736	08

1/2/2013
11:45:18 PM

PROJECT MANAGER Archer Western Construction LLC.
SURVEYED BY Archer Western Construction LLC.
DESIGN SUPERVISED BY Parsons Transportation Group
DESIGNED BY Parsons Transportation Group

- Denotes Proposed Pavement
- Denotes Pavement Milling and Resurfacing
- Denotes Median
- Denotes Bridge

THESE PLANS ARE UNFINISHED AND UNAPPROVED AND ARE NOT TO BE USED FOR ANY TYPE OF CONSTRUCTION OR THE ACQUISITION OF RIGHT OF WAY.

REVISED	STATE	ROUTE	PROJECT	SHEET NO.
	VA.	395	0395-100-722/ 736 C501	09

DESIGN FEATURES RELATING TO CONSTRUCTION OR TO REGULATION AND CONTROL OF TRAFFIC MAY BE SUBJECT TO CHANGE AS DEEMED NECESSARY BY THE DEPARTMENT

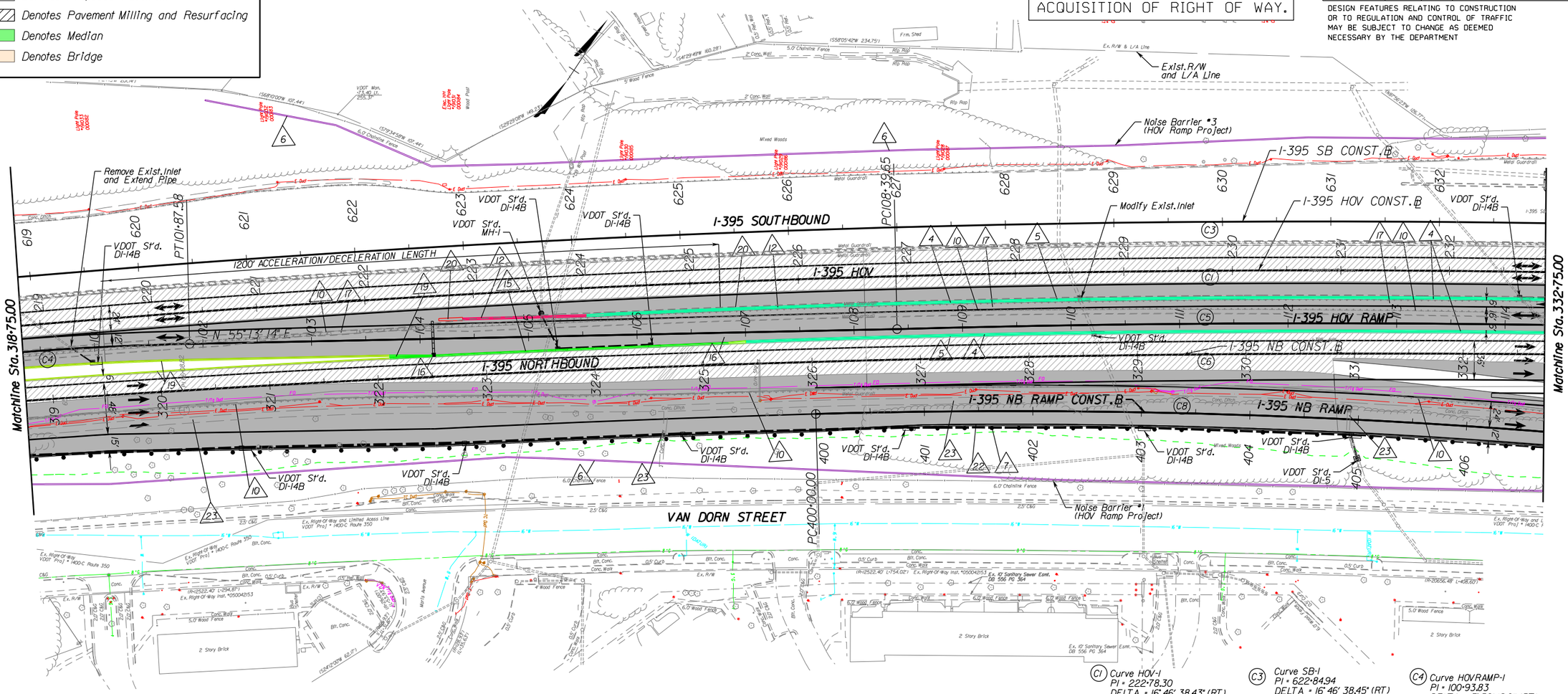

(C1) Curve HOV-1
PI = 222+78.30
DELTA = 16° 46' 38.43" (RT)
D = 0° 24' 33"
T = 2,064.51'
L = 4,099.48'
R = 14,000.00'
PC = 202+13.79
PT = 243+13.26

(C3) Curve SB-1
PI = 622+84.94
DELTA = 16° 46' 38.45" (RT)
D = 0° 24' 29"
T = 2,071.15'
L = 4,112.66'
R = 14,045.00'
PC = 602+13.79
PT = 643+26.44

(C4) Curve HOVRAMP-1
PI = 100+93.83
DELTA = 3° 50' 18.61" (RT)
D = 2° 02' 47"
T = 93.83'
L = 187.58'
R = 2,800.00'
PC = 100+00.00
PT = 101+87.58

(C5) Curve HOVRAMP-2
PI = 116+05.65
DELTA = 6° 17' 07.43" (RT)
D = 0° 24' 38"
T = 766.00'
L = 1,530.47'
R = 13,951.26'
PC = 108+39.65
PT = 123+70.11
LS = See Profile Sheet
V = 40 MPH
E = 2.00%

(C6) Curve NB-2
PI = 324+39.12
DELTA = 6° 49' 09.25" (RT)
D = 0° 19' 06"
T = 1,072.43'
L = 2,142.33'
R = 18,000.00'
PCC = 313+66.69
PCC = 335+09.01

(C8) Curve NBRAMP-1
PI = 404+08.65
DELTA = 7° 26' 34.56" (RT)
D = 0° 54' 43"
T = 408.65'
L = 816.15'
R = 6,282.72'
PC = 400+00.00
PT = 408+16.15

Notes:

1. See Sheets 17 and 18 for Conceptual Signing and Marking Plans.
2. See Sheets 22 and 23 for Conceptual Landscaping Plans.
3. Only Design of Noise Barrier #1 and Noise Barrier #2 on Aux.Lane Project are included in this proposal.

1. ST'D CG-3 REQ'D
2. ST'D GR-11 REQ'D
3. RETAINING WALL
4. MSE WALL
5. ST'D MB-7F REQ'D
6. POTENTIAL NOISE WALL
7. ST'D GR-2 REQ'D
8. ST'D GR-9 REQ'D
9. ST'D GR-F0A-2 TYPE 1
10. REMOVE EXISTING GUARDRAIL
11. ST'D GR-F0A-2 TYPE 2
12. ST'D MB-7D REQ'D
13. ST'D MS-1 REQ'D
14. PROP.PEDESTRIAN BRIDGE
15. ST'D MB-8A TYPE 1
16. HOV DIRECTIONAL GATE
17. REMOVE EXISTING MEDIAN
18. ST'D CG-2 REQ'D
19. ST'D MB-7E REQ'D
20. PROP.IMPACT ATTENUATOR SERVICE TYPE 1,TL-3
21. PROPOSED SIDEWALK
22. ST'D MC-3B REQ'D
23. REMOVE EX.CONCRETE DITCH
24. ST'D GR-2A REQ'D

SCALE
0 100' 200'

PARSONS

PLAN SHEET - 5

PROJECT	SHEET NO.
0395-100-722/736	09

1/3/2013
1:10:54 AM

PROJECT MANAGER Archer Western Construction LLC.
SURVEYED BY Archer Western Construction LLC.
DESIGN SUPERVISED BY Parsons Transportation Group
DESIGNED BY Parsons Transportation Group

- Denotes Proposed Pavement
- Denotes Pavement Milling and Resurfacing
- Denotes Median
- Denotes Bridge

THESE PLANS ARE UNFINISHED AND UNAPPROVED AND ARE NOT TO BE USED FOR ANY TYPE OF CONSTRUCTION OR THE ACQUISITION OF RIGHT OF WAY.

REVISED	STATE	STATE ROUTE	STATE PROJECT	SHEET NO.
	VA.	395	0395-100-722/ 736 C501	10

DESIGN FEATURES RELATING TO CONSTRUCTION OR TO REGULATION AND CONTROL OF TRAFFIC MAY BE SUBJECT TO CHANGE AS DEEMED NECESSARY BY THE DEPARTMENT

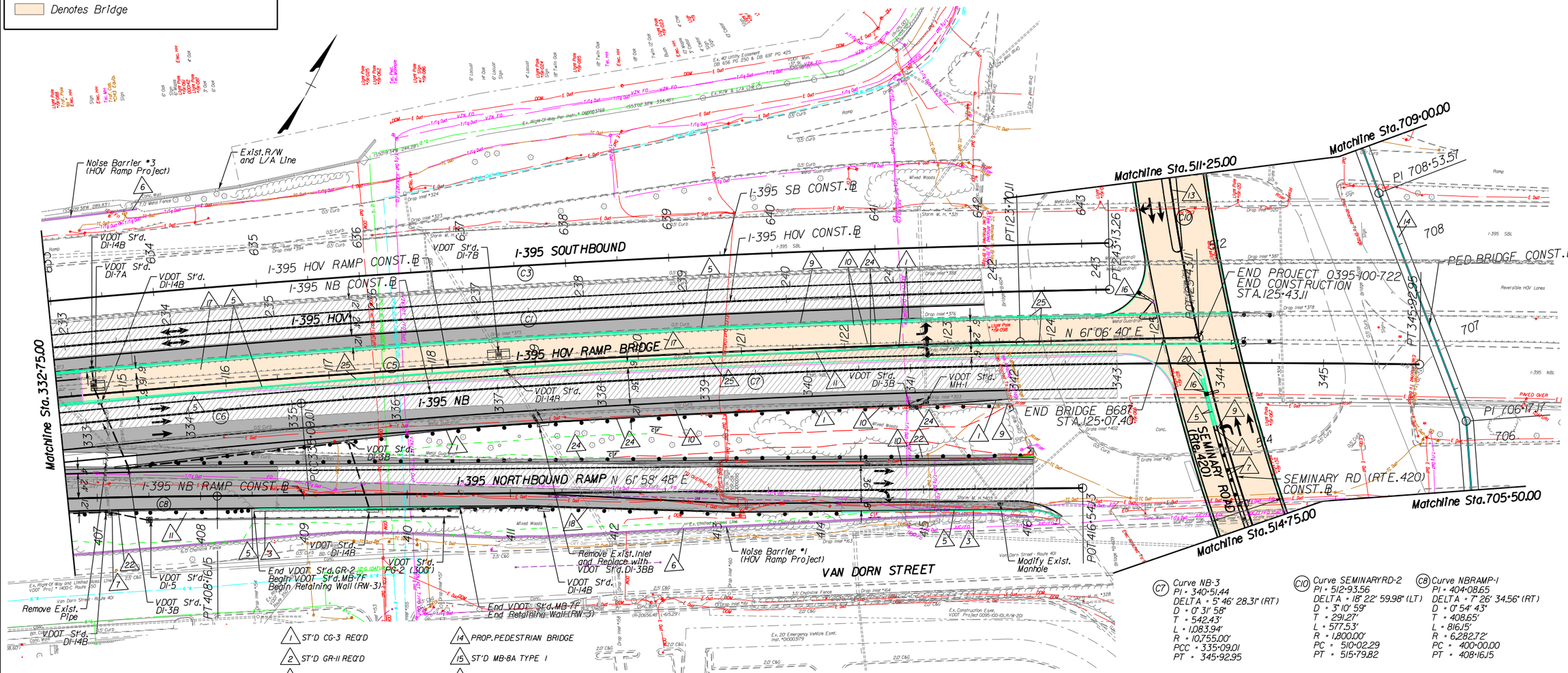

1	ST'D CG-3 REQ'D
2	ST'D GR-11 REQ'D
3	RETAINING WALL
4	MSE WALL
5	ST'D MB-7F REQ'D
6	POTENTIAL NOISE WALL
7	ST'D GR-2 REQ'D
8	ST'D GR-9 REQ'D
9	ST'D GR-FOA-2 TYPE 1
10	REMOVE EXISTING GUARDRAIL
11	ST'D GR-FOA-2 TYPE 2
12	ST'D MB-7D REQ'D
13	ST'D MS-1 REQ'D
14	PROP.PEDESTRIAN BRIDGE
15	ST'D MB-8A TYPE 1
16	HOV DIRECTIONAL GATE
17	REMOVE EXISTING MEDIAN
18	ST'D CG-2 REQ'D
19	ST'D MB-7E REQ'D
20	PROP.IMPACT ATTENUATOR SERVICE TYPE 1,TL-3
21	PROPOSED SIDEWALK
22	ST'D MC-3B REQ'D
23	REMOVE EX.CONCRETE DITCH
24	ST'D GR-2A REQ'D
25	54" PIER PROTECTION BARRIER

Notes:

1. See Sheets 17 and 18 for Conceptual Signing and Marking Plans.
2. See Sheets 22 and 23 for Conceptual Landscaping Plans.
3. Only Design of Noise Barrier #1 and Noise Barrier #2 on Aux.Lane Project are included in this proposal.

(C3) Curve SB-1
PI = 622+84.94
DELTA = 16° 46' 38.45" (RT)
D = 0° 24' 29"
T = 2,071.15'
L = 4,112.66'
R = 14,045.00'
PC = 602+13.79
PT = 643+26.44

(C1) Curve HOV-1
PI = 222+78.30
DELTA = 16° 46' 38.43" (RT)
D = 0° 24' 33"
T = 2,064.51'
L = 4,099.48'
R = 14,000.00'
PC = 202+13.79
PT = 243+13.26

(C5) Curve HOVRAMP-2
PI = 116+05.65
DELTA = 6° 17' 07.43" (RT)
D = 0° 24' 38"
T = 766.00'
L = 1,530.47'
R = 13,951.26'
PC = 108+39.65
PT = 123+70.11
LS = See Profile Sheet
V = 40 MPH
E = 2.00%

(C6) Curve NB-2
PI = 324+39.12
DELTA = 6° 49' 09.25" (RT)
D = 0° 19' 06"
T = 1,072.43'
L = 2,142.33'
R = 18,000.00'
PCC = 313+66.69
PCC = 335+09.01

(C7) Curve NB-3
PI = 340+51.44
DELTA = 5° 46' 28.31" (RT)
D = 0° 31' 58"
T = 542.43'
L = 1,083.94'
R = 10,755.00'
PCC = 335+09.01
PT = 345+92.95

(C10) Curve SEMINARY RD-2
PI = 512+93.56
DELTA = 18° 22' 59.98" (LT)
D = 3° 10' 59"
T = 291.27'
L = 577.53'
R = 1,800.00'
PC = 510+02.29
PT = 515+79.82

(C8) Curve NBRAMP-1
PI = 404+08.65
DELTA = 7° 26' 34.56" (RT)
D = 0° 54' 43"
T = 408.65'
L = 816.15'
R = 6,282.72'
PC = 400+00.00
PT = 408+16.15

SCALE
0 100' 200'

PARSONS

PLAN SHEET - 6

PROJECT	SHEET NO.
0395-100-722/736	10

1/2/2013
11:46:01 PM

PROJECT MANAGER Archer Western Construction LLC.
SURVEYED BY Archer Western Construction LLC.
DESIGN SUPERVISED BY Parsons Transportation Group
DESIGNED BY Parsons Transportation Group

- Denotes Proposed Pavement
- Denotes Pavement Milling and Resurfacing
- Denotes Median
- Denotes Bridge

THESE PLANS ARE UNFINISHED AND UNAPPROVED AND ARE NOT TO BE USED FOR ANY TYPE OF CONSTRUCTION OR THE ACQUISITION OF RIGHT OF WAY.

REVISED	STATE	STATE ROUTE	STATE PROJECT	SHEET NO.
	VA.	395	0395-100-722/ 736 C501	11

DESIGN FEATURES RELATING TO CONSTRUCTION OR TO REGULATION AND CONTROL OF TRAFFIC MAY BE SUBJECT TO CHANGE AS DEEMED NECESSARY BY THE DEPARTMENT

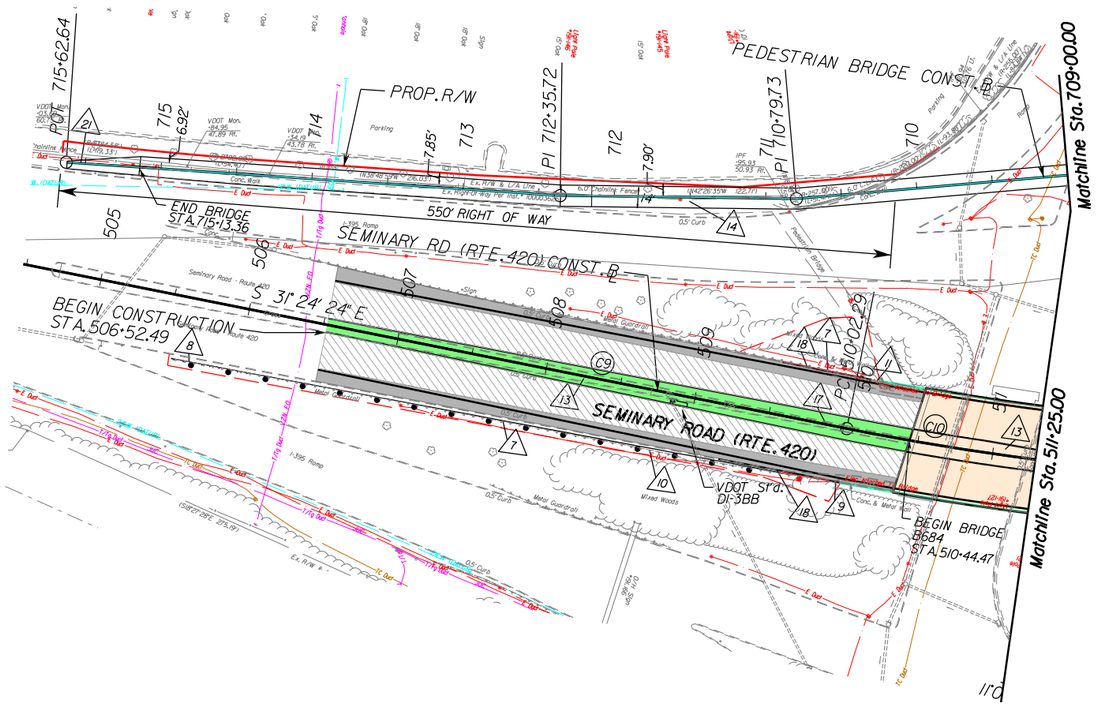

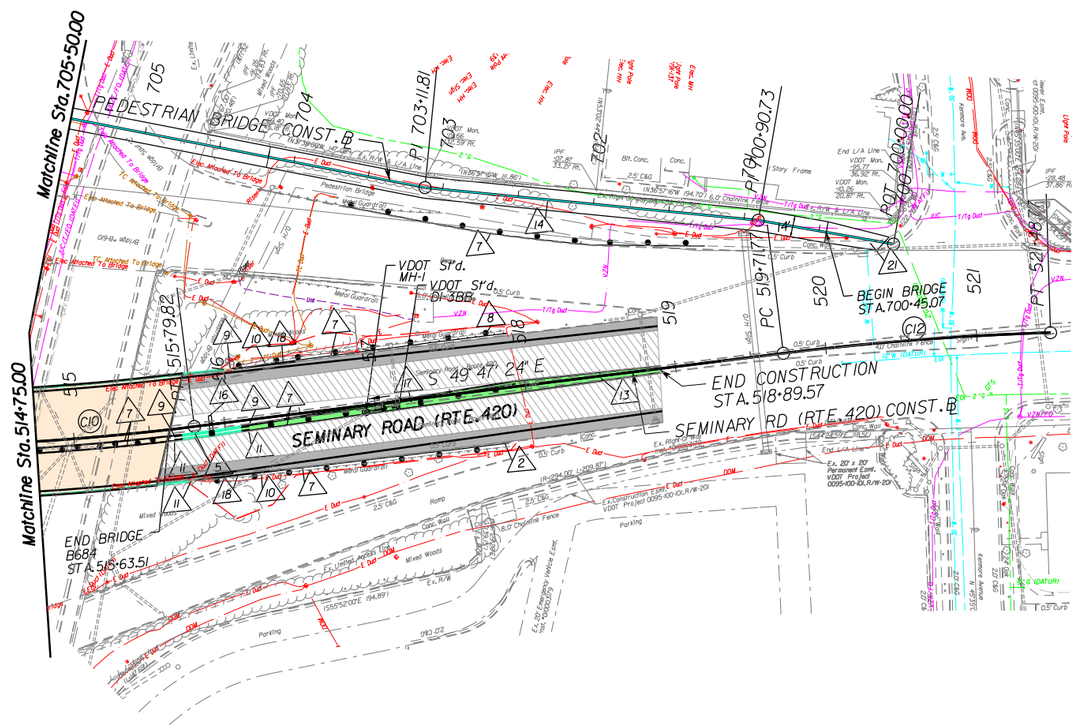

(C9) Curve SEMINARYRD-1
PI = 501+37.24
DELTA = 8° 13' 41.09" (RT)
D = 3° 00' 11"
T = 137.24'
L = 274.00'
R = 1,908.00'
PC = 500+00.00
PT = 502+74.00
LS = See Profile Sheet
V = 40 MPH
E = 2.70%

(C11) Curve PED-1
PI = 715+08.94
DELTA = 3° 32' 54.66" (RT)
D = 2° 09' 44"
T = 82.09'
L = 164.12'
R = 2,650.00'
PC = 714+26.85
PT = 715+90.98

(C10) Curve SEMINARYRD-2
PI = 512+93.56
DELTA = 18° 22' 59.98" (LT)
D = 3° 10' 59"
T = 291.27'
L = 577.53'
R = 1,800.00'
PC = 510+02.29
PT = 515+79.82
LS = See Profile Sheet
V = 40 MPH
E = 2.80%

(C12) Curve SEMINARYRD-3
PI = 520+60.34
DELTA = 5° 18' 54.89" (RT)
D = 3° 00' 11"
T = 88.56'
L = 177.00'
R = 1,908.00'
PC = 519+71.77
PT = 521+48.77
LS = See Profile Sheet
V = 40 MPH
E = 2.00%

1. ST'D CG-3 REQ'D
2. ST'D GR-11 REQ'D
3. RETAINING WALL
4. MSE WALL
5. ST'D MB-7F REQ'D
6. POTENTIAL NOISE WALL
7. ST'D GR-2 REQ'D
8. ST'D GR-9 REQ'D
9. ST'D GR-FOA-2 TYPE 1
10. REMOVE EXISTING GUARDRAIL
11. ST'D GR-FOA-2 TYPE 2
12. ST'D MB-7D REQ'D
13. ST'D MS-1 REQ'D
14. PROP. PEDESTRIAN BRIDGE
15. ST'D MB-8A TYPE 1
16. HOV DIRECTIONAL GATE
17. REMOVE EXISTING MEDIAN
18. ST'D CG-2 REQ'D
19. ST'D MB-7E REQ'D
20. PROP. IMPACT ATTENUATOR SERVICE TYPE I, TL-3
21. PROPOSED SIDEWALK
22. ST'D MC-3B REQ'D
23. REMOVE EX. CONCRETE DITCH
24. ST'D GR-2A REQ'D

SCALE
0 100' 200'

PARSONS

PLAN SHEET - 7

PROJECT	SHEET NO.
0395-100-722/736	11

1/3/2013
12:40:03 AM

PROJECT MANAGER Archer Western Construction LLC.
SURVEYED BY Archer Western Construction LLC.
DESIGN SUPERVISED BY Parsons Transportation Group
DESIGNED BY Parsons Transportation Group

REVISED	STATE	STATE ROUTE	STATE PROJECT	SHEET NO.
	VA.	395	0395-100-722/ 736 C501	12

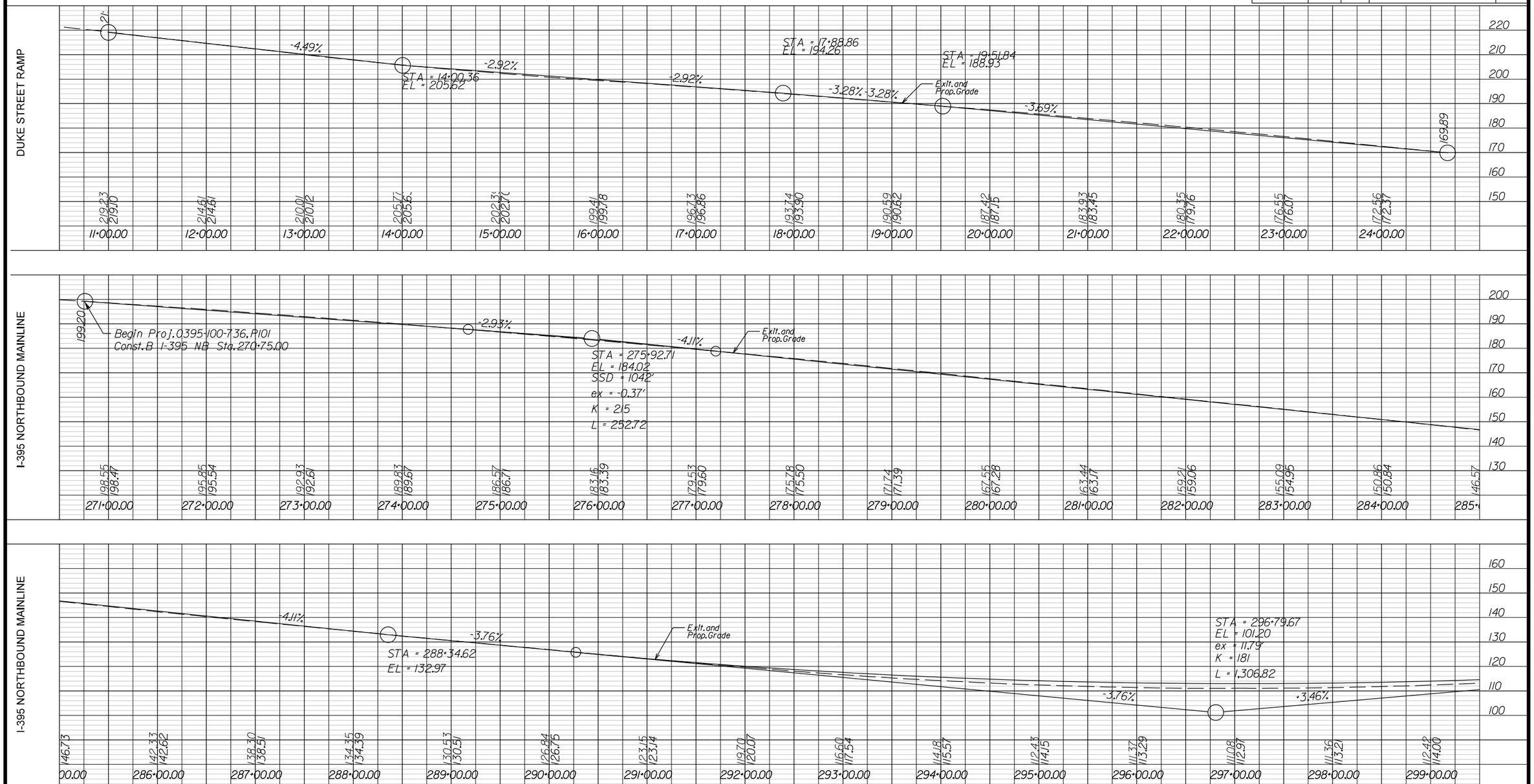

SCALE 0 20' 40

SCALE 0 50' 100'

THESE PLANS ARE UNFINISHED AND UNAPPROVED AND ARE NOT TO BE USED FOR ANY TYPE OF CONSTRUCTION OR THE ACQUISITION OF RIGHT OF WAY.

PARSONS

PROFILE - 1

PROJECT	SHEET NO.
0395-100-722/736	12

1/3/2013
12:41:18 AM

PROJECT MANAGER Archer Western Construction LLC.
SURVEYED BY Archer Western Construction LLC.
DESIGN SUPERVISED BY Parsons Transportation Group
DESIGNED BY Parsons Transportation Group

REVISED	STATE	STATE ROUTE	STATE PROJECT	SHEET NO.
	VA.	395	0395-100-722/ 736 C501	13

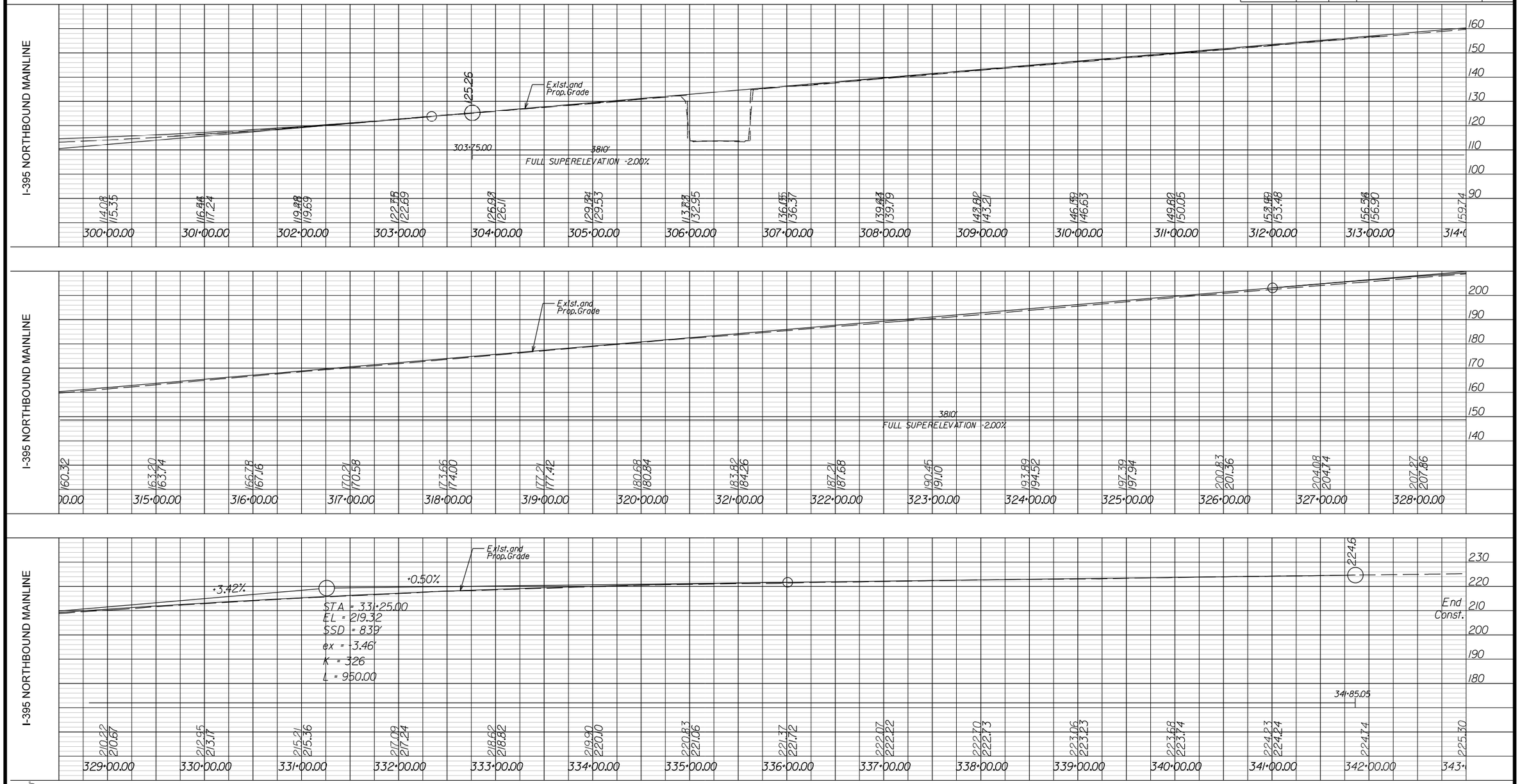

SCALE 0 20' 40'

SCALE 0 50' 100'

THESE PLANS ARE UNFINISHED AND UNAPPROVED AND ARE NOT TO BE USED FOR ANY TYPE OF CONSTRUCTION OR THE ACQUISITION OF RIGHT OF WAY.

PARSONS

PROFILE - 2

PROJECT	SHEET NO.
0395-100-722/736	13

1/3/2013
12:41:46 AM

PROJECT MANAGER Archer Western Construction LLC.
SURVEYED BY Archer Western Construction LLC.
DESIGN SUPERVISED BY Parsons Transportation Group
DESIGNED BY Parsons Transportation Group

REVISED	STATE	STATE ROUTE	STATE PROJECT	SHEET NO.
	VA.	395	0395-100-722/ 736 C501	14

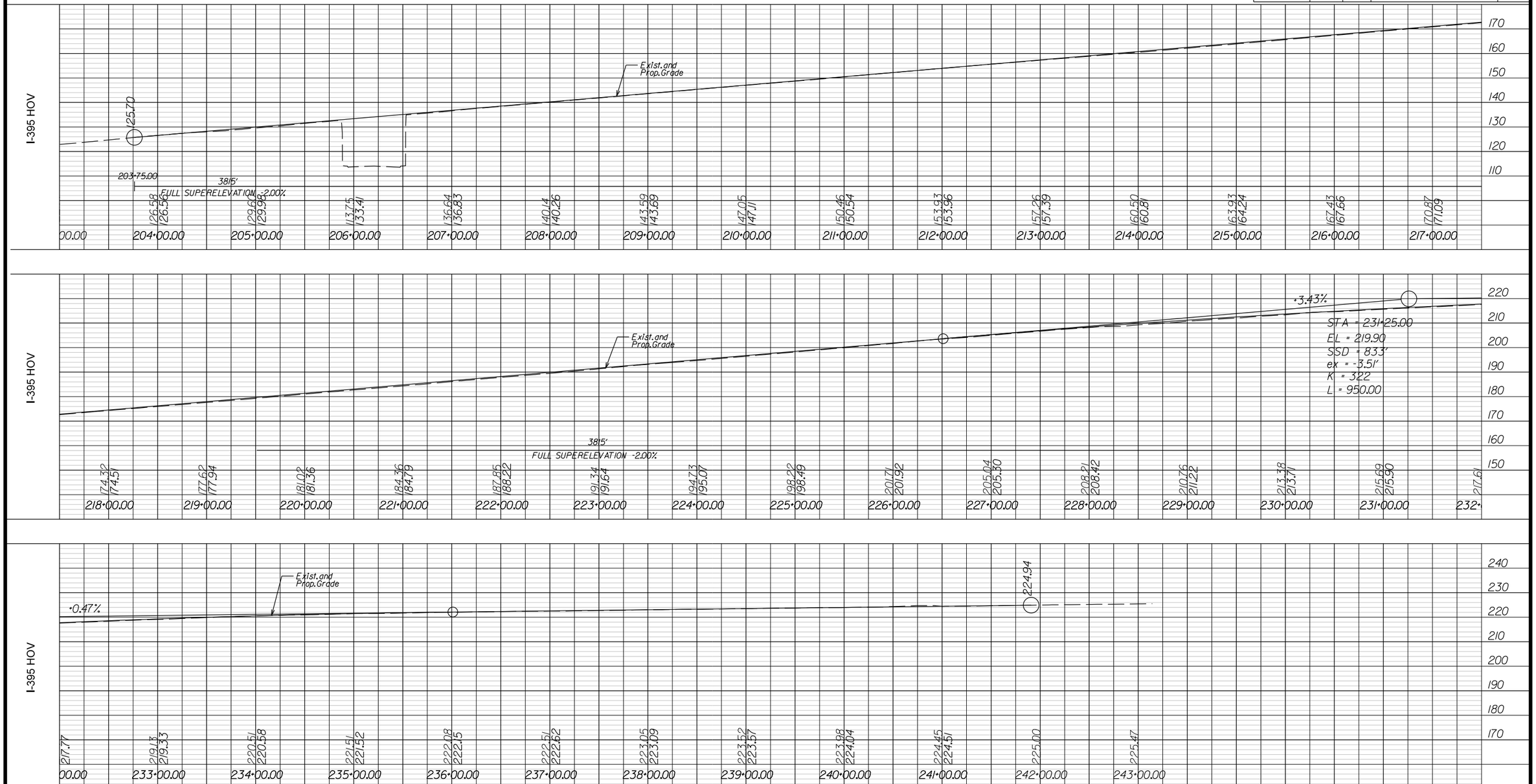

SCALE 0 20' 40'

SCALE 0 50' 100'

THESE PLANS ARE UNFINISHED AND UNAPPROVED AND ARE NOT TO BE USED FOR ANY TYPE OF CONSTRUCTION OR THE ACQUISITION OF RIGHT OF WAY.

PARSONS

PROFILE - 3

PROJECT	SHEET NO.
0395-100-722/736	14

1/3/2013
12:42:10 AM

PROJECT MANAGER Archer Western Construction LLC.
SURVEYED BY Archer Western Construction LLC.
DESIGN SUPERVISED BY Parsons Transportation Group
DESIGNED BY Parsons Transportation Group

REVISED	STATE	STATE ROUTE	STATE PROJECT	SHEET NO.
	VA.	395	0395-100-722/ 736 C501	15

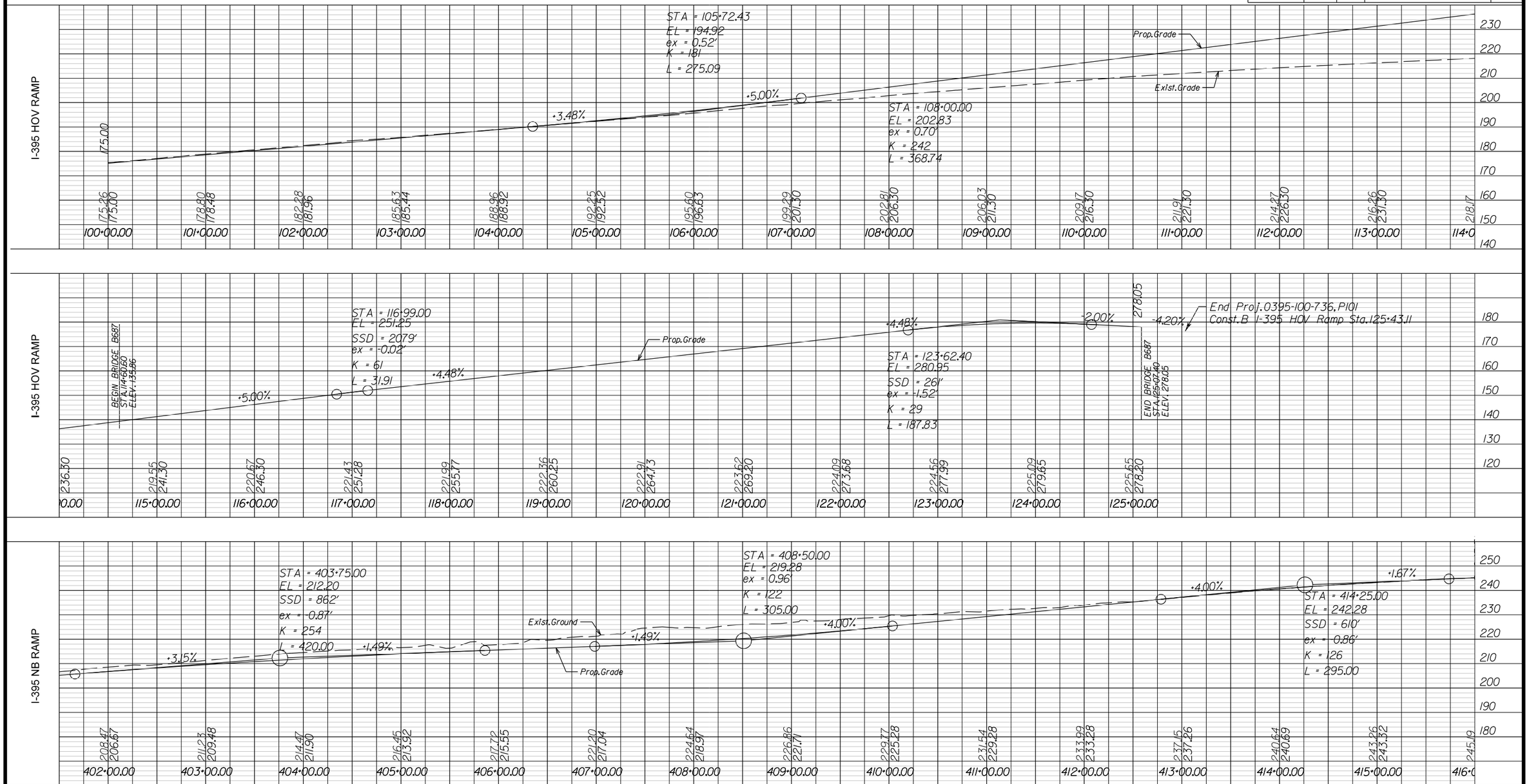

SCALE 0 20' 40'

SCALE 0 50' 100'

THESE PLANS ARE UNFINISHED AND UNAPPROVED AND ARE NOT TO BE USED FOR ANY TYPE OF CONSTRUCTION OR THE ACQUISITION OF RIGHT OF WAY.

PARSONS

PROFILE - 4

PROJECT	SHEET NO.
0395-100-722/736	15

1/3/2013
12:42:36 AM

PROJECT MANAGER Archer Western Construction LLC.
SURVEYED BY Archer Western Construction LLC.
DESIGN SUPERVISED BY Parsons Transportation Group
DESIGNED BY Parsons Transportation Group

REVISED	STATE	STATE ROUTE	STATE PROJECT	SHEET NO.
	VA.	395	0395-100-722/ 736 C501	16

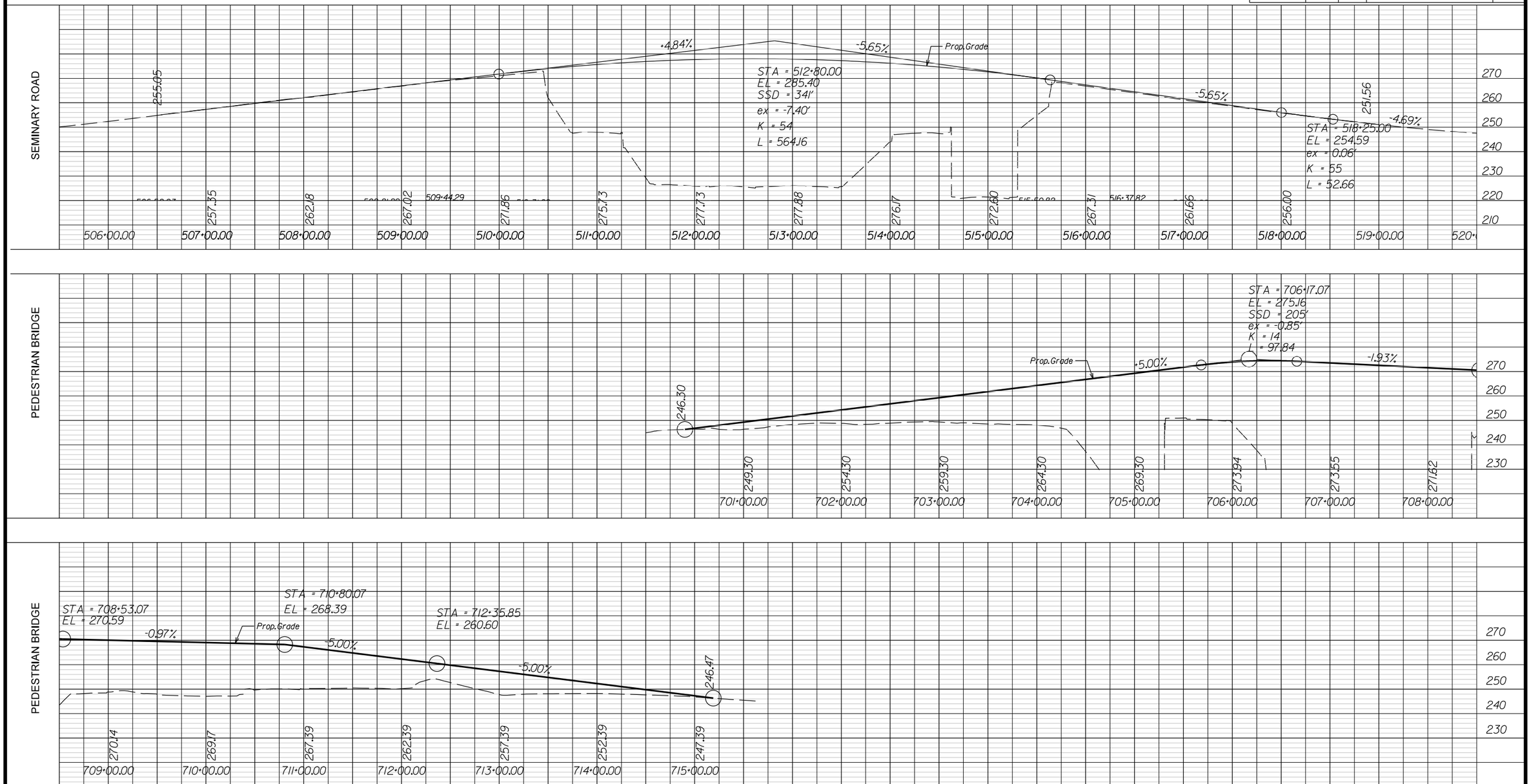

SCALE 0 20' 40'

SCALE 0 50' 100'

THESE PLANS ARE UNFINISHED AND UNAPPROVED AND ARE NOT TO BE USED FOR ANY TYPE OF CONSTRUCTION OR THE ACQUISITION OF RIGHT OF WAY.

PARSONS

PROFILE - 5

PROJECT	SHEET NO.
0395-100-722/736	16

1/2/2013
11:48:09 PM

PROJECT MANAGER Archer Western Construction LLC.
SURVEYED BY Archer Western Construction LLC.
DESIGN SUPERVISED BY Parsons Transportation Group
DESIGNED BY Parsons Transportation Group

THESE PLANS ARE UNFINISHED AND UNAPPROVED AND ARE NOT TO BE USED FOR ANY TYPE OF CONSTRUCTION OR THE ACQUISITION OF RIGHT OF WAY.

REVISED	STATE	STATE ROUTE	STATE PROJECT	SHEET NO.
	VA.	395	0395-100-722/ 736 C501	17

DESIGN FEATURES RELATING TO CONSTRUCTION OR TO REGULATION AND CONTROL OF TRAFFIC MAY BE SUBJECT TO CHANGE AS DEEMED NECESSARY BY THE DEPARTMENT

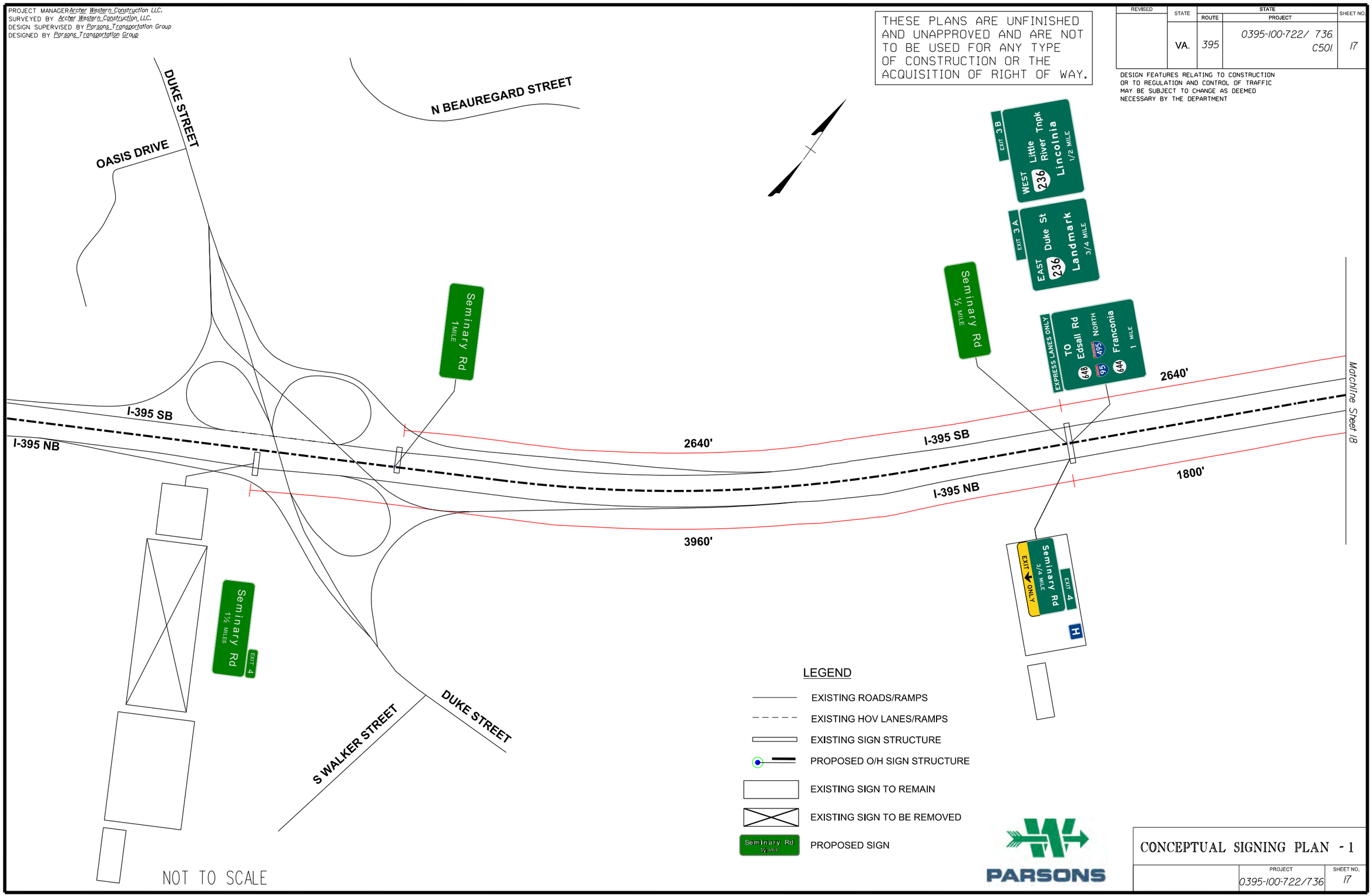

PARSONS

CONCEPTUAL SIGNING PLAN - 1

PROJECT	SHEET NO.
0395-100-722/736	17

1/2/2013
11:48:32 PM

PROJECT MANAGER Archer Western Construction LLC.
SURVEYED BY Archer Western Construction LLC.
DESIGN SUPERVISED BY Parsons Transportation Group
DESIGNED BY Parsons Transportation Group

THESE PLANS ARE UNFINISHED AND UNAPPROVED AND ARE NOT TO BE USED FOR ANY TYPE OF CONSTRUCTION OR THE ACQUISITION OF RIGHT OF WAY.

REVISED	STATE	STATE ROUTE	STATE PROJECT	SHEET NO.
	VA.	395	0395-100-722/ 736 C501	18

DESIGN FEATURES RELATING TO CONSTRUCTION OR TO REGULATION AND CONTROL OF TRAFFIC MAY BE SUBJECT TO CHANGE AS DEEMED NECESSARY BY THE DEPARTMENT

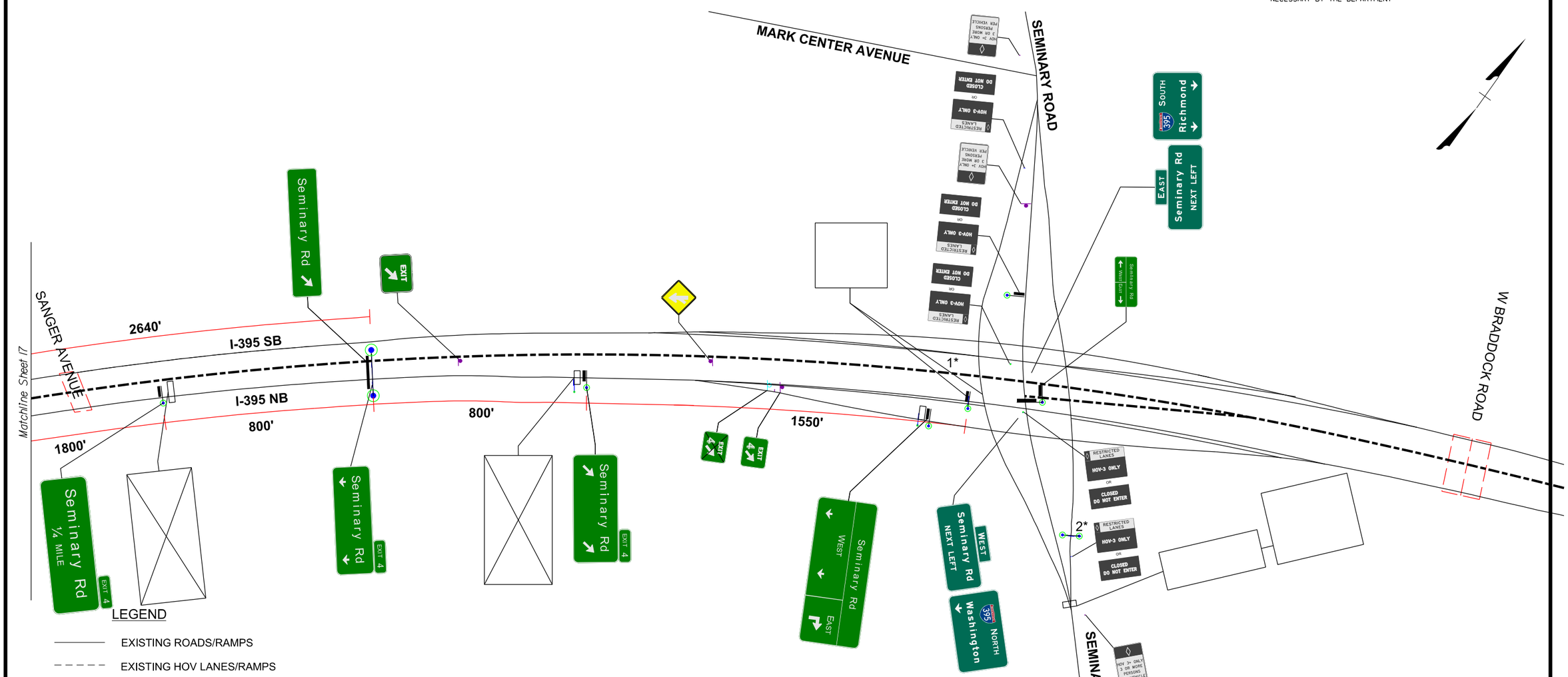

LEGEND

- EXISTING ROADS/RAMPS
- EXISTING HOV LANES/RAMPS
- EXISTING SIGN STRUCTURE
- PROPOSED O/H SIGN STRUCTURE
- EXISTING SIGN TO REMAIN
- EXISTING SIGN TO BE REMOVED
- PROPOSED SIGN
- PROPOSED GROUND MOUNTED SIGN SUPPORT

NOT TO SCALE

1* REMOVE EXISTING SIGN FROM BRIDGE WALL AND REPLACE
2* REMOVE EXISTING SIGNS FROM EXISTING PEDESTRIAN BRIDGE AND REPLACE

PARSONS

CONCEPTUAL SIGNING PLAN - 2

PROJECT	SHEET NO.
0395-100-722/736	18

1/2/2013
11:48:56 PM

PROJECT MANAGER Archer Western Construction LLC.
SURVEYED BY Archer Western Construction LLC.
DESIGN SUPERVISED BY Parsons Transportation Group
DESIGNED BY Parsons Transportation Group

THESE PLANS ARE UNFINISHED AND UNAPPROVED AND ARE NOT TO BE USED FOR ANY TYPE OF CONSTRUCTION OR THE ACQUISITION OF RIGHT OF WAY.

REVISED	STATE	ROUTE	PROJECT	SHEET NO.
	VA.	395	0395-100-722/ 736 C501	19

DESIGN FEATURES RELATING TO CONSTRUCTION OR TO REGULATION AND CONTROL OF TRAFFIC MAY BE SUBJECT TO CHANGE AS DEEMED NECESSARY BY THE DEPARTMENT

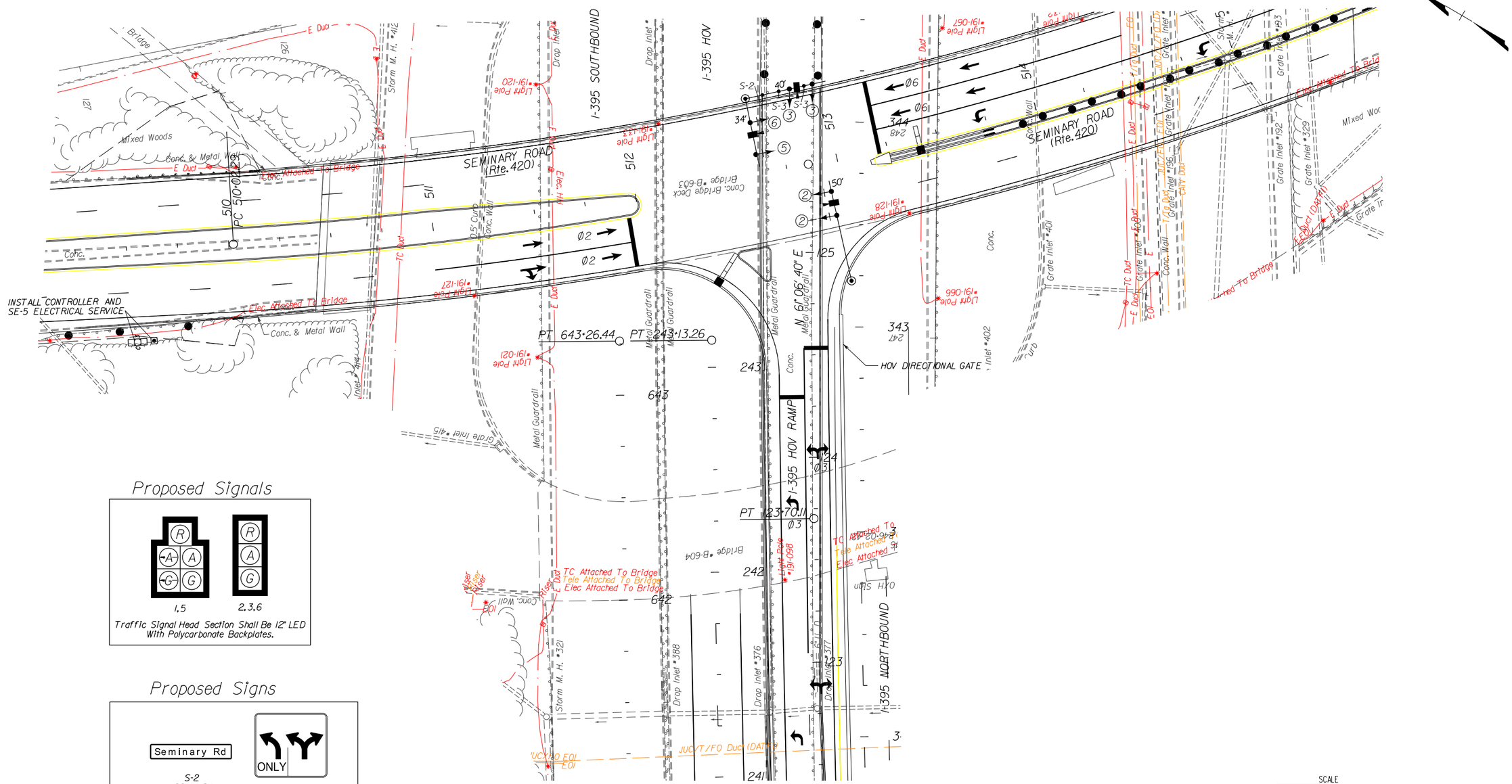

Proposed Signals

Traffic Signal Head Section Shall Be 12" LED With Polycarbonate Backplates.

Proposed Signs

S-2 (96" x 18")

S-3 (30" x 36")

SCALE 0 25' 50'

PARSONS

CONCEPTUAL SIGNAL PLAN

PROJECT	SHEET NO.
0395-100-722/736	19

PROJECT MANAGER Archer Western Construction LLC.
SURVEYED BY Archer Western Construction LLC.
DESIGN SUPERVISED BY Parsons Transportation Group
DESIGNED BY Parsons Transportation Group

THESE PLANS ARE UNFINISHED AND UNAPPROVED AND ARE NOT TO BE USED FOR ANY TYPE OF CONSTRUCTION OR THE ACQUISITION OF RIGHT OF WAY.

REVISED	STATE	STATE ROUTE	STATE PROJECT	SHEET NO
	VA.	395	0395-100-722/ 736 C501	20

DESIGN FEATURES RELATING TO CONSTRUCTION OR TO REGULATION AND CONTROL OF TRAFFIC MAY BE SUBJECT TO CHANGE AS DEEMED NECESSARY BY THE DEPARTMENT

I-395/SEMINARY RD UTILITY CONFLICT MATRIX

Utility ID (.sdb)	Owner of Utility	Location (NB Station)	Utility Type	OH/Buried	Size	Length	Comments	Notes:	Profile Provided	Relocation (N=Not likely, P=Possible, L=Likely)
U1	Dominion Virginia Power	266+01	Electric Duct	Buried		7640'	Runs entire length of project along Auxiliary and HOV design from beginning of Duke St NB On Ramp to End of Seminary NB Exit Ramp	Will need to be relocated outside the proposed shoulder along the entire project length. "U1" designates the electric line that runs along the entire project as well as any parallel lines that stem from it. All electric boxes, meters, and light poles will need to be moved as well. Along I-395, there are 52 light poles impacted by the design. These will be replaced by 43 VDOT R&B Standard 40'- LP-1 - 400W luminaires. **See Note A		L
U2	VDOT	267+40	Fiber Optic Telephone Duct	Buried		7505'	Runs entire length of project along Auxiliary and HOV design from Duke St Ramp Sta. 12+40 to End of Seminary NB Exit Ramp	Will need to be relocated outside the proposed shoulder along the entire project length.		L
U3	Dominion Virginia Power	267+45	Electric Duct	Buried		60'	Crosses Duke St on-ramp at 12+40, runs under current road alignment.	Care should be taken in final design not ot lower the existing profile so this line is not affected. This line will need to be extended to tie in to the new alignment of U1.		P
U4	VDOT	268+36	Fiber Optic Telephone Duct	Buried		57'	Crosses Duke St on-ramp at 13+25, runs under current road alignment	Care should be taken in final design not ot lower the existing profile so this line is not affected. This line will need to be extended to tie in to the new alignment of U2.		P
U5	Dominion Virginia Power	269+39	Electric Duct	Buried		53'	Crosses Duke St on-ramp at 14+35, runs under current road alignment	Care should be taken in final design not ot lower the existing profile so this line is not affected. This line will need to be extended to tie in to the new alignment of U1.		P
U6	Dominion Virginia Power	282+84	Electric	OH		361'	Crosses I-395 at NB Sta. 282+80, runs over current interstate alignment	Lines connect to electric poles that are 361' apart. These lines should meet vertical clearance requiments in the final design and relocation is not foreseeable given the proposed geometry.		N
U7	Alexandria Sanitation Authority	292+28	Sanitary Sewer	Buried	30" Concrete Pipe	429'	Crosses I-395 at NB Sta. 292+25, runs under current interstate alignment	Care should be taken in the final design not to lower the existing profile so this line is not affected. Removal or relocation are not foreseen given the current proposed geometry.		N
U8	Dominion Virginia Power	300+60	Electric Duct	Buried		111'	According to Record: Crosses I-395 baseline at 300+60	Care should be taken in the final design not to lower the existing profile so this line is not affected. Removal or relocation are not foreseen given the current proposed geometry.		N
U9	Dominion Virginia Power	310+45	Electric	OH		289'	Crosses I-395 at NB Sta. 310+43	Lines connect to electric poles that are 289' apart. These lines should meet vertical clearance requirements for the proposed HOV ramp. Removal and/or relocationa are not foreseen given the current proposed geometry.		N
U10	VDOT	335+35	Traffic Control Duct	Buried		48'	Crosses Seminary Exit ramp baseline at 409+31. Does not cross centerline. Runs through resurfaced pavement and between proposed guardrails.	Traffic control boxes will need to be moved inside the proposed shoulders and the line will most likely be shortened to fit inside the proposed geometry.		L
U11	Dominion Virginia Power	335+82	Electric Duct	Buried		494'	Crosses Seminary Exit ramp baseline at 409+75, NB Mainline at 335+80 and HOV at 235+xx	Will need to be relocated due to lowering the Seminary exit ramp profile.	X	L
U12	Washington Gas	335+90	Gas	Buried	12" gas main in 16" casing	404'	Crosses Seminary Exit Ramp baseline at 409+83, NB Mainline at 335+87, and HOV at 236+xx	Will need to be relocated due to lowering the Seminary exit ramp profile.	X	L
U13	Virginia American Water	336+05	Water	Buried	24" pipe in 42" casing	458'	Crosses Seminary Exit Ramp baseline at 409+97	Will need to be relocated due to lowering the Seminary exit ramp profile.	X	L
U14	Verizon/AT&T	336+09	Telephone/Fiber Optic Duct	Buried		521'	Crosses Seminary Exit Ramp baseline at 410+02	Will need to be relocated due to lowering the Seminary exit ramp profile.	X	L

PARSONS

UTILITY MATRIX - 1

PROJECT	SHEET NO.
0395-100-722/736	20

PROJECT MANAGER Archer Western Construction LLC.
SURVEYED BY Archer Western Construction LLC.
DESIGN SUPERVISED BY Parsons Transportation Group
DESIGNED BY Parsons Transportation Group

THESE PLANS ARE UNFINISHED AND UNAPPROVED AND ARE NOT TO BE USED FOR ANY TYPE OF CONSTRUCTION OR THE ACQUISITION OF RIGHT OF WAY.

REVISED	STATE	STATE ROUTE	STATE PROJECT	SHEET NO
	VA.	395	0395-100-722/ 736 C501	21

DESIGN FEATURES RELATING TO CONSTRUCTION OR TO REGULATION AND CONTROL OF TRAFFIC MAY BE SUBJECT TO CHANGE AS DEEMED NECESSARY BY THE DEPARTMENT

U15	Dominion Virginia Power	339+10	Electric Duct	Buried		105'	Crosses Seminary Exit Ramp baseline at 413+02. Set of three lines diverging from U22.	Connects to electric hand holes that will be relocated outside the proposed shoulder. Line will need to be extended to connect to the new hand hole locations.		L
U16	Dominion Virginia Power	339+11	Electric Duct	Buried		112'	Crosses Seminary Exit Ramp baseline at 413+04. Set of three lines diverging from U22.	Connects to electric hand holes that will be relocated outside the proposed shoulder. Line will need to be extended to connect to the new hand hole locations.		L
U17	Dominion Virginia Power	339+13	Electric Duct	Buried		115'	Crosses Seminary Exit Ramp baseline at 413+06. Set of three lines diverging from U22.	Connects to electric hand holes that will be relocated outside the proposed shoulder. Line will need to be extended to connect to the new hand hole locations.		L
U18	Jones Utilities Construction	340+95	Telephone/ Fiber Optic Duct	Buried		421'	Crosses Seminary Exit Ramp baseline at 414+84, NB Mainline at 340+15, and HOV at 241+xx	Care should be taken in the final design not to lower the existing profile so this line is not affected. Removal or relocation are not foreseen given the current proposed geometry.	X	N
U19	VDOT	341+15	Traffic Control	Buried		66'	Crosses Seminary Exit Ramp baseline at 415+06	May need to be relocated due to lowering the Seminary exit ramp profile.		P
U20	VDOT	341+21	Fiber Optic Telephone Duct	Buried		143'	Crosses Seminary Exit Ramp baseline at 415+12	May need to be relocated due to lowering the Seminary exit ramp profile.		P
U21	Dominion Virginia Power	334+31	Electric Duct	Buried		881'	Runs along/under I395 proposed design from 334+30 to end of project	Will need to be relocated outside proposed shoulder.	X	L
U22	Dominion Virginia Power	339+16	Electric Duct	Buried		198'	Crosses I-395 SB, HOV, and I-395 NB at NB Sta. 339+17. Splits into three wires across NB Exit Ramp.	Connects to electric hand hole that may be relocated. Line will need to be extended to connect to the new hand hole location.		P
U23	Dominion Virginia Power	339+19	Electric Duct	Buried		299'	Runs under proposed NB Exit Ramp shoulder from, 413+10 to end of ramp	Will need to be relocated outside of the ramp shoulder.		
U24	Dominion Virginia Power	345+56	Electric Duct	Buried		80'	Runs under Seminary Road east of bridge.	Care should be taken in the final design not to lower the existing profile so this line is not affected. Removal or relocation are not foreseen given the current proposed geometry.		N
** Note A	In regards to utility U1, the proposed lighting plan for I-395 is as follows: 1. The proposed pedestrian bridge will require 19 pedestrian decorative 150W luminaires spaced every 80'. 2. Along I-395, there are 52 light poles impacted by the design. These will be replaced by 43 VDOT R&B Standard 40'- LP-1 - 400W luminaires. 3. The existing 20' light pole on Sanger Ave (impacted by the project design) shall be replaced with an underpass wall pack 150W luminaire.									

PARSONS

UTILITY MATRIX - 2

PROJECT	SHEET NO.
0395-100-722/736	21

1/2/2013
11:50:47 PM

PROJECT MANAGER Archer Western Construction LLC.
SURVEYED BY Archer Western Construction LLC.
DESIGN SUPERVISED BY Parsons Transportation Group
DESIGNED BY Parsons Transportation Group

THESE PLANS ARE UNFINISHED AND UNAPPROVED AND ARE NOT TO BE USED FOR ANY TYPE OF CONSTRUCTION OR THE ACQUISITION OF RIGHT OF WAY.

REVISED	STATE	STATE ROUTE	STATE PROJECT	SHEET NO.
	VA.	395	0395-100-722/ 736 C501	22

DESIGN FEATURES RELATING TO CONSTRUCTION OR TO REGULATION AND CONTROL OF TRAFFIC MAY BE SUBJECT TO CHANGE AS DEEMED NECESSARY BY THE DEPARTMENT.

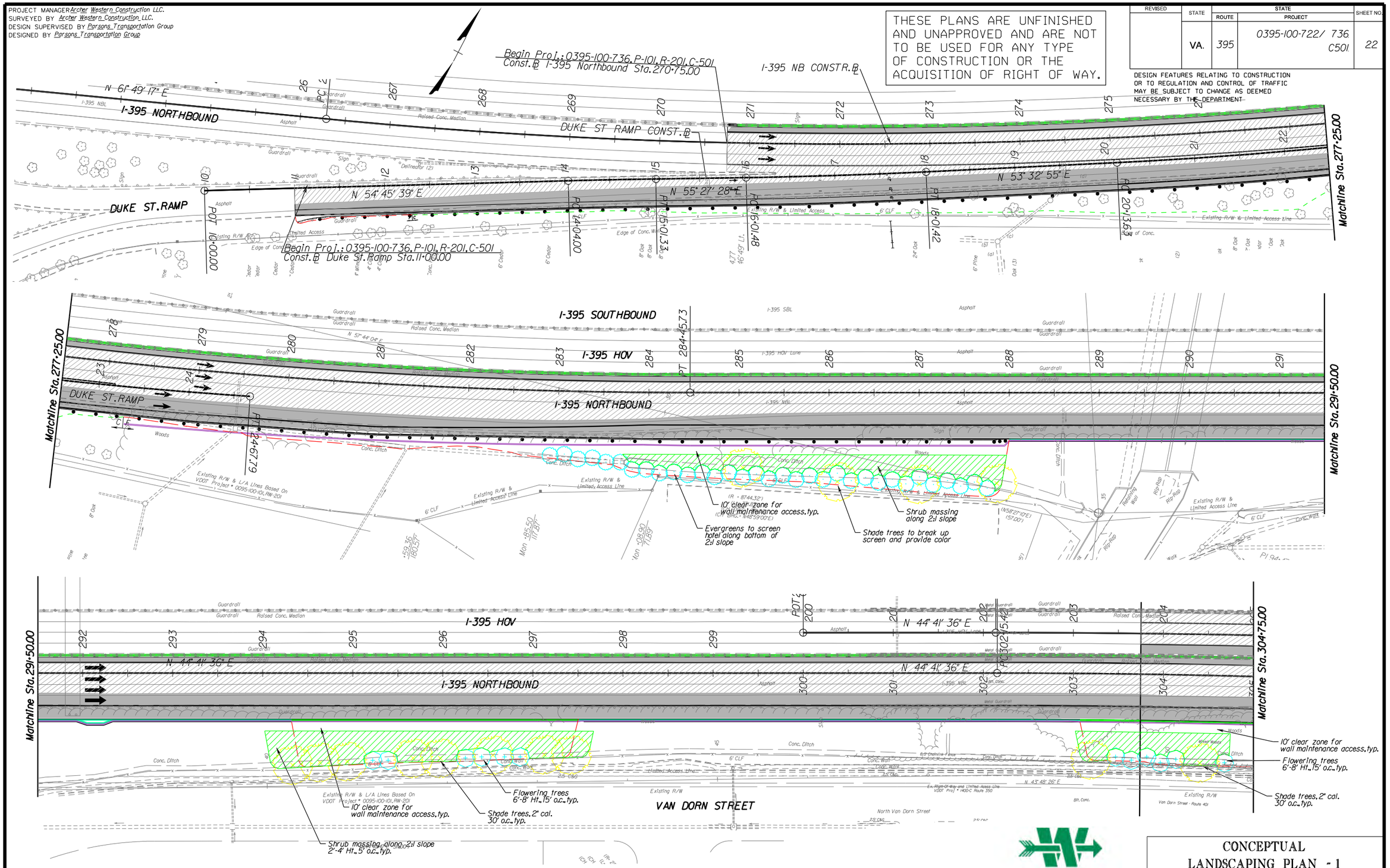

PARSONS

CONCEPTUAL LANDSCAPING PLAN - 1

PROJECT	SHEET NO.
0395-100-722/736	22

1/2/2013
11:51:54 PM

PROJECT MANAGER Archer Western Construction LLC.
SURVEYED BY Archer Western Construction LLC.
DESIGN SUPERVISED BY Parsons Transportation Group
DESIGNED BY Parsons Transportation Group

REVISED	STATE	STATE ROUTE	STATE PROJECT	SHEET NO.
	VA.	395	0395-100-722/ 736 C501	23

THESE PLANS ARE UNFINISHED AND UNAPPROVED AND ARE NOT TO BE USED FOR ANY TYPE OF CONSTRUCTION OR THE ACQUISITION OF RIGHT OF WAY.

DESIGN FEATURES RELATING TO CONSTRUCTION OR TO REGULATION AND CONTROL OF TRAFFIC MAY BE SUBJECT TO CHANGE AS DEEMED NECESSARY BY THE DEPARTMENT

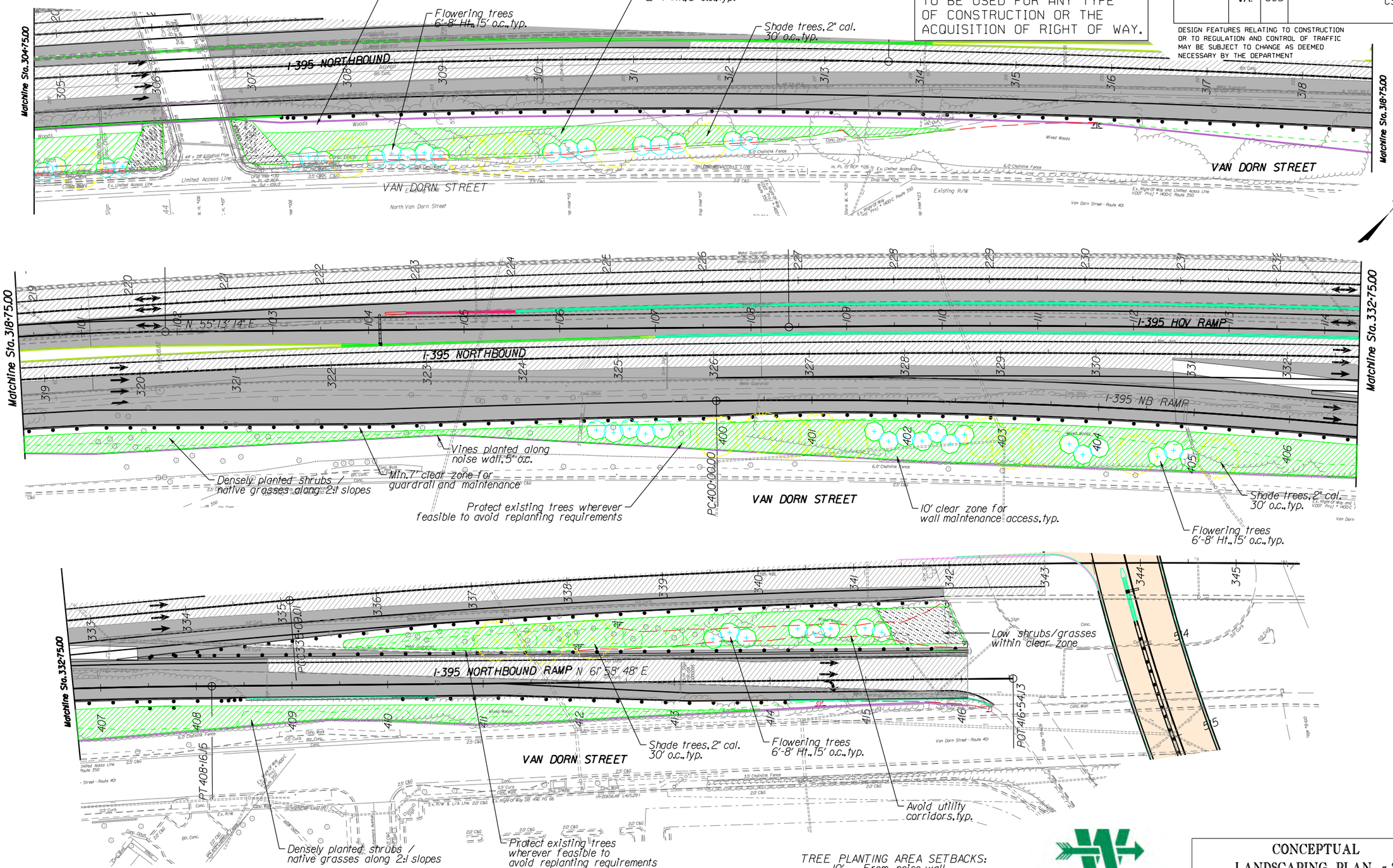

TREE PLANTING AREA SETBACKS:
10' From noise wall
5' From top of slope

PARSONS

CONCEPTUAL LANDSCAPING PLAN - 2

PROJECT	SHEET NO.
0395-100-722/736	23

STATE	FEDERAL AID ROUTE	FEDERAL AID PROJECT	STATE ROUTE	STATE PROJECT	SHEET NO.
VA.	—	.	395	0395-100-722, B684	S1
NBIS Number:		.	UPC No.	.	
Federal Oversight Code:		F.O	FHWA Construction and Scour Code:	.	

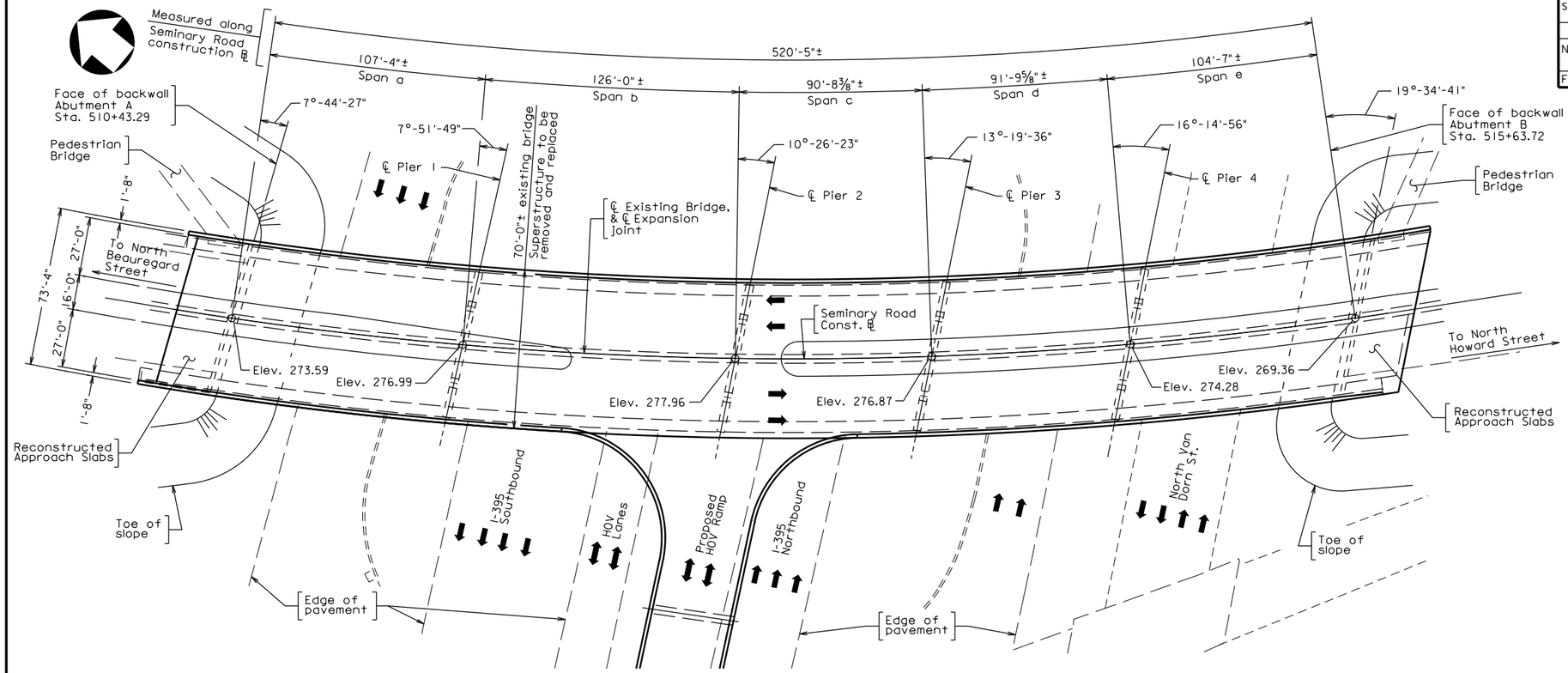

PLAN

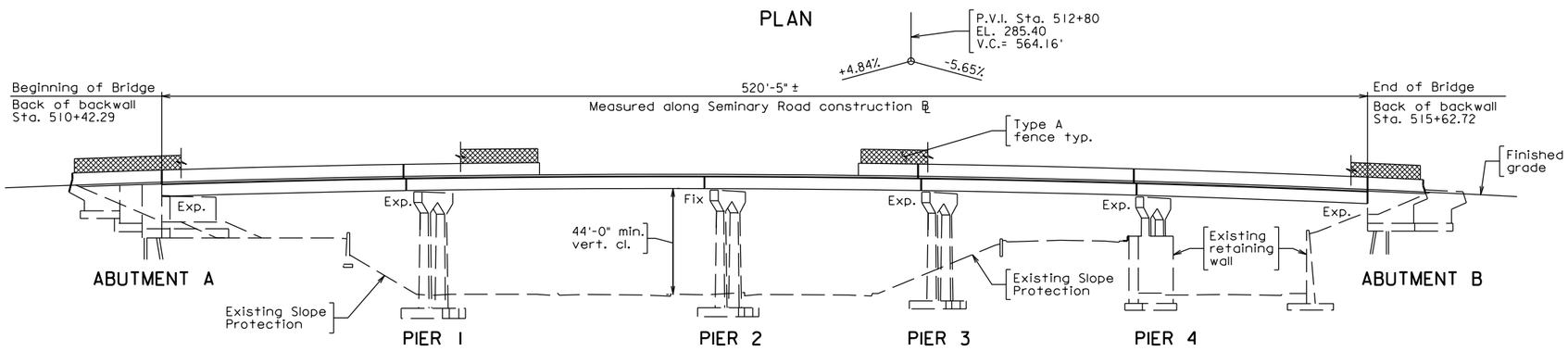

ELEVATION

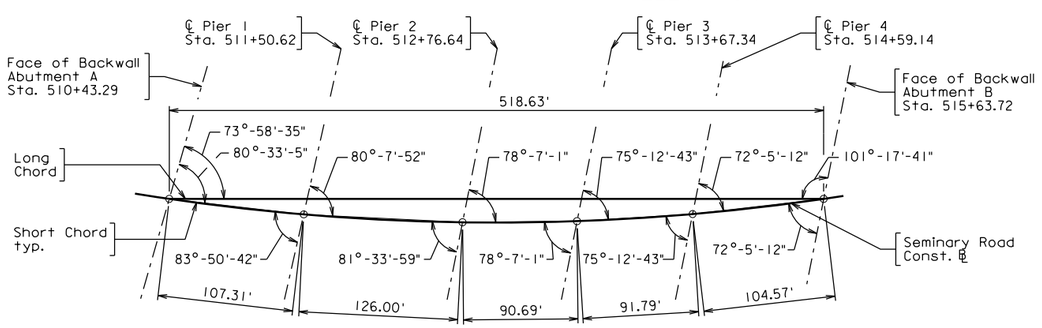

BRIDGE LAYOUT

Scale 1" = 30'

Note:
Proposed HOV Ramp not shown on elevation for clarity.

DESIGN EXCEPTION(S):

None

GENERAL NOTES:

Width: 27'-0" face-to-face of curbs - Westbound.
27'-0" face-to-face of curbs - Eastbound.

Span layout: 107'-4" - 126'-0" - 90'-8" - 91'-9" - 104'-7" continuous steel plate girder spans.

Capacity: HL-93 loading.

Specifications:

Construction: Virginia Department of Transportation Road and Bridge Specifications, 2007.

Design: AASHTO LRFD Bridge Design Specifications, 5th Edition, including 2010 Interim Specifications; and VDOT Modifications.

Standards: Virginia Department of Transportation Road and Bridge Standards, 2008.

These plans are incomplete unless accompanied by the Supplemental Specifications and Special Provisions included in the contract documents.

The existing structure is designated a Type B structure in accordance with Sec. 411.

VDOT

COMMONWEALTH OF VIRGINIA
DEPARTMENT OF TRANSPORTATION
PROPOSED BRIDGE ON

SEMINARY ROAD OVER I-395
CITY OF ALEXANDRIA - 0.1 MI. N. SANGER AVE.
PROJ. 0395-100-722, B684

PARSONS

ALA
ATHAVALE, LYSTAD & ASSOCIATES INC.

No.	Description	Date

REVISIONS

For Table of Revision see sheet 4.

Recommended for Approval: _____ State Structure and Bridge Engineer _____ Date

Approved: _____ Chief Engineer _____ Date

Date: December, 2012

© 2012, Commonwealth of Virginia

Sheet S1

001_Sem.dgn

STATE	FEDERAL AID ROUTE	FEDERAL AID PROJECT	STATE ROUTE	STATE PROJECT	SHEET NO.
VA.	—	.	395	0395-100-722, B684	S2

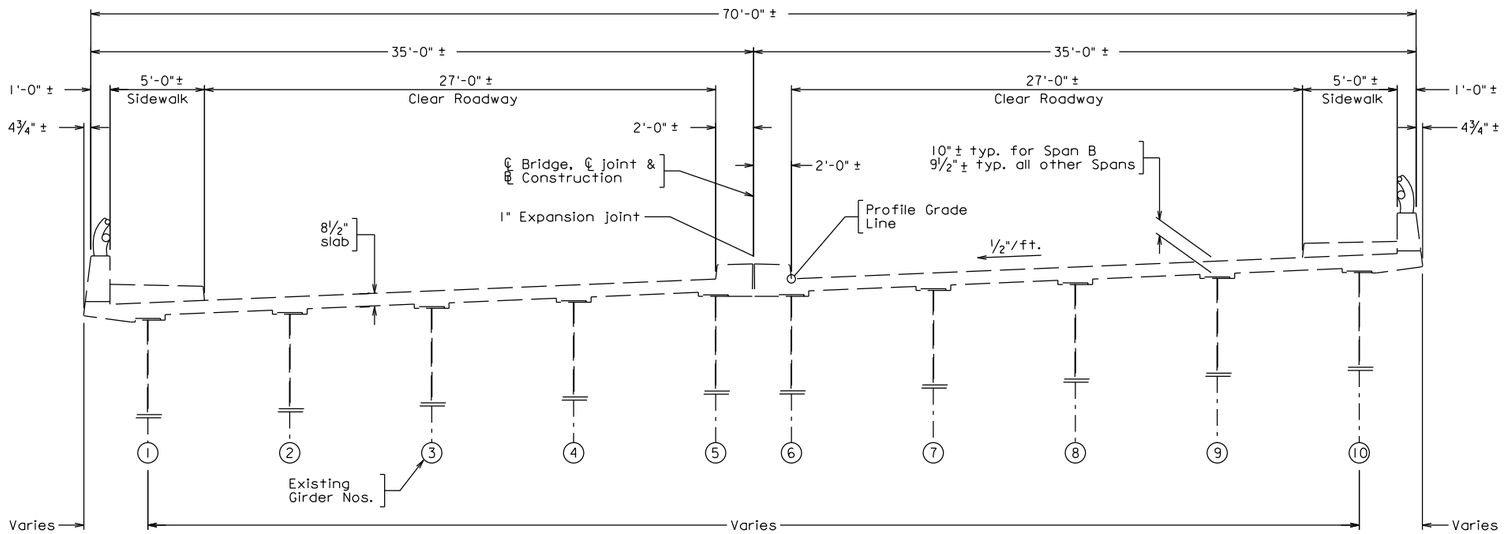

EXISTING TYPICAL SECTION

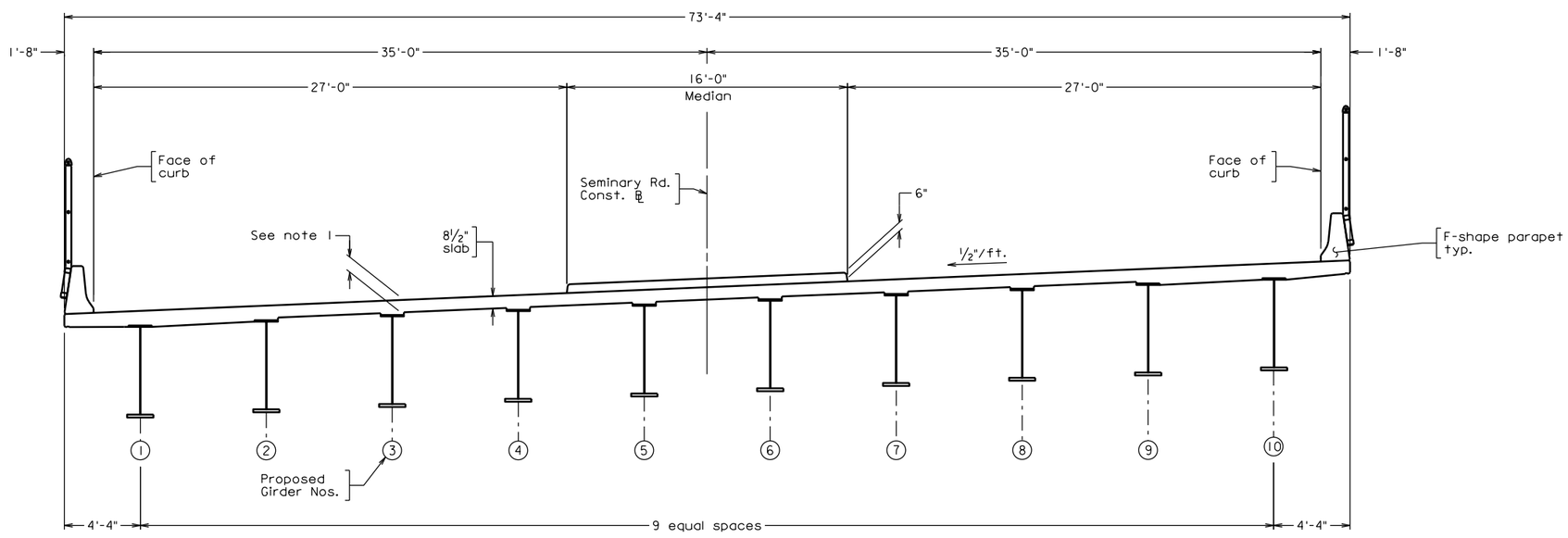

PROPOSED TYPICAL SECTION

Notes:

1. Haunch thickness varies from one side of the expansion joint to the other to provide a uniform riding surface at the expansion joint.
2. Existing concrete deck, concrete median, sidewalks, parapets, metal railing, steel framing, bearings, approach slabs and pier pedestals shall be completely removed and replaced.

Scale: ¼" = 1'-0"

PARSONS

ALA
ATHAVALE, LYSTAD & ASSOCIATES INC.

© 2012, Commonwealth of Virginia

No.	Description	Date
	Revisions	

COMMONWEALTH OF VIRGINIA
DEPARTMENT OF TRANSPORTATION

STRUCTURE AND BRIDGE DIVISION

TRANSVERSE SECTIONS

Designed: D.W. Drawn: J.E. Checked: T.L.	Date	Plan No.	Sheet No.
	Dec. 2012		S2

002_Sem.dgn

STATE	FEDERAL AID ROUTE	FEDERAL AID PROJECT	STATE ROUTE	STATE PROJECT	SHEET NO.
VA.	—	.	395	0395-100-722, B684	S3

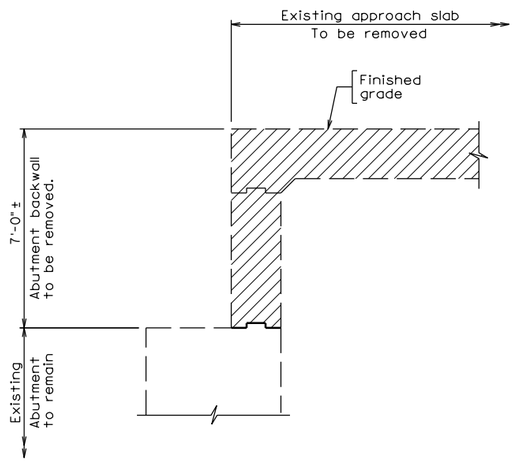

ABUTMENT REMOVAL

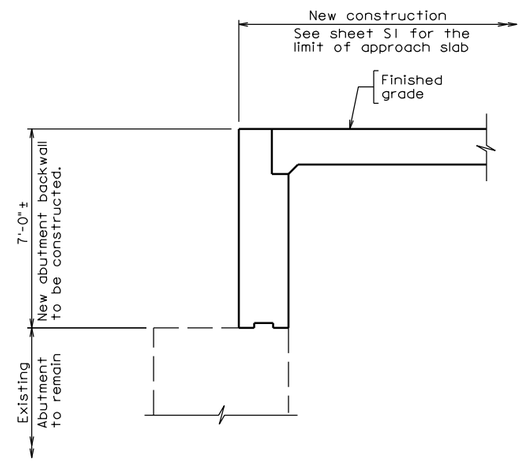

ABUTMENT CONSTRUCTION

Notes:

Approach slabs shall be removed and reconstructed entirely at both abutments.

All the wingwalls shall be removed and reconstructed as shown in the details for entire length of the wingwalls.

Contractor shall maintain existing vertical bars in backwall and wingwall and lap existing bars with new reinforcement.

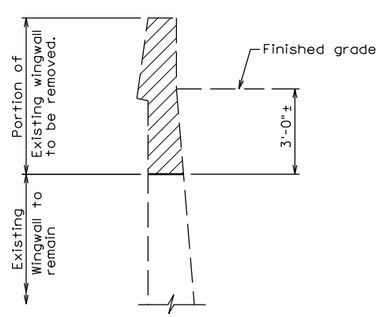

WINGWALL REMOVAL

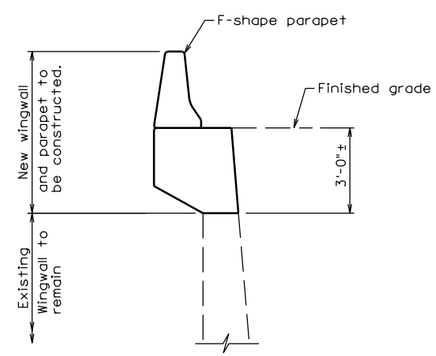

WINGWALL CONSTRUCTION

003_Sem.dgn

Scale: 3/8" = 1'-0"

PARSONS

ALA
ATHAVALE, LYSTAD & ASSOCIATES INC.

© 2012, Commonwealth of Virginia

No.	Description	Date

Revisions

COMMONWEALTH OF VIRGINIA
DEPARTMENT OF TRANSPORTATION

STRUCTURE AND BRIDGE DIVISION

ABUTMENT AND WINGWALL DETAILS

Designed: D.W. / Drawn: J.E. / Checked: J.L.	Date	Plan No.	Sheet No.
	Dec. 2012		S3

STATE	FEDERAL AID ROUTE	FEDERAL AID PROJECT	STATE ROUTE	STATE PROJECT	SHEET NO.
VA.	—	.	395	0395-100-722, B687	S4
NBIS Number:		.	UPC No.	.	
Federal Oversight Code:		F.O	FHWA Construction and Scour Code:	•	

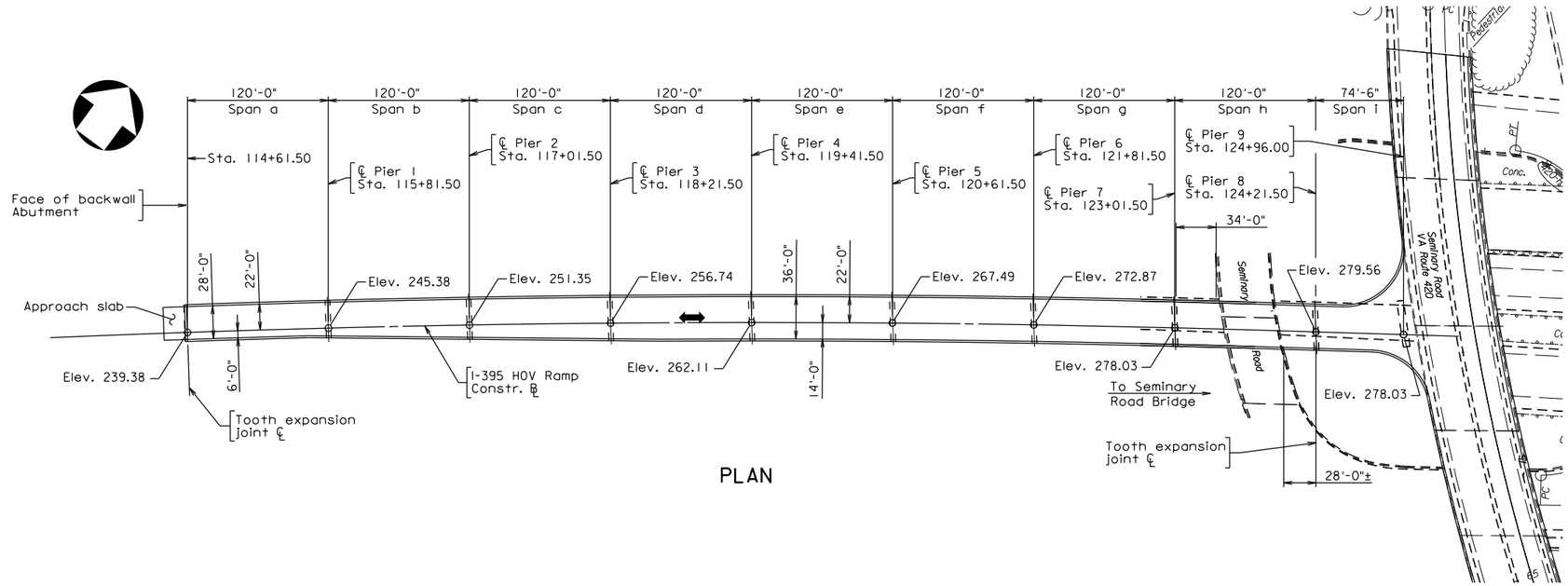

PLAN

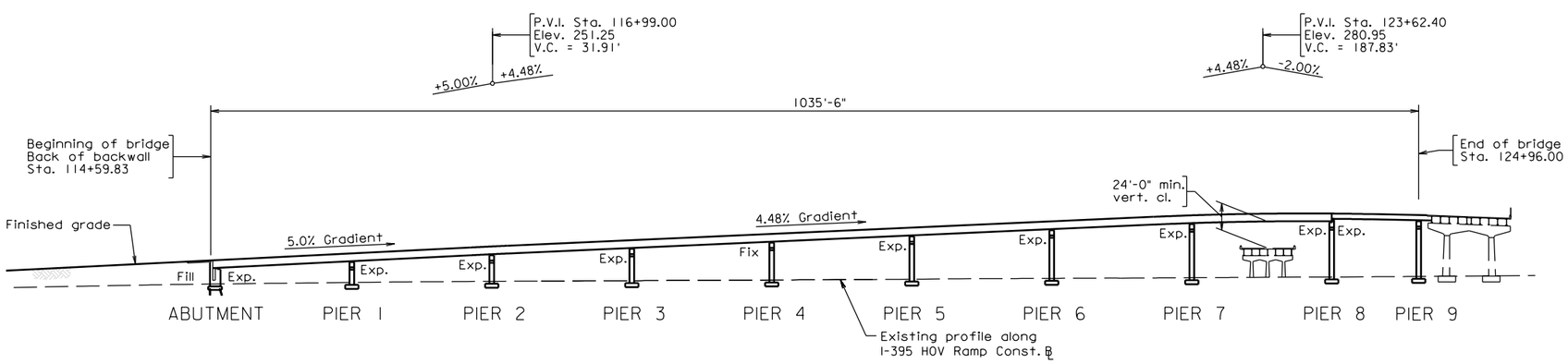

DEVELOPED SECTION ALONG ℄

DESIGN EXCEPTION(S):

None

GENERAL NOTES:

Width: 28'-0" face-to-face of curbs (Sta. 114+60 to Sta. 115+64).
Transitions from 28'-0" to 36'-0" face-to-face of curbs (Sta. 115+64 to Sta. 118+64).
36'-0" face-to-face of curbs (Sta. 118+64 to Sta. 124+43).

Span layout: Spans a-h = 120'-0"
Span i = 74'-6"

Capacity: HL-93 loading.

Specifications:

Construction: Virginia Department of Transportation Road and Bridge Specifications, 2007.

Design: AASHTO LRFD Bridge Design Specifications, 5th Edition, 2010; 2010 Interim Specifications; and VDOT Modifications.

Standards: Virginia Department of Transportation Road and Bridge Standards, 2008.

These plans are incomplete unless accompanied by the Supplemental Specifications and Special Provisions included in the contract documents.

• Seminary Road not shown for clarity.

VDOT

COMMONWEALTH OF VIRGINIA
DEPARTMENT OF TRANSPORTATION
PROPOSED BRIDGE ON

I-395 HOV RAMP OVER SEMINARY ROAD
CITY OF ALEXANDRIA - 0.1 MI. N. SANGER AVE.
PROJ. 0395-100-722, B687

PARSONS

ALA
ATHAVALE, LYSTAD & ASSOCIATES INC.

Scale 1" = 60'

No.	Description	Date

REVISIONS

For Table of Revision see sheet 4.

Recommended for Approval: _____ State Structure and Bridge Engineer _____ Date

Approved: _____ Chief Engineer _____ Date

Date: December, 2012

© 2012, Commonwealth of Virginia

004_Ramp.dgn

STATE	FEDERAL AID ROUTE	FEDERAL AID PROJECT	STATE ROUTE	STATE PROJECT	SHEET NO.
VA.	—	.	395	0395-100-722, B687	S5

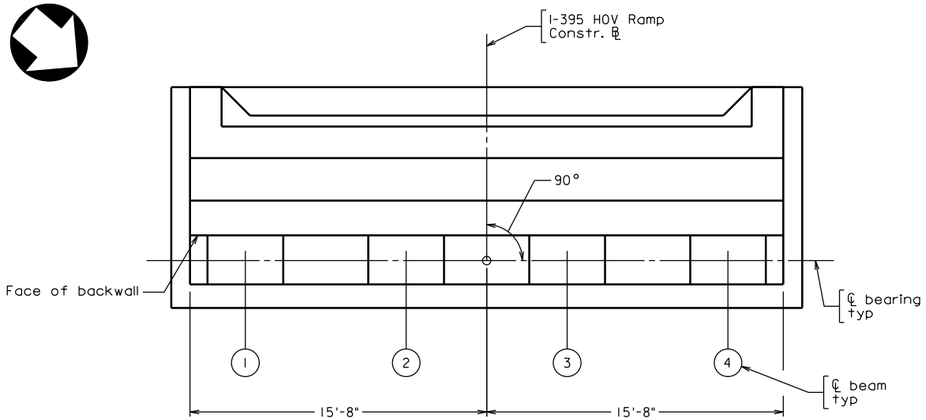

PLAN

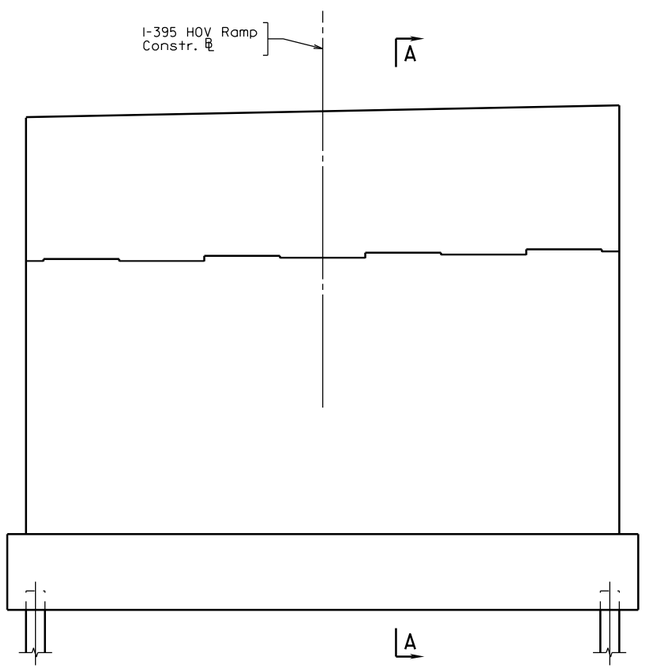

ELEVATION

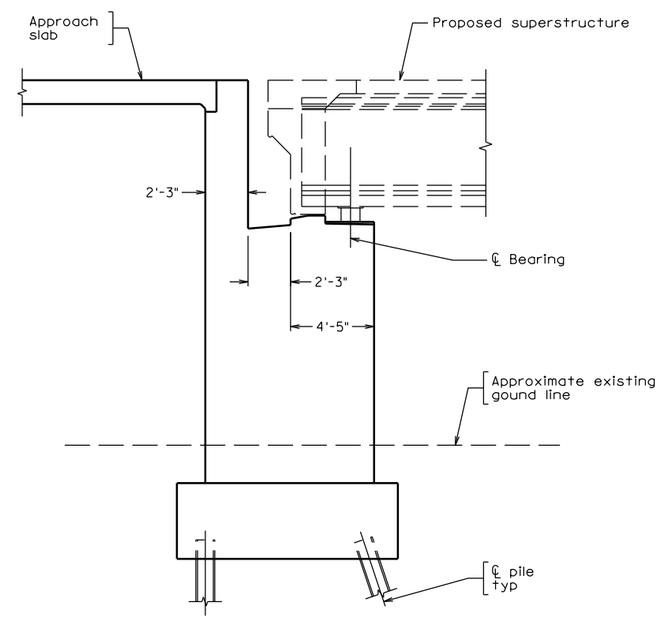

SECTION A-A

005_Ramp.dgn

Scale: 1/4" = 1'-0"

PARSONS

ALA
ATHAVALE, LYSTAD & ASSOCIATES INC.

© 2012, Commonwealth of Virginia

No.	Description	Date

Revisions

COMMONWEALTH OF VIRGINIA
DEPARTMENT OF TRANSPORTATION

STRUCTURE AND BRIDGE DIVISION

ABUTMENT DETAILS

Designed: D.W. / Drawn: J.E. / Checked: T.L.	Date	Plan No.	Sheet No.
	Dec. 2012		S5

STATE	FEDERAL AID ROUTE	FEDERAL AID PROJECT	STATE ROUTE	STATE PROJECT	SHEET NO.
VA.	—	.	395	0395-100-722, B687	S6

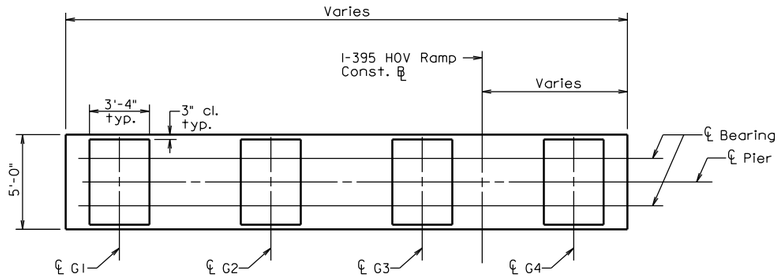

TYPICAL PLAN
Pier 1-3

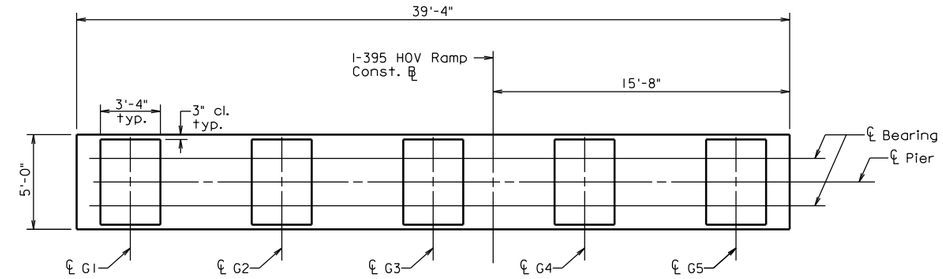

TYPICAL PLAN
Pier 4-8

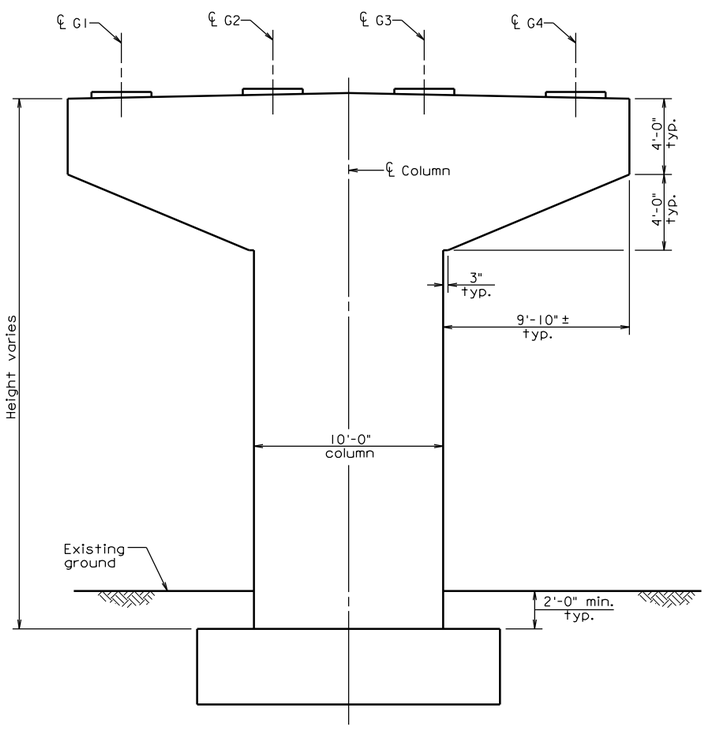

TYPICAL PIER ELEVATION
Pier 1 shown, Pier 2 similar

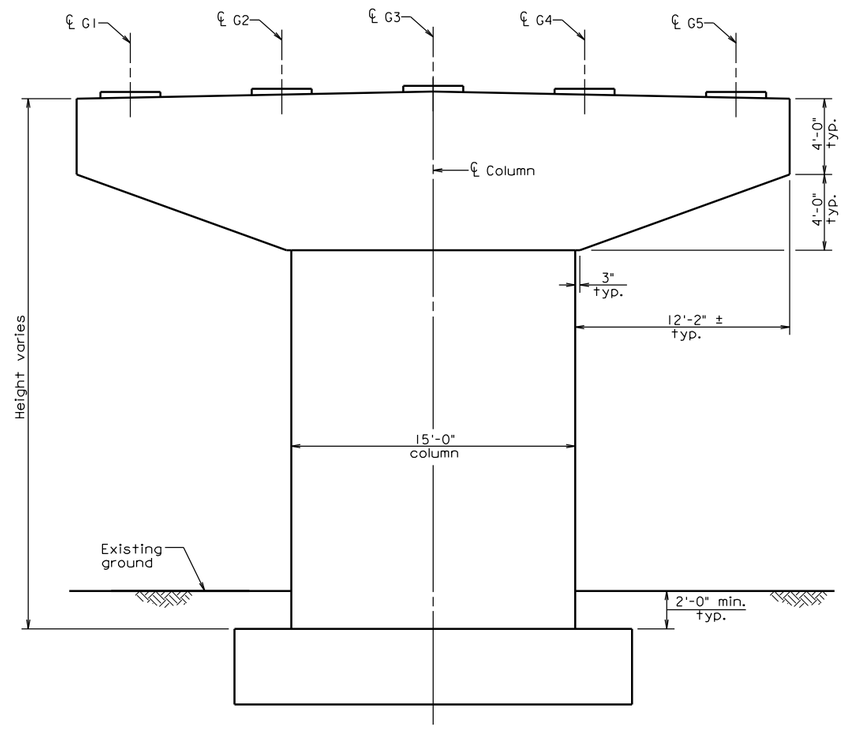

TYPICAL PIER ELEVATION
Pier 3-8

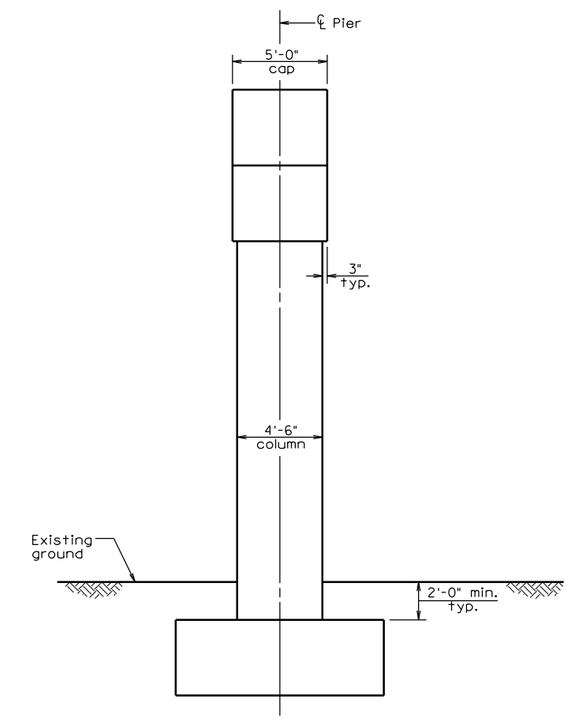

END VIEW
Pier 1-8

Scale: 1/4" = 1'-0"

PARSONS

ALA
ATHAVALE, LYSTAD & ASSOCIATES INC.

© 2012, Commonwealth of Virginia

No.	Description	Date

Revisions

COMMONWEALTH OF VIRGINIA
DEPARTMENT OF TRANSPORTATION

STRUCTURE AND BRIDGE DIVISION

PIER DETAILS

Designed: D.W.	Date	Plan No.	Sheet No.
Drawn: J.E.	Dec. 2012		S6
Checked: T.L.			

006_Ramp.dgn

STATE	FEDERAL AID ROUTE	FEDERAL AID PROJECT	STATE ROUTE	STATE PROJECT	SHEET NO.
VA.	—	.	395	0395-100-722, B687	S7

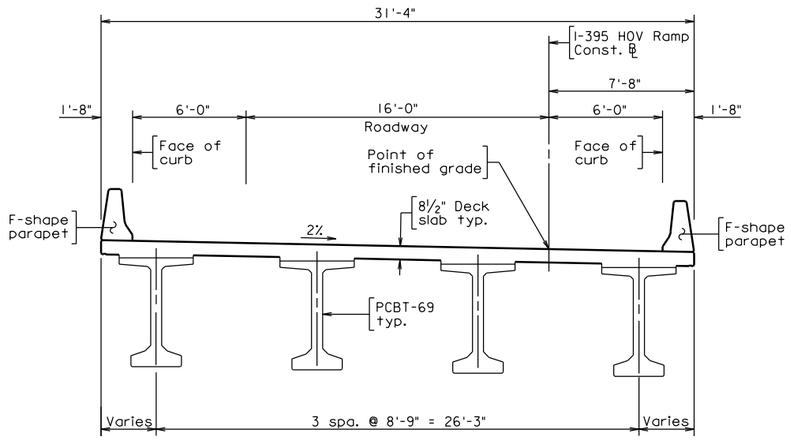

TRANSVERSE SECTION
Span a

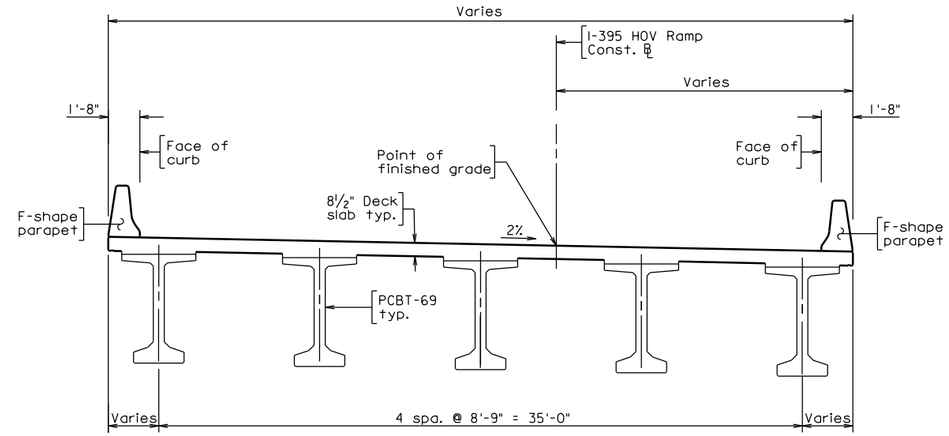

TRANSVERSE SECTION
Spans b and c

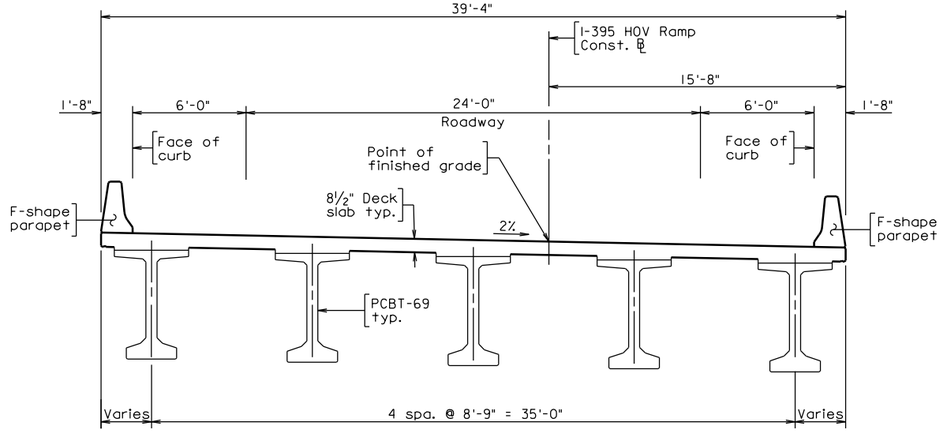

TRANSVERSE SECTION
Spans d-h

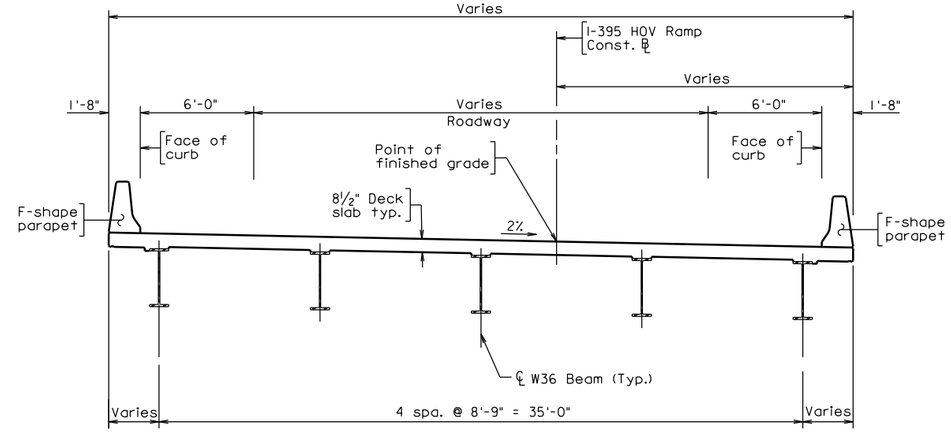

TRANSVERSE SECTION
Span i

007_Ramp.dgn

Scale: ¼" = 1'-0"

PARSONS

ALA
ATHAVALE, LYSTAD & ASSOCIATES INC.

© 2012, Commonwealth of Virginia

No.	Description	Date

Revisions

COMMONWEALTH OF VIRGINIA
DEPARTMENT OF TRANSPORTATION

STRUCTURE AND BRIDGE DIVISION

TRANSVERSE SECTIONS

Designed: D.W. Drawn: J.F. Checked: T.H.	Date	Plan No.	Sheet No.
	Dec. 2012		S7

STATE	FEDERAL AID ROUTE	FEDERAL AID PROJECT	STATE ROUTE	STATE PROJECT	SHEET NO.
VA.	—				S08
NBIS Number:			UPC No.		
Federal Oversight Code: FO			FHWA Construction and Scour Code:		

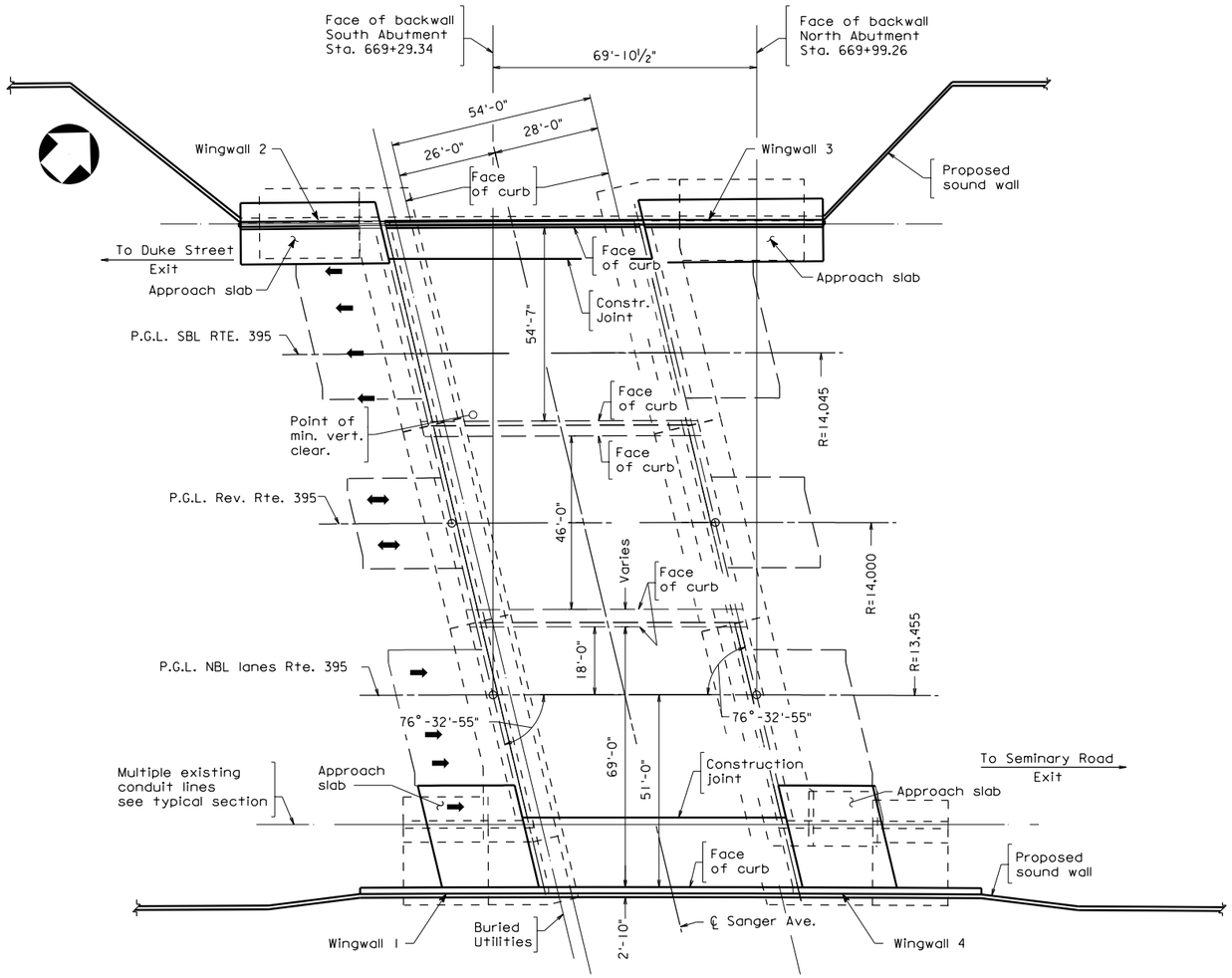

PLAN

Scale: 1" = 20'-0"

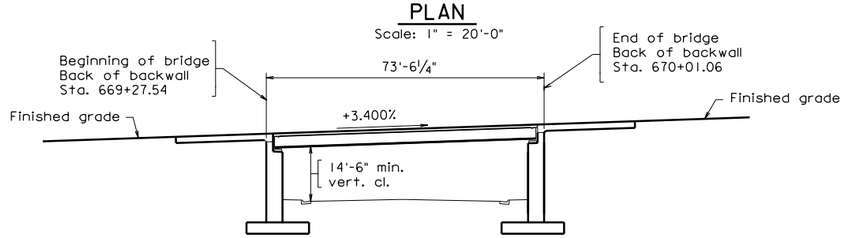

SOUTH ABUTMENT NORTH ABUTMENT

DEVELOPED SECTION ALONG P.G.L. NBL RTE. 395

Scale: 1" = 20'-0"

DESIGN EXCEPTION(S):

GENERAL NOTES:

The original approved sheet, including original signatures, is filed in the VDOT Central Office. Any misuse of electronic files, including scanned signatures is illegal. Violators will be prosecuted to the full extent of the applicable laws.

Width: 68'-0" face-to-face of curb.

Span layout: 70'-0" Steel beam Simple Span

Capacity: HS20-44 loading and alternate military loading - original design.
HL-93 loading - widening.

Specifications:

Construction: Virginia Department of Transportation Road and Bridge Specifications, 2007.

Design: AASHTO LRFD Bridge Design Specifications, 5th Edition, 2010; 2010 Interim Specifications; and VDOT Modifications.

Standards: Virginia Department of Transportation Road and Bridge Standards, 2008.

These plans are incomplete unless accompanied by the Supplemental Specifications and Special Provisions included in the contract documents.

Bridge No. of existing bridge is 2805. Plan No. is 200-05.

VDOT

COMMONWEALTH OF VIRGINIA
DEPARTMENT OF TRANSPORTATION
PROPOSED BRIDGE ON

SANGER AVENUE
GENERAL
PLAN AND ELEVATION

PARSONS

No.	Description	Date

REVISIONS

Recommended for Approval: _____
State Structure and Bridge Engineer Date

Approved: _____
Chief Engineer Date

Date:

© 2012, Commonwealth of Virginia

STATE	FEDERAL AID ROUTE	FEDERAL AID PROJECT	STATE ROUTE	STATE PROJECT	SHEET NO.
VA.	—	.	395	0395-100-722, B685	S09

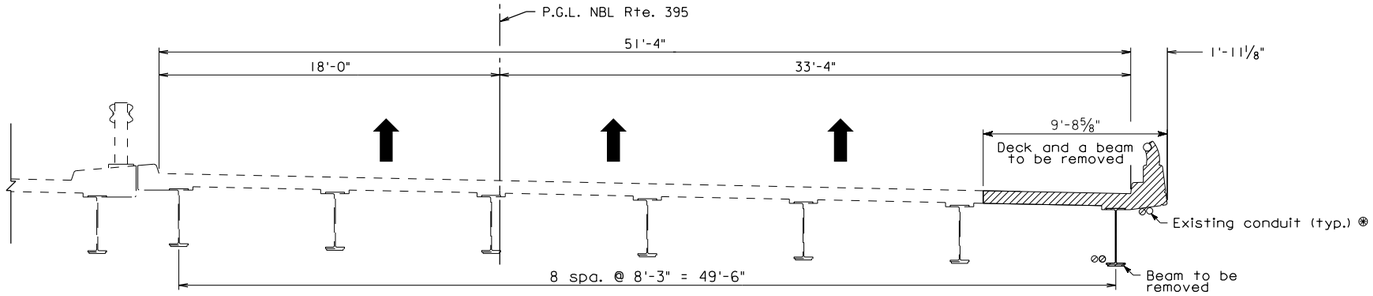

EXISTING N.B.L. TRANSVERSE SECTION

Scale: ¼" = 1'-0"

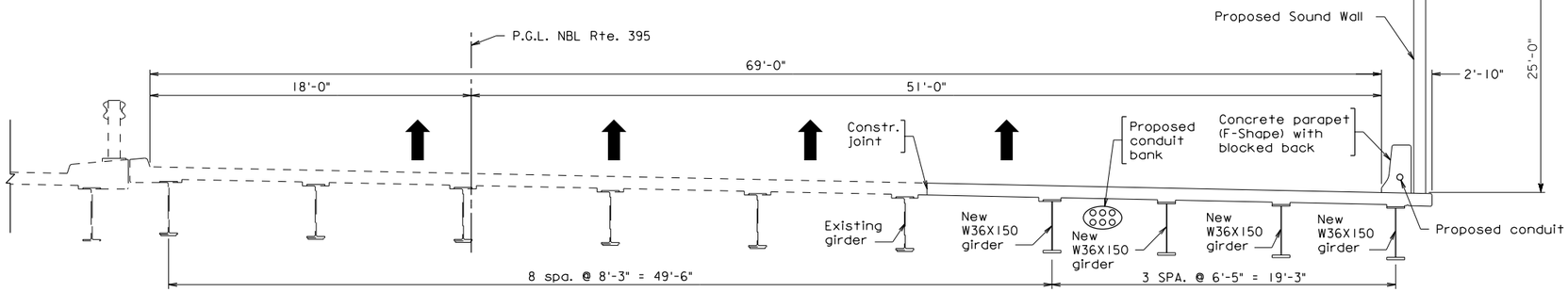

N.B.L. FINAL CONDITION

Scale: ¼" = 1'-0"

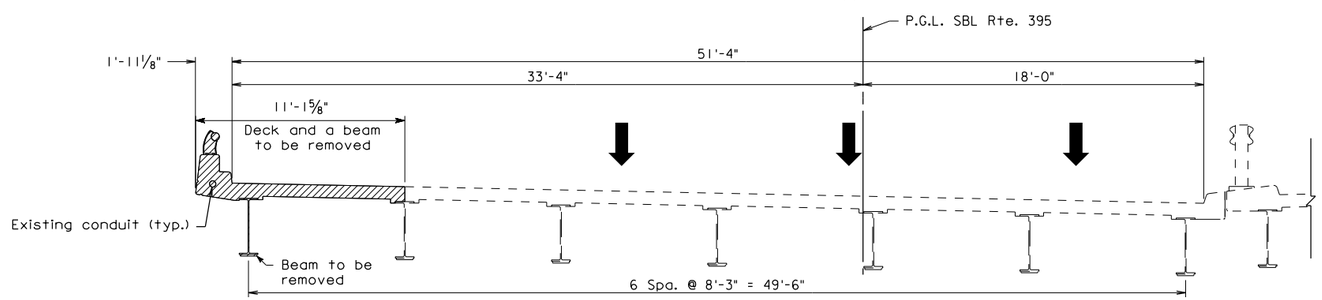

EXISTING S.B.L. TRANSVERSE SECTION

Scale: ¼" = 1'-0"

⊛ Provide temporary support during construction.

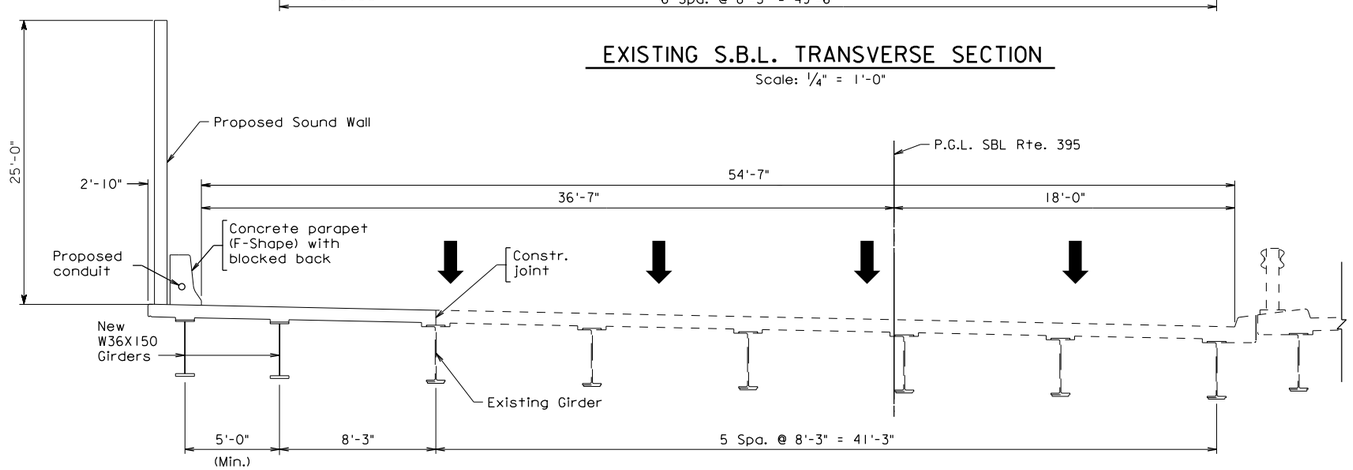

S.B.L. FINAL CONDITION

Scale: ¼" = 1'-0"

PARSONS

© 2012, Commonwealth of Virginia

No.	Description	Date

Revisions

COMMONWEALTH OF VIRGINIA
DEPARTMENT OF TRANSPORTATION

STRUCTURE AND BRIDGE DIVISION

SANGER AVENUE
DECK SECTIONS

Designed: ..... Drawn: ..... Checked:	Date	Plan No.	Sheet No.
	Dec. 2012		S09

TypSect_Sht1.dgn

STATE	FEDERAL AID ROUTE	FEDERAL AID PROJECT	STATE ROUTE	STATE PROJECT	SHEET NO.
VA.	—		395	0395-100-722, B685	S10

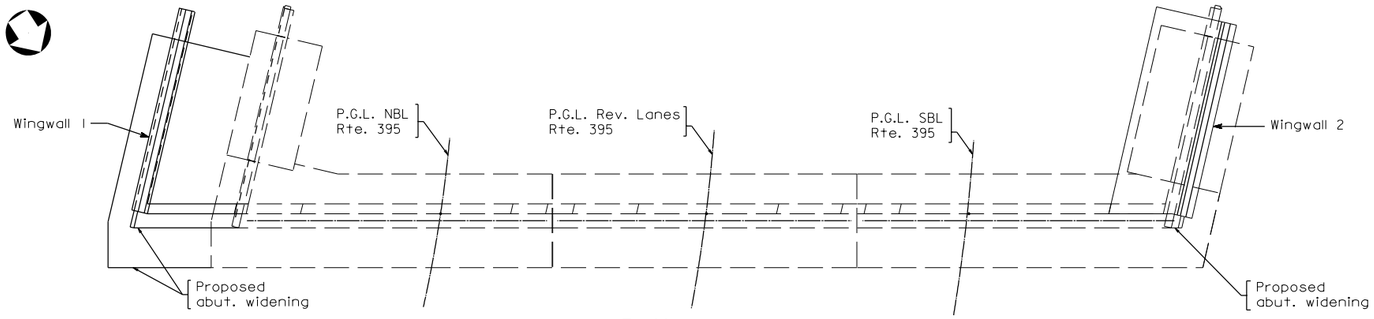

PLAN

See Sheet S11 for Detail

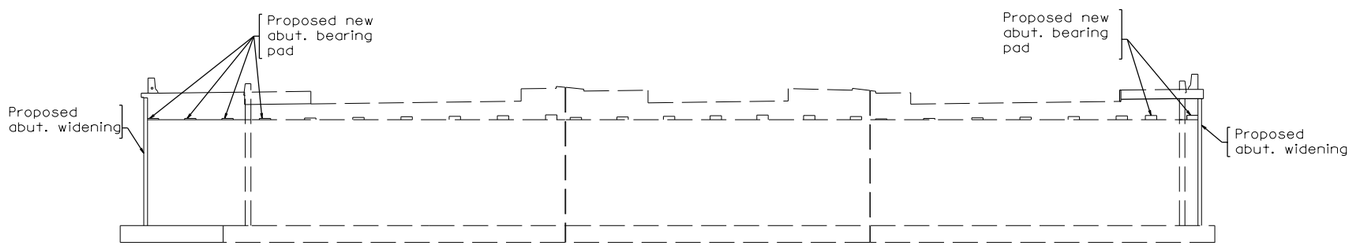

ELEVATION

SOUTH ABUTMENT

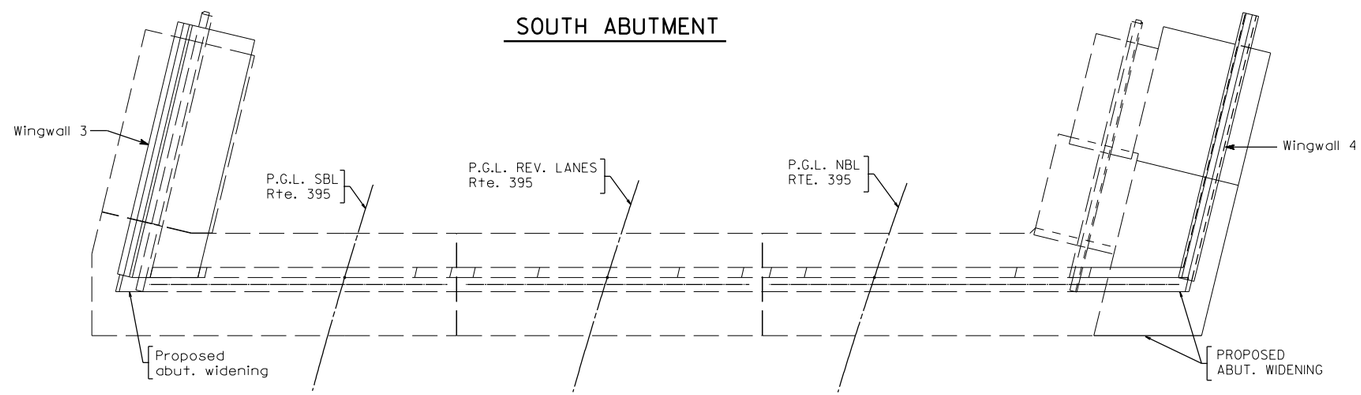

PLAN

See Sheet S12 for Detail

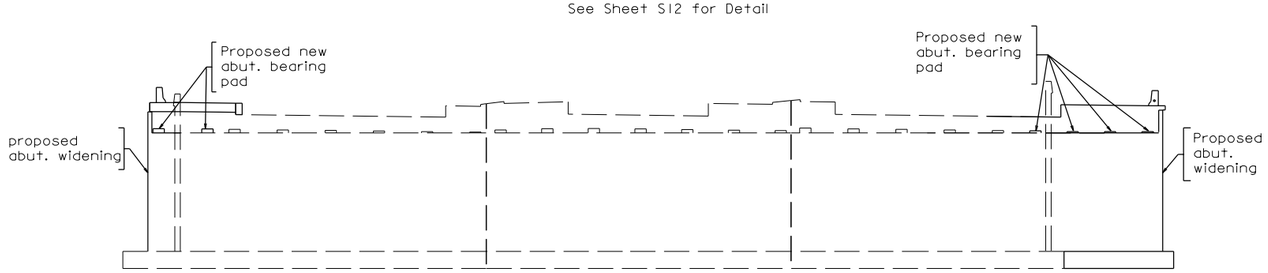

ELEVATION

NORTH ABUTMENT

PARSONS

© 2012, Commonwealth of Virginia

No.	Description	Date

Revisions

COMMONWEALTH OF VIRGINIA
DEPARTMENT OF TRANSPORTATION

STRUCTURE AND BRIDGE DIVISION

SANGER AVENUE
ABUTMENT
PLANS AND ELEVATIONS

Designed:	Date	Plan No.	Sheet No.
Drawn: ..... Checked:	Dec. 2012		S10

About_Sm3.dgn

STATE	FEDERAL AID ROUTE	FEDERAL AID PROJECT	STATE ROUTE	STATE PROJECT	SHEET NO.
VA.	—	-	-	-	S11

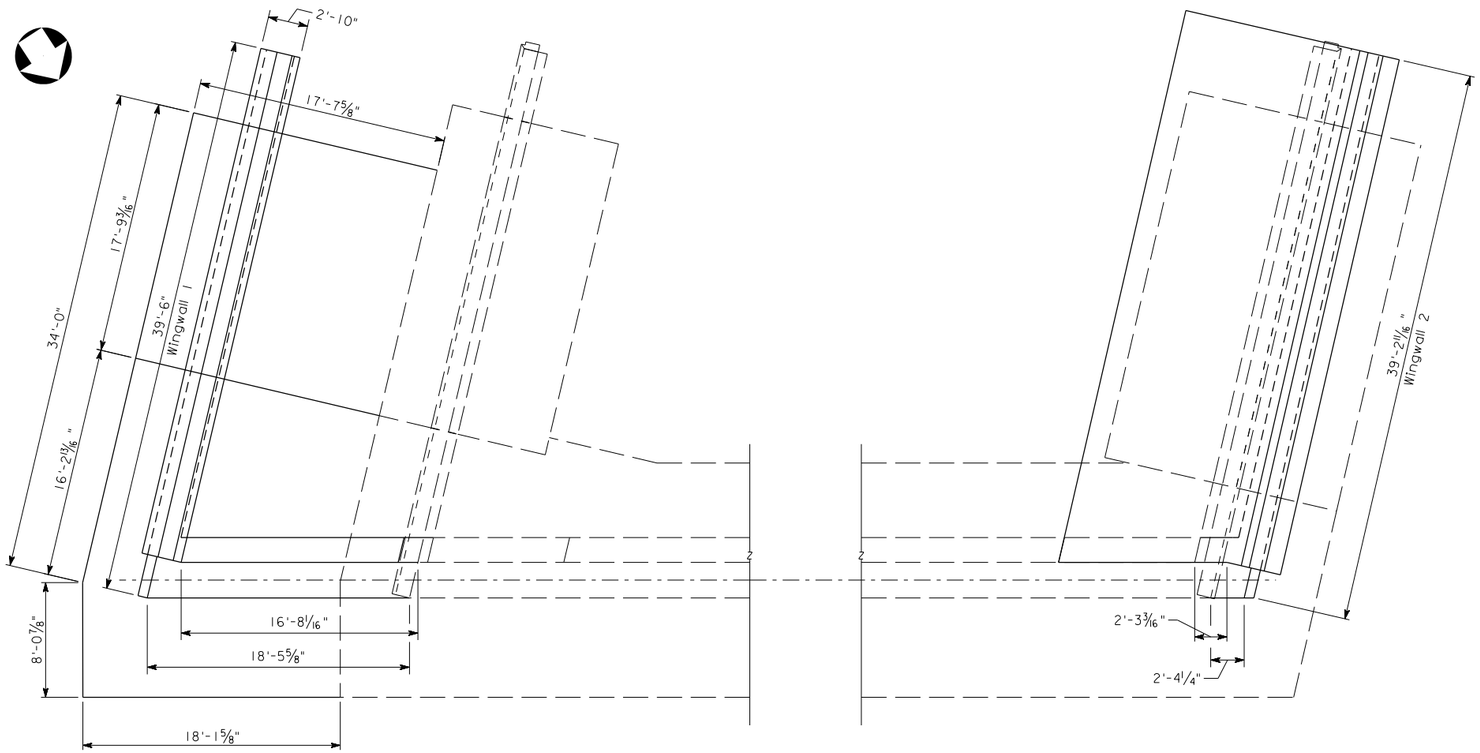

PLAN

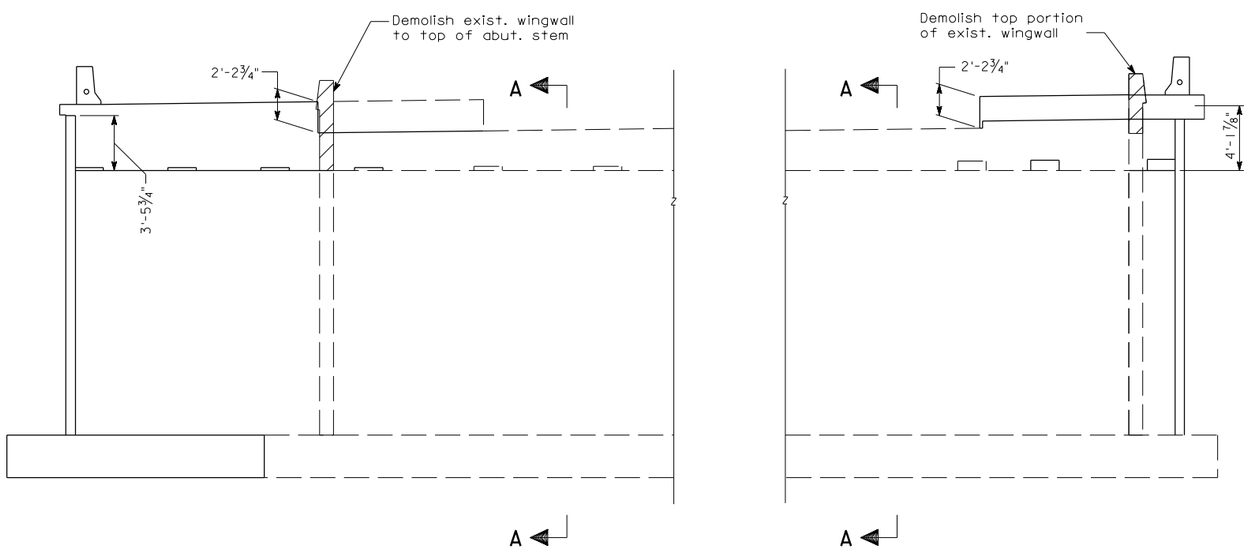

ELEVATION

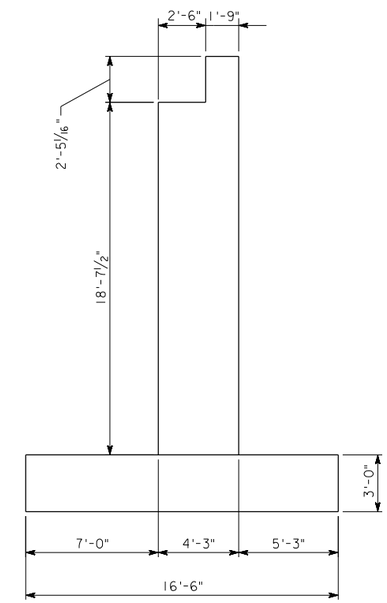

SECTION A-A

PARSONS

© 2012, Commonwealth of Virginia

No.	Description	Date

Revisions

COMMONWEALTH OF VIRGINIA
DEPARTMENT OF TRANSPORTATION

STRUCTURE AND BRIDGE DIVISION

SANGER AVENUE
SOUTH ABUTMENT

Designed: ..... / Drawn: ..... / Checked:	Date	Plan No.	Sheet No.
	-	-	S11

STATE	FEDERAL AID ROUTE	FEDERAL AID PROJECT	STATE ROUTE	STATE PROJECT	SHEET NO.
VA.	—	·	·	-	S12

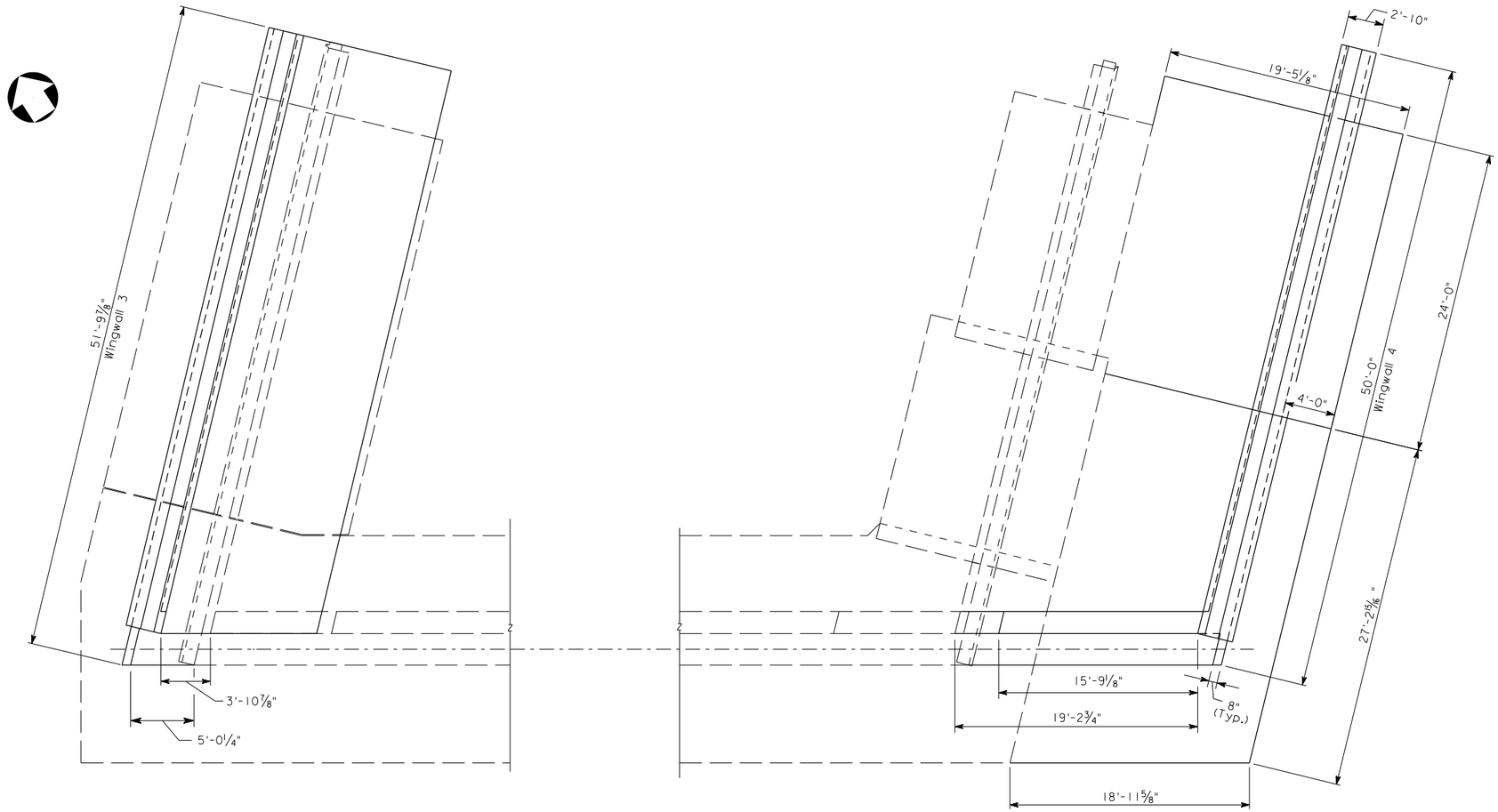

PLAN

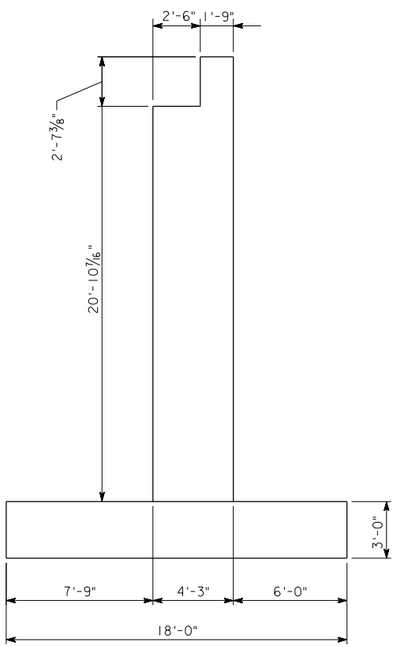

SECTION B-B

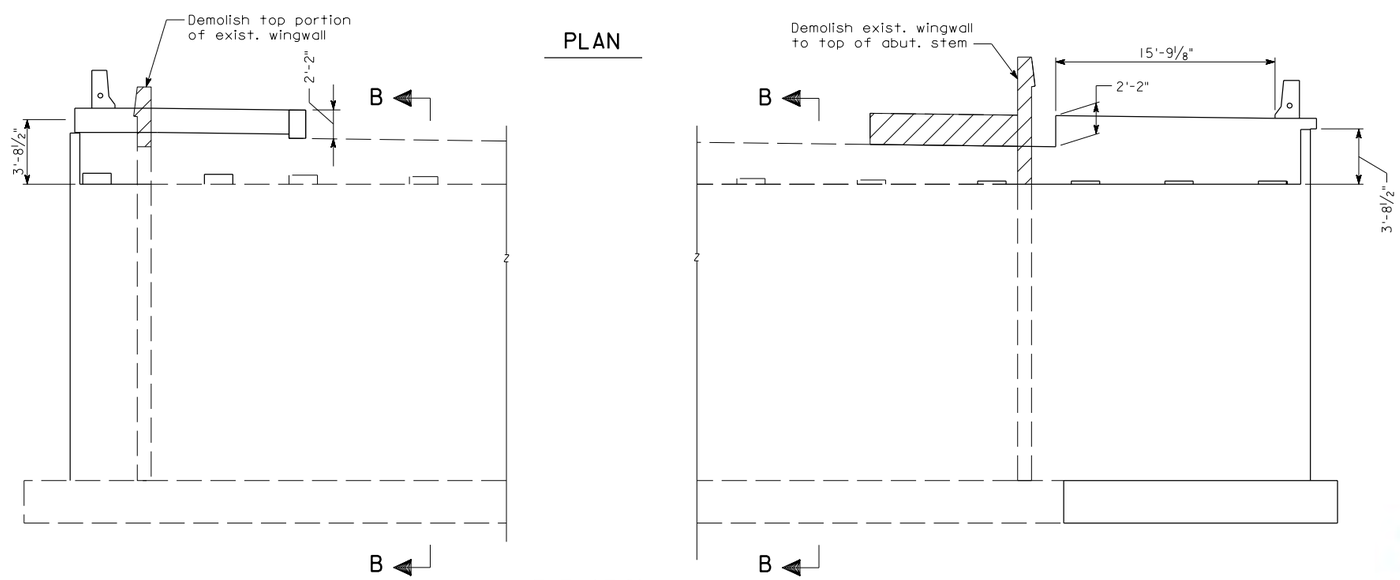

ELEVATION

PARSONS

© 2012, Commonwealth of Virginia

No.	Description	Date

Revisions

COMMONWEALTH OF VIRGINIA
DEPARTMENT OF TRANSPORTATION

STRUCTURE AND BRIDGE DIVISION

SANGER AVENUE
NORTH ABUTMENT

Designed: ..... / Drawn: ..... / Checked:	Date	Plan No.	Sheet No.
	·	·	S12

STATE	FEDERAL AID ROUTE	FEDERAL AID PROJECT	STATE ROUTE	STATE PROJECT	SHEET NO.
VA.	—	-	-	-	S13

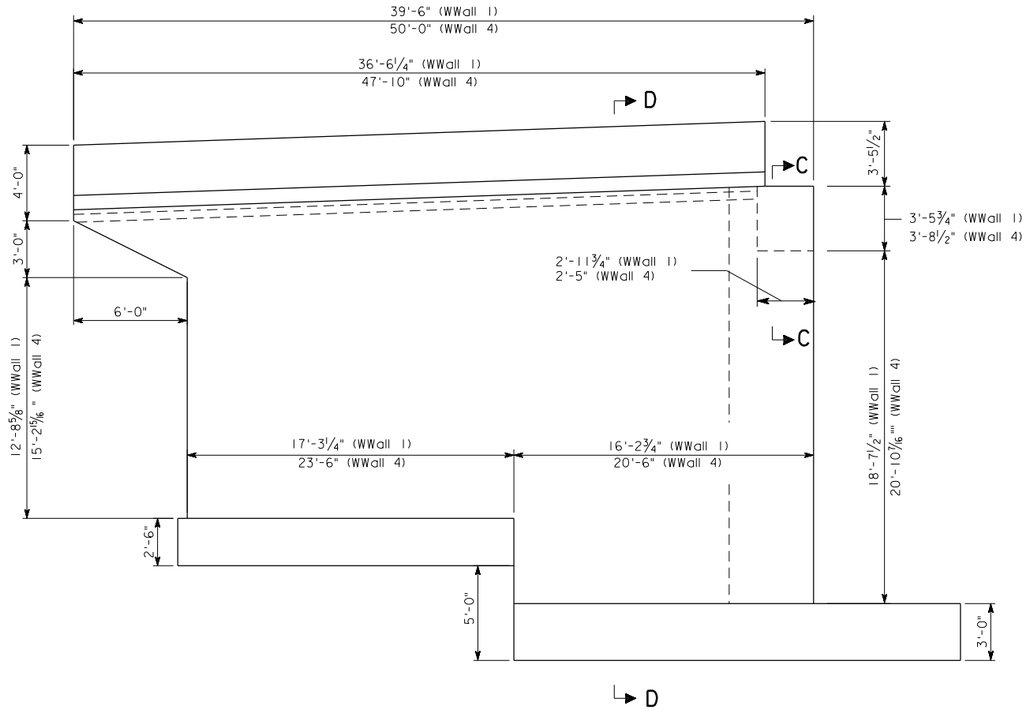

WINGWALLS 1 AND 4

Scale: ¼" = 1'-0"

(Wingwall 1 shown, Wingwall 4 opposite hand)
(New Wingwalls)

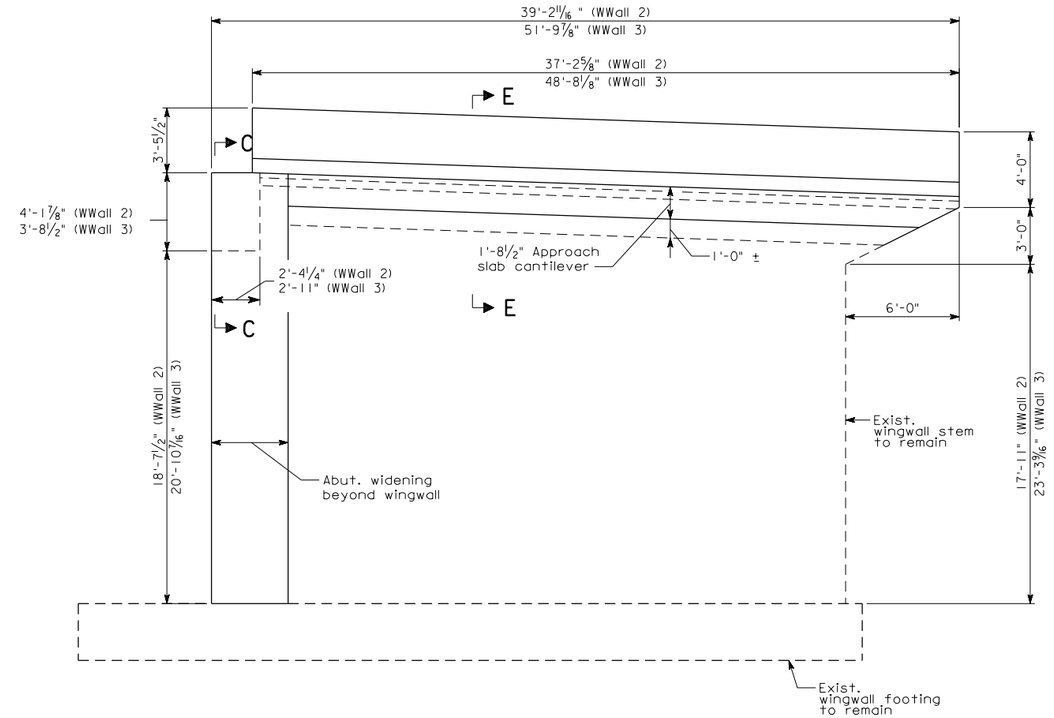

WINGWALLS 2 AND 3

Scale: ¼" = 1'-0"

(Wingwall 2 shown, Wingwall 3 opposite hand)
(Use exist. wingwall stem & footing)

PARSONS

© 2012, Commonwealth of Virginia

No.	Description	Date

Revisions

COMMONWEALTH OF VIRGINIA
DEPARTMENT OF TRANSPORTATION

STRUCTURE AND BRIDGE DIVISION

SANGER AVENUE
WINGWALL ELEVATIONS

Designed: ..... Drawn: ..... Checked:	Date	Plan No.	Sheet No.
	-	-	S13

STATE	FEDERAL AID ROUTE	FEDERAL AID PROJECT	STATE ROUTE	STATE PROJECT	SHEET NO.
VA.	—	·	·	–	S14

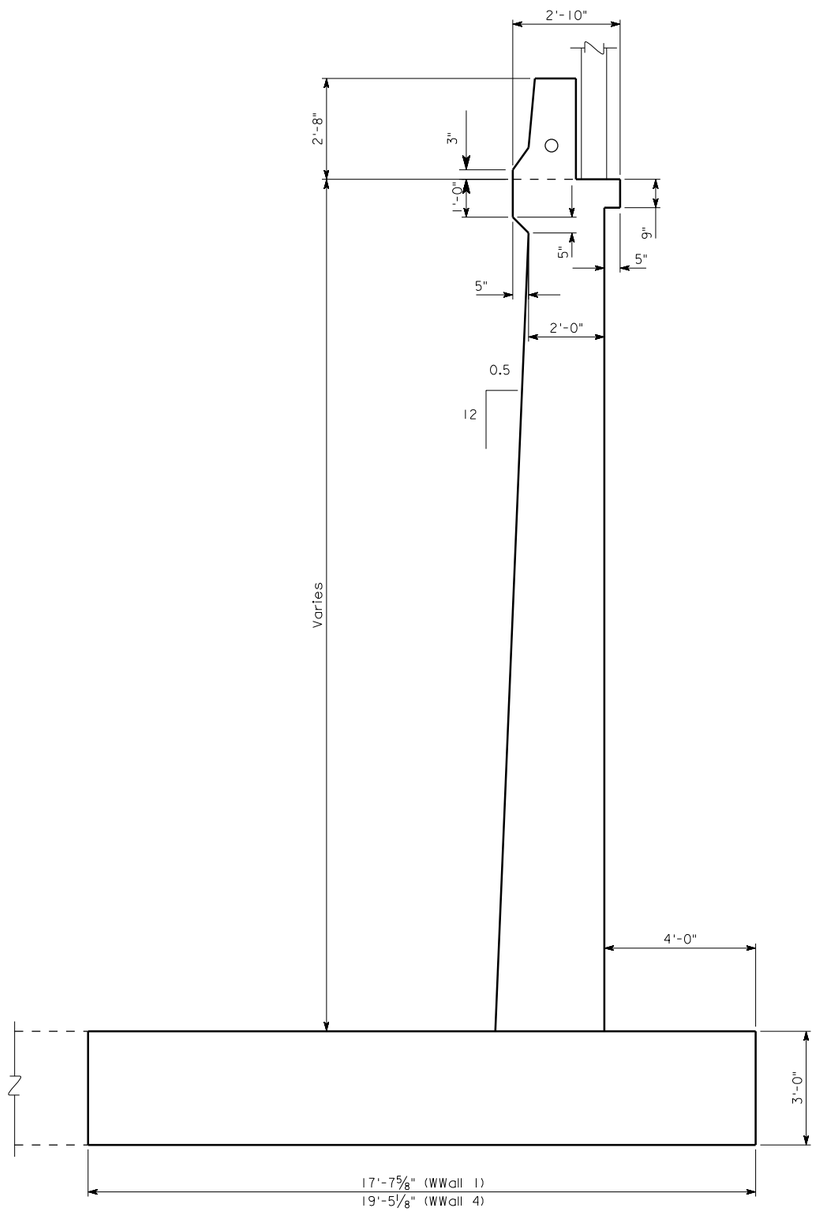

SECTION D-D

Scale: ½" = 1'-0"

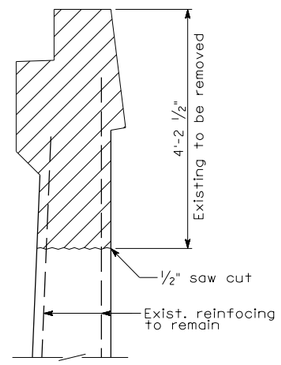

SECTION E-E - EXISTING

Scale: ¾" = 1'-0"

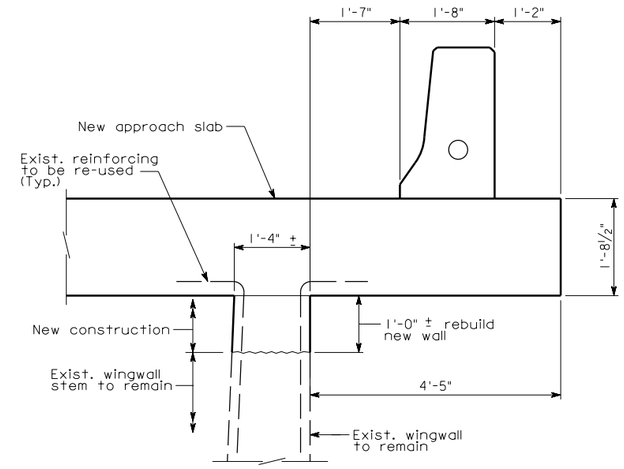

SECTION E-E - PROPOSED

Scale: ¾" = 1'-0"

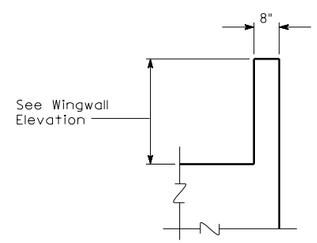

SECTION C-C

Scale: ½" = 1'-0"

PARSONS

© 2012, Commonwealth of Virginia

No.	Description	Date

Revisions

COMMONWEALTH OF VIRGINIA
DEPARTMENT OF TRANSPORTATION

STRUCTURE AND BRIDGE DIVISION

SANGER AVENUE
WINGWALL SECTIONS

Designed: ..... / Drawn: ..... / Checked:	Date	Plan No.	Sheet No.
	-	·	S14

STATE	FEDERAL AID ROUTE	FEDERAL AID PROJECT	STATE ROUTE	STATE PROJECT	SHEET NO.
VA.	—		369	0395-100-722, B686	S15

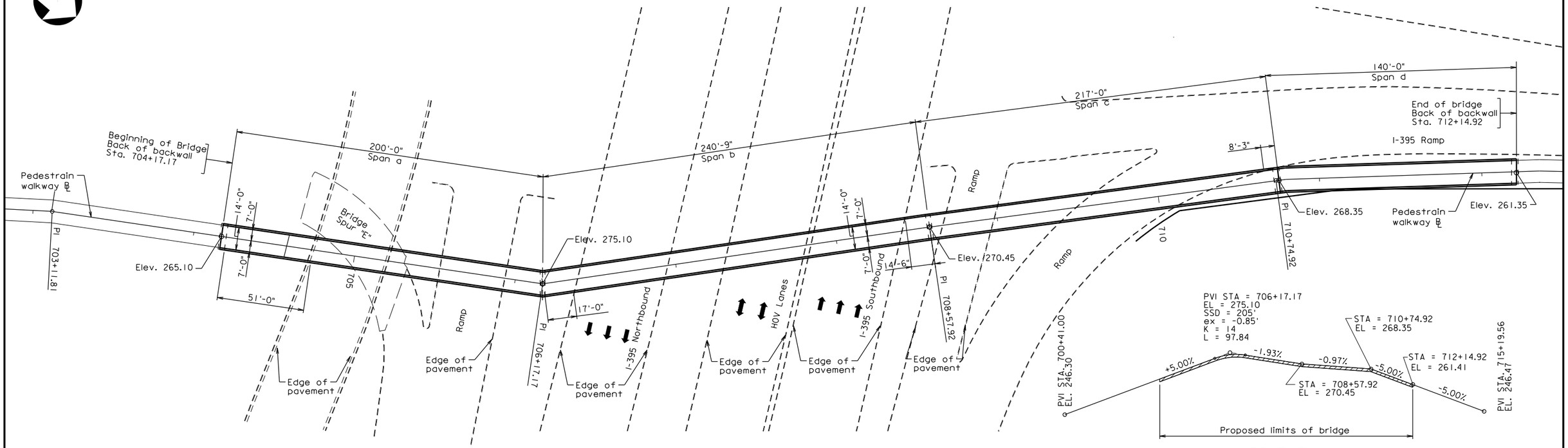

PLAN

PROFILE

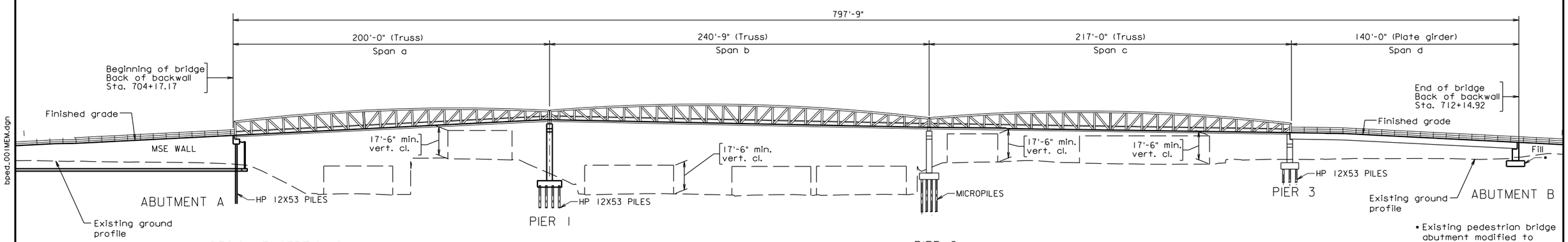

ELEVATION
DEVELOPED ALONG CENTER LINE

• Existing pedestrian bridge abutment modified to supporrt steel plate girders.

DESIGN EXCEPTION(S):

None

GENERAL NOTES:

Width: 14'-0" face-to-face of curb.

Span layout: 200'-0" - 240'-9" - 217'-0" - 140'-0"

Specifications:

Capacity: 85 psf pedestrian loading with no reduction allowed.

Construction: Virginia Department of Transportation Road and Bridge Specifications, 2007.

Design: AASHTO LRFD Bridge Design Specifications, 5th Edition, 2010; 2010 Interim Specifications; and VDOT Modifications.

Standards: Virginia Department of Transportation Road and Bridge Standards, 2008.

These plans are incomplete unless accompanied by the Supplemental Specifications and Special Provisions included in the contract documents.

PRELIMINARY PLANS

THESE PLANS NOT TO BE USED FOR CONSTRUCTION OF BRIDGE

PARSONS

© 2012, Commonwealth of Virginia

No.	Description	Date

Revisions

COMMONWEALTH OF VIRGINIA
DEPARTMENT OF TRANSPORTATION

STRUCTURE AND BRIDGE DIVISION

PROPOSED PEDESTRIAN BRIDGE ON SEMINARY ROAD

Designed: ..... Drawn: ..... Checked:	Date	Plan No.	Sheet No.
	DEC., 2012		S15

bped_001MEM.dgn

STATE	FEDERAL AID ROUTE	FEDERAL AID PROJECT	STATE ROUTE	STATE PROJECT	SHEET NO.
VA.	—	-	395	0395-100-722, B686	S16

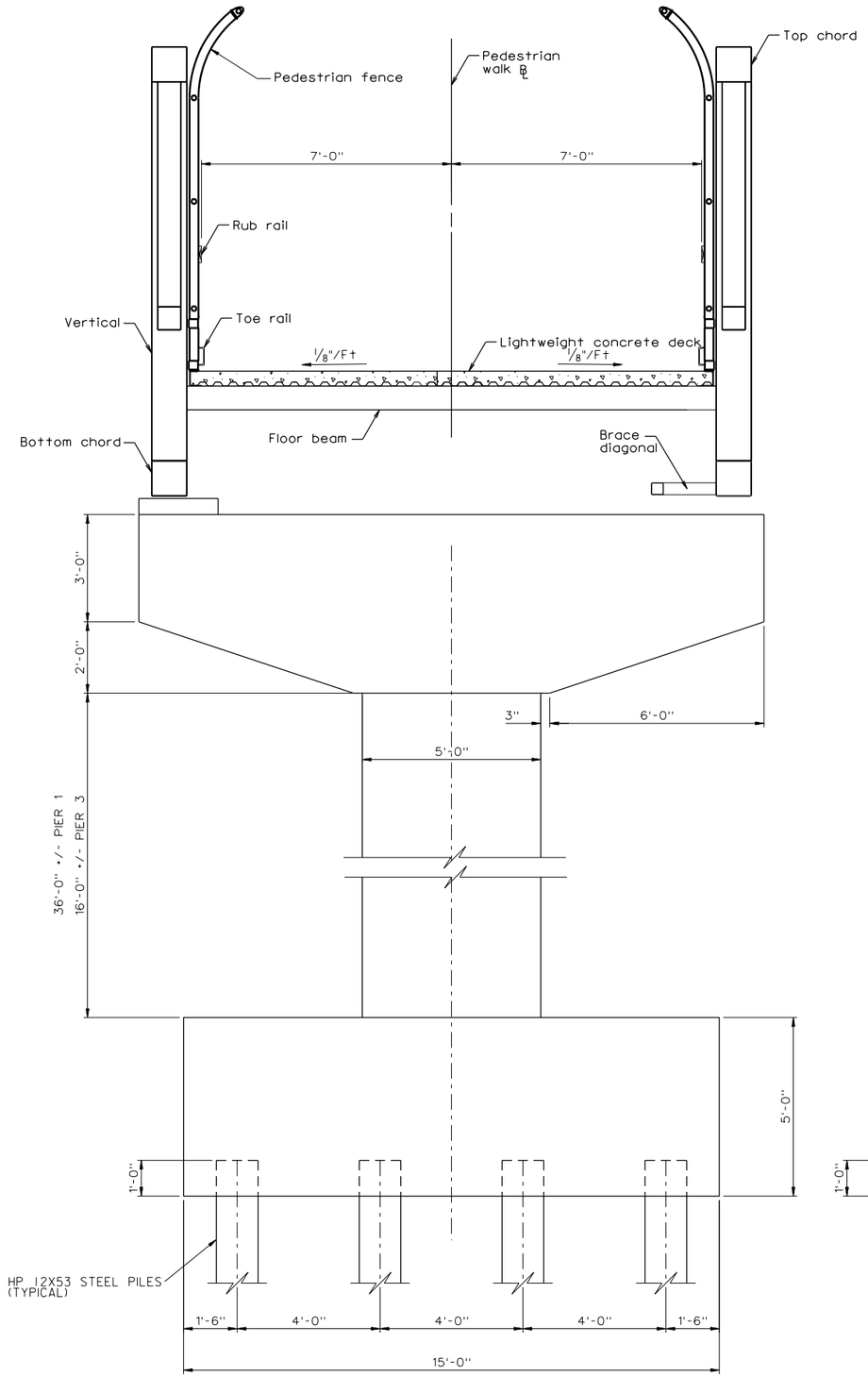

SECTION

PIER 1 SHOWN PIER 3 SIMILAR

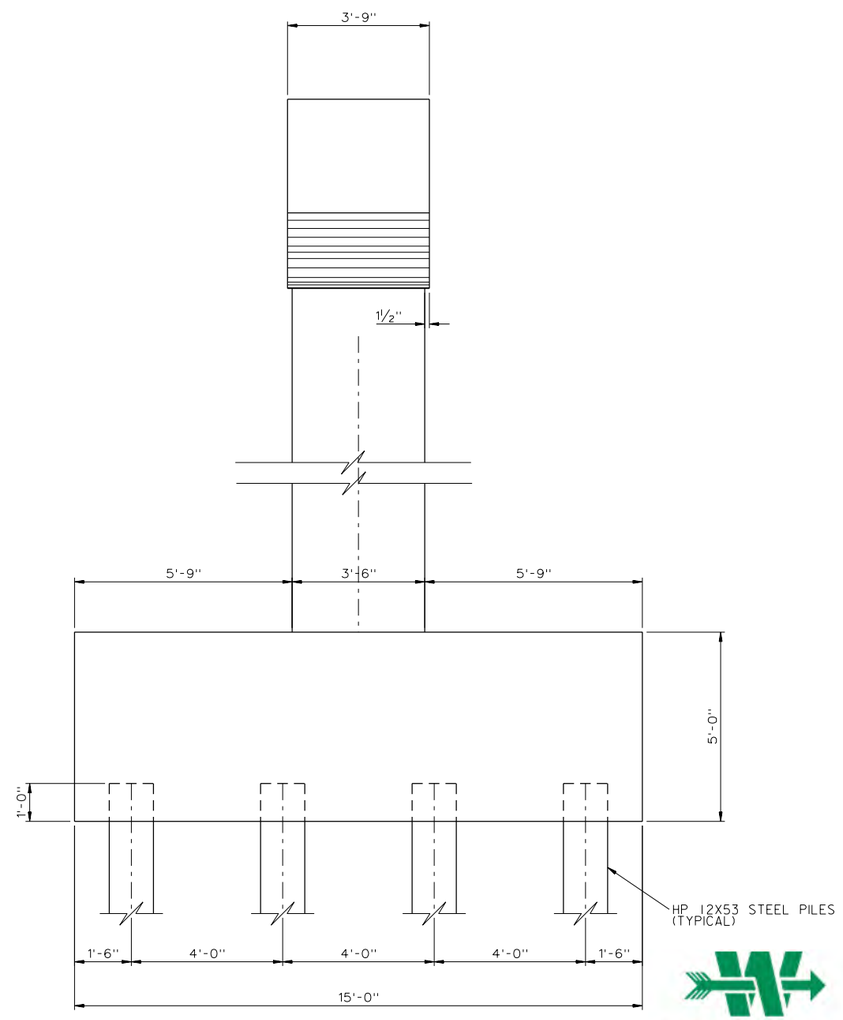

END ELEVATION

PIER 1 SHOWN PIER 3 SIMILAR

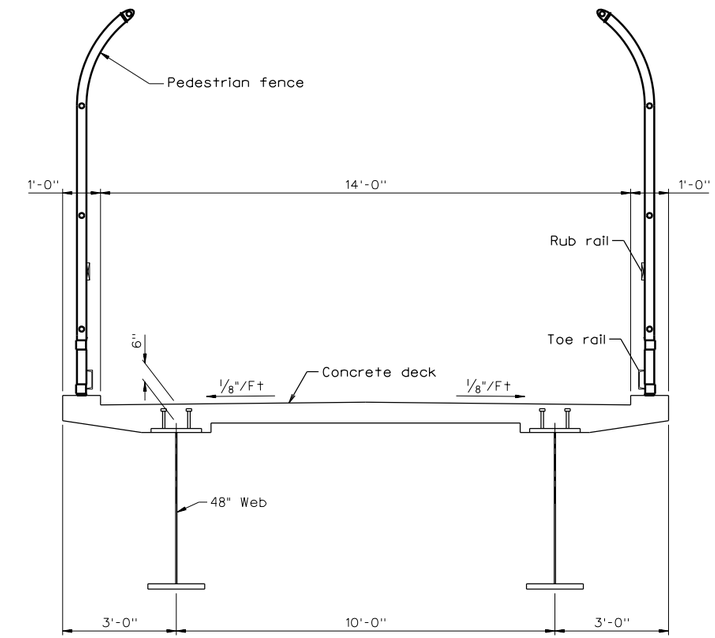

NOTE: SEE SHEET S17 FOR FOOTING DETAILS

PARSONS

© 2012, Commonwealth of Virginia

No.	Description	Date
	Revisions	

COMMONWEALTH OF VIRGINIA
DEPARTMENT OF TRANSPORTATION

STRUCTURE AND BRIDGE DIVISION

SECTION AND DETAILS

Designed: ..... Drawn: ..... Checked:	Date	Plan No.	Sheet No.
	DEC. 2012		S16

bped_002MEM.dgn

STATE	FEDERAL AID ROUTE	FEDERAL AID PROJECT	STATE ROUTE	STATE PROJECT	SHEET NO.
VA.	—	-	395	0395-100-722, B686	S17

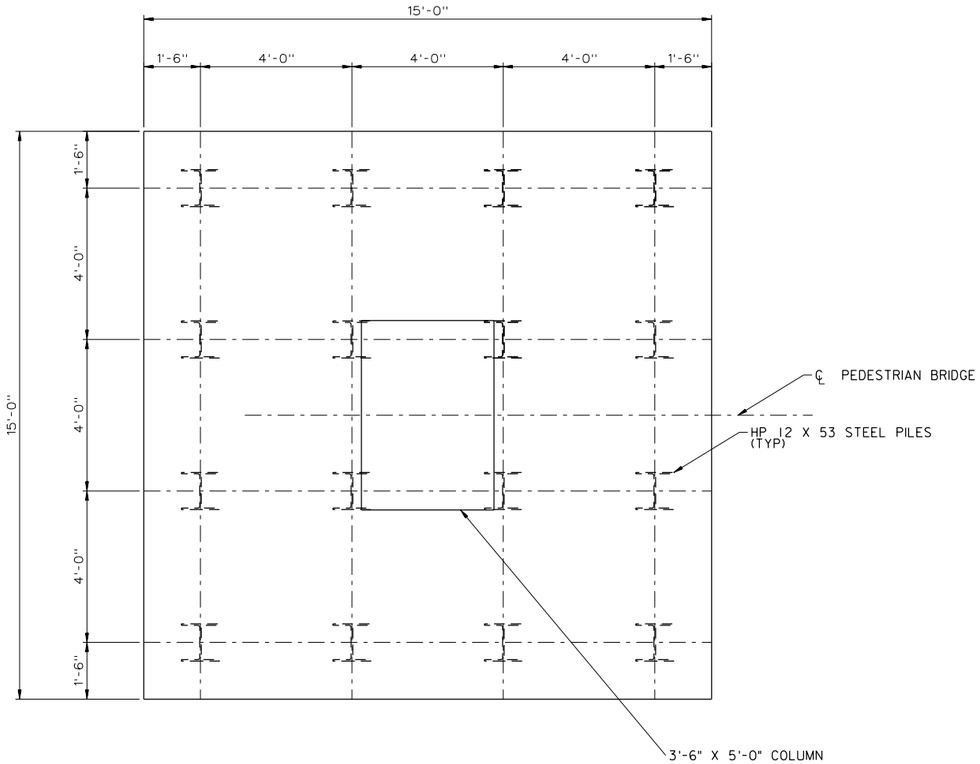

FOOTING PLAN PIER 1

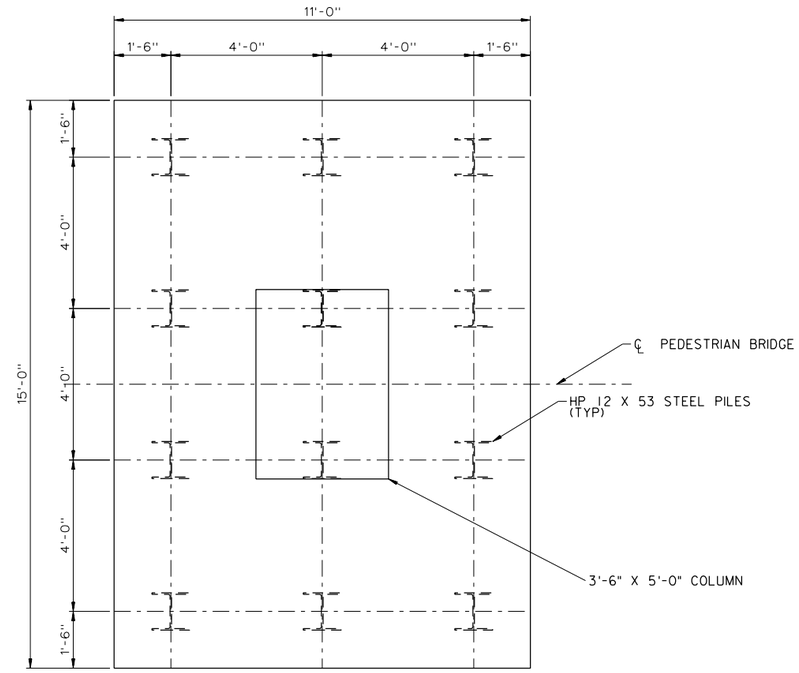

FOOTING PLAN PIER 3

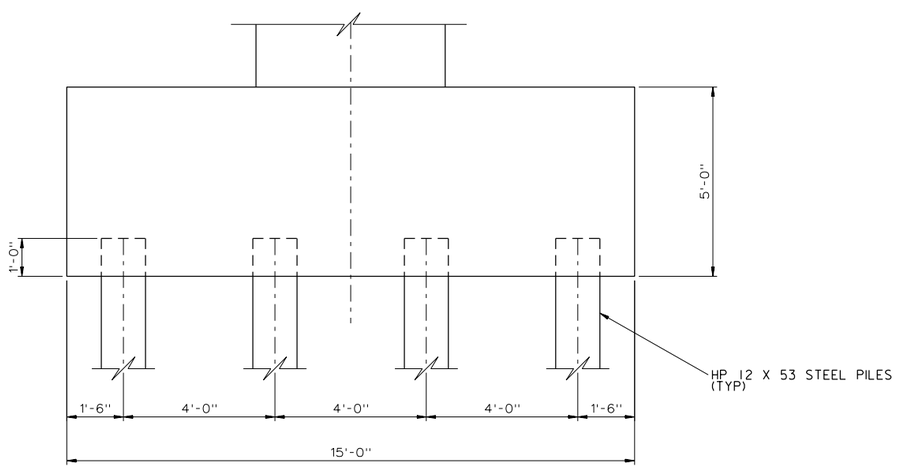

FOOTING SECTION PIER 1

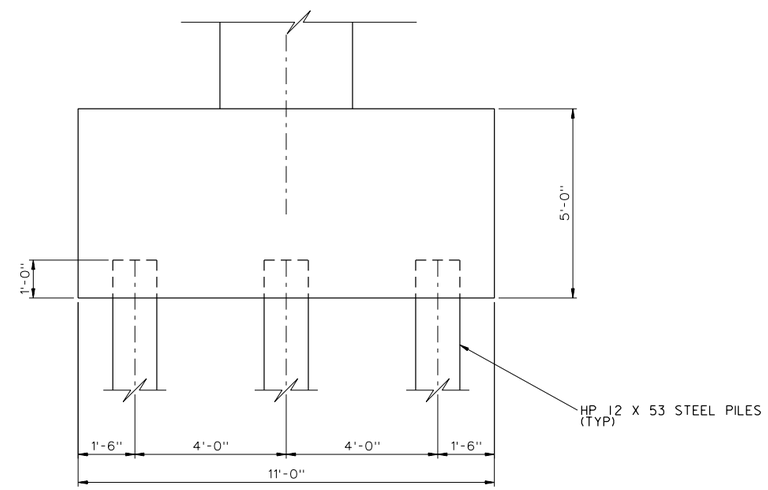

FOOTING SECTION PIER 3

PARSONS

© 2012, Commonwealth of Virginia

No.	Description	Date
	Revisions	

COMMONWEALTH OF VIRGINIA
DEPARTMENT OF TRANSPORTATION

STRUCTURE AND BRIDGE DIVISION

FOOTING DETAILS PIERS 1 & 3

Designed: ..... Drawn: ..... Checked:	Date	Plan No.	Sheet No.
	DEC, 2012		S17

bped_003MEM.dgn

STATE	FEDERAL AID ROUTE	FEDERAL AID PROJECT	STATE ROUTE	STATE PROJECT	SHEET NO.
VA.	—	·	395	0395-100-722, B686	S18

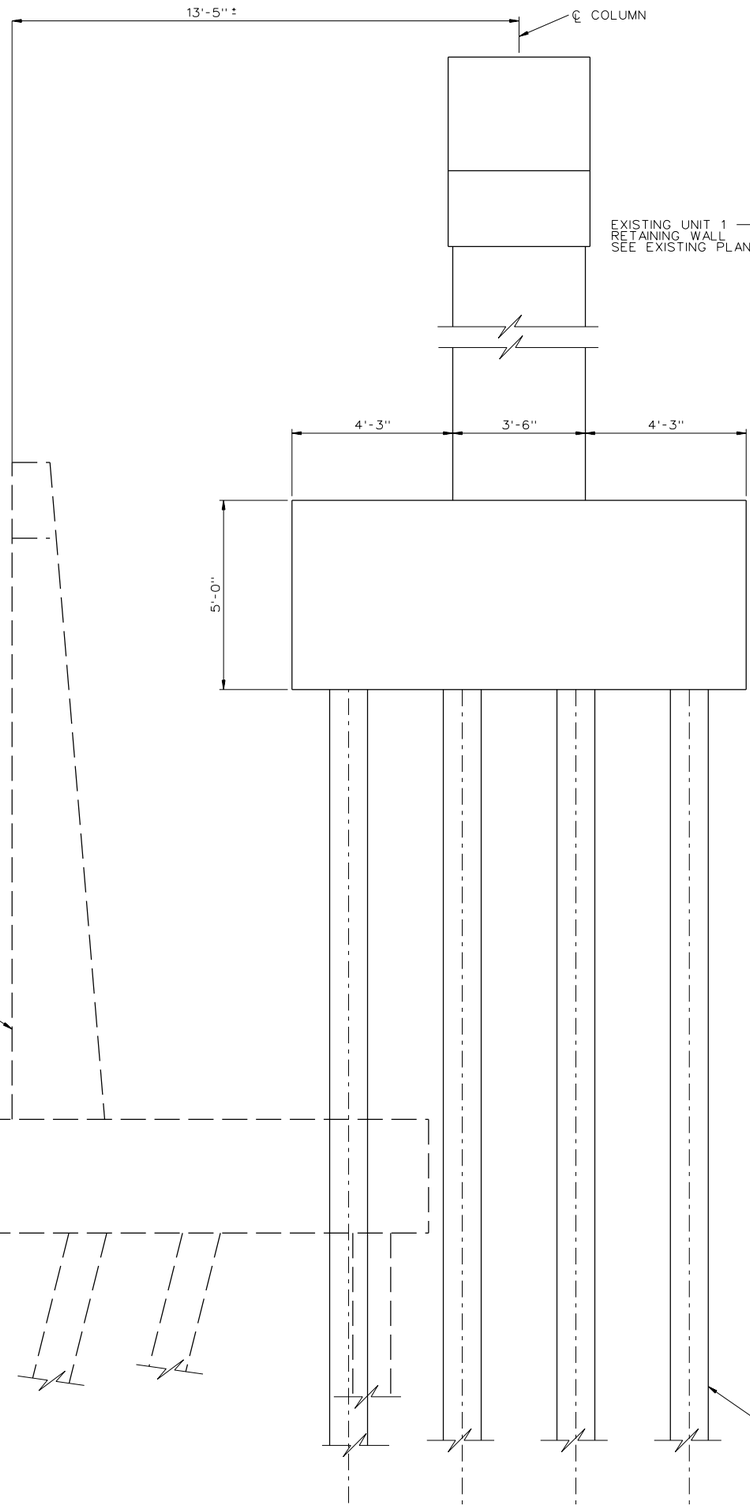

END ELEVATION

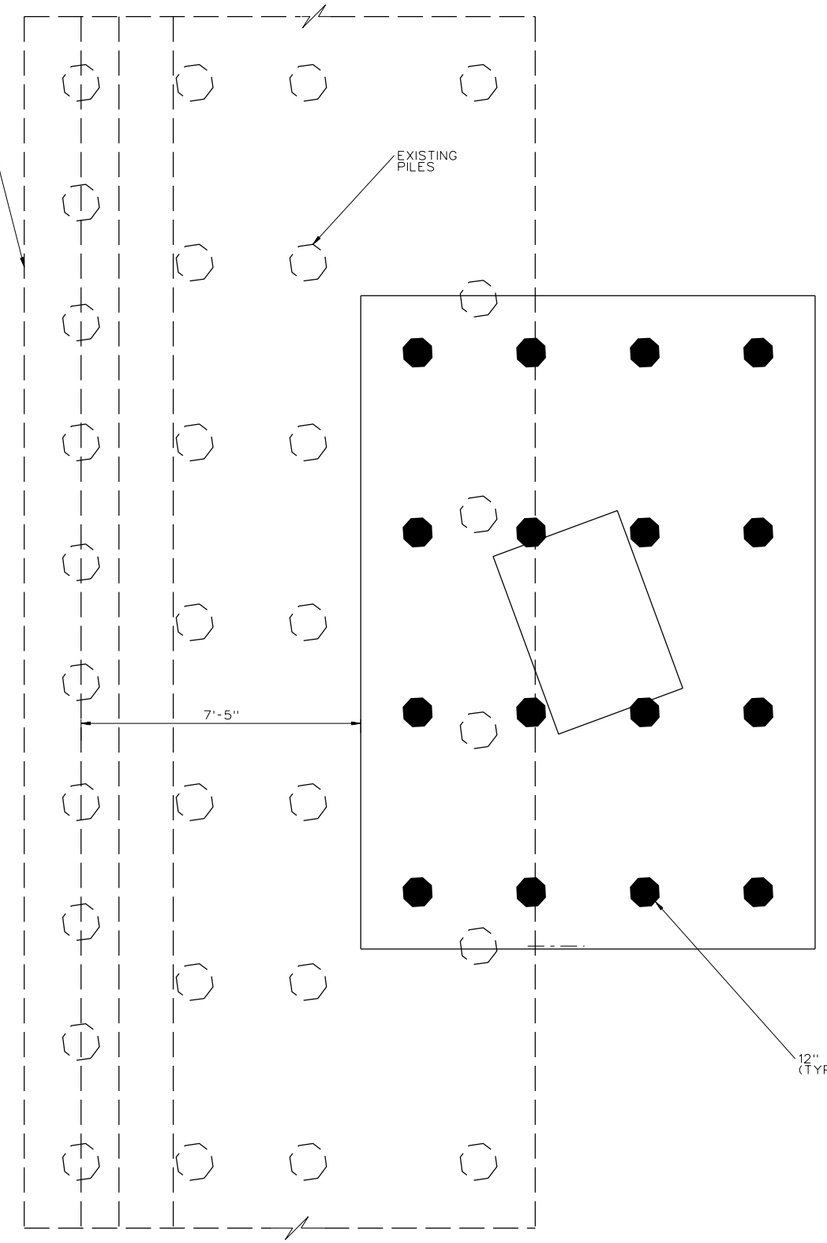

PLAN VIEW

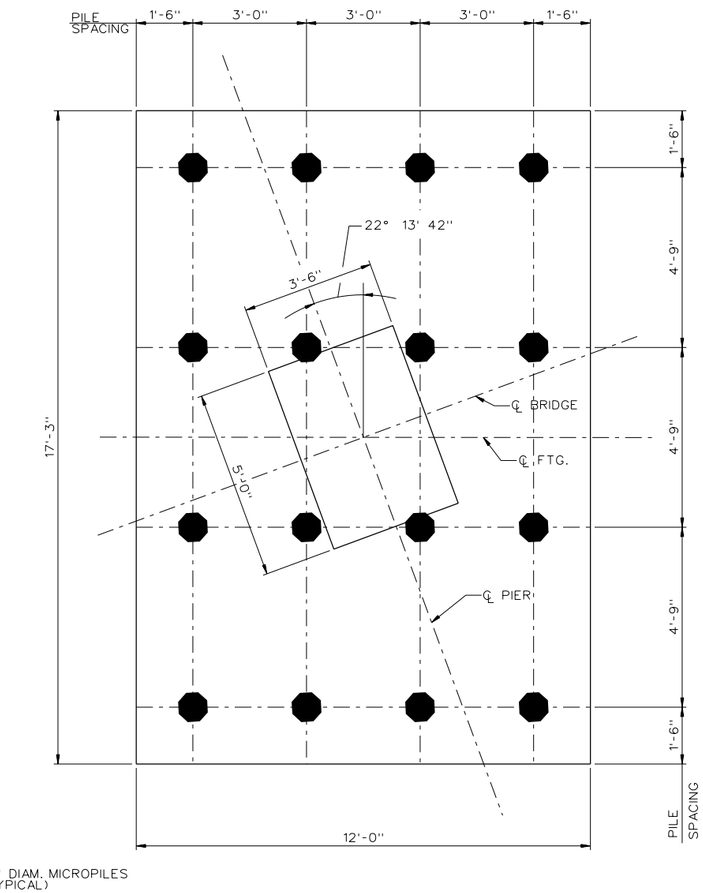

PFROPOSED FOOTING PLAN

bped.004MEM.dgn

PARSONS

© 2012, Commonwealth of Virginia

No.	Description	Date

Revisions

COMMONWEALTH OF VIRGINIA
DEPARTMENT OF TRANSPORTATION

STRUCTURE AND BRIDGE DIVISION

PEDESTRIAN BRIDGE PIER 2 DETAILS

Designed:	Date	Plan No.	Sheet No.
Drawn:	DEC. -2012		S18
Checked:			

STATE	FEDERAL AID ROUTE	FEDERAL AID PROJECT	STATE ROUTE	STATE PROJECT	SHEET NO.
VA.	—		395	0395-100-722, B686	S19

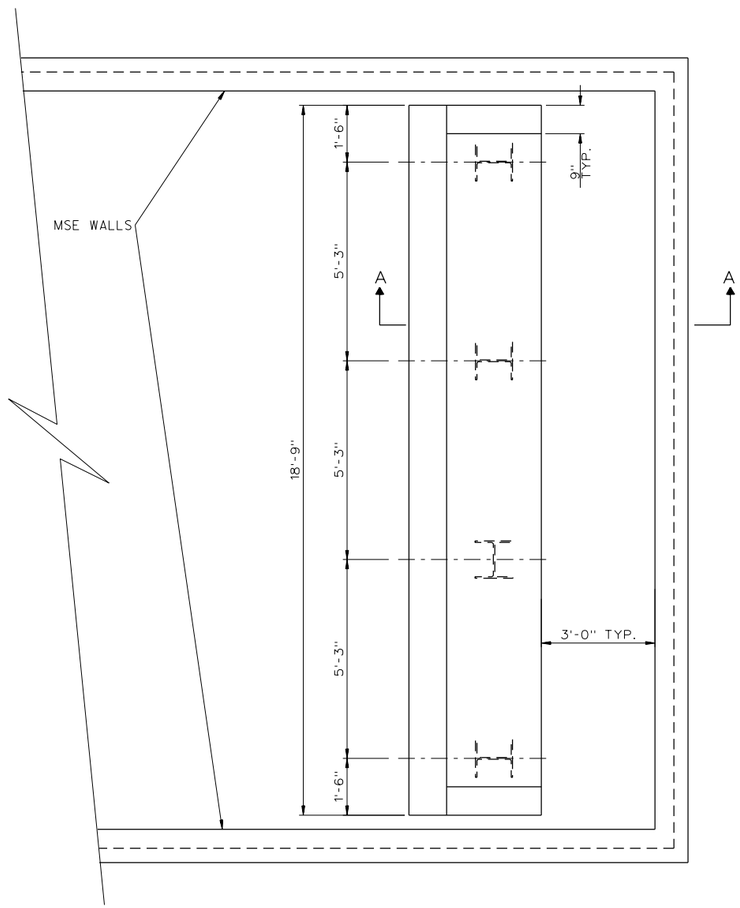

PLAN VIEW ABUTMENT NO. 1

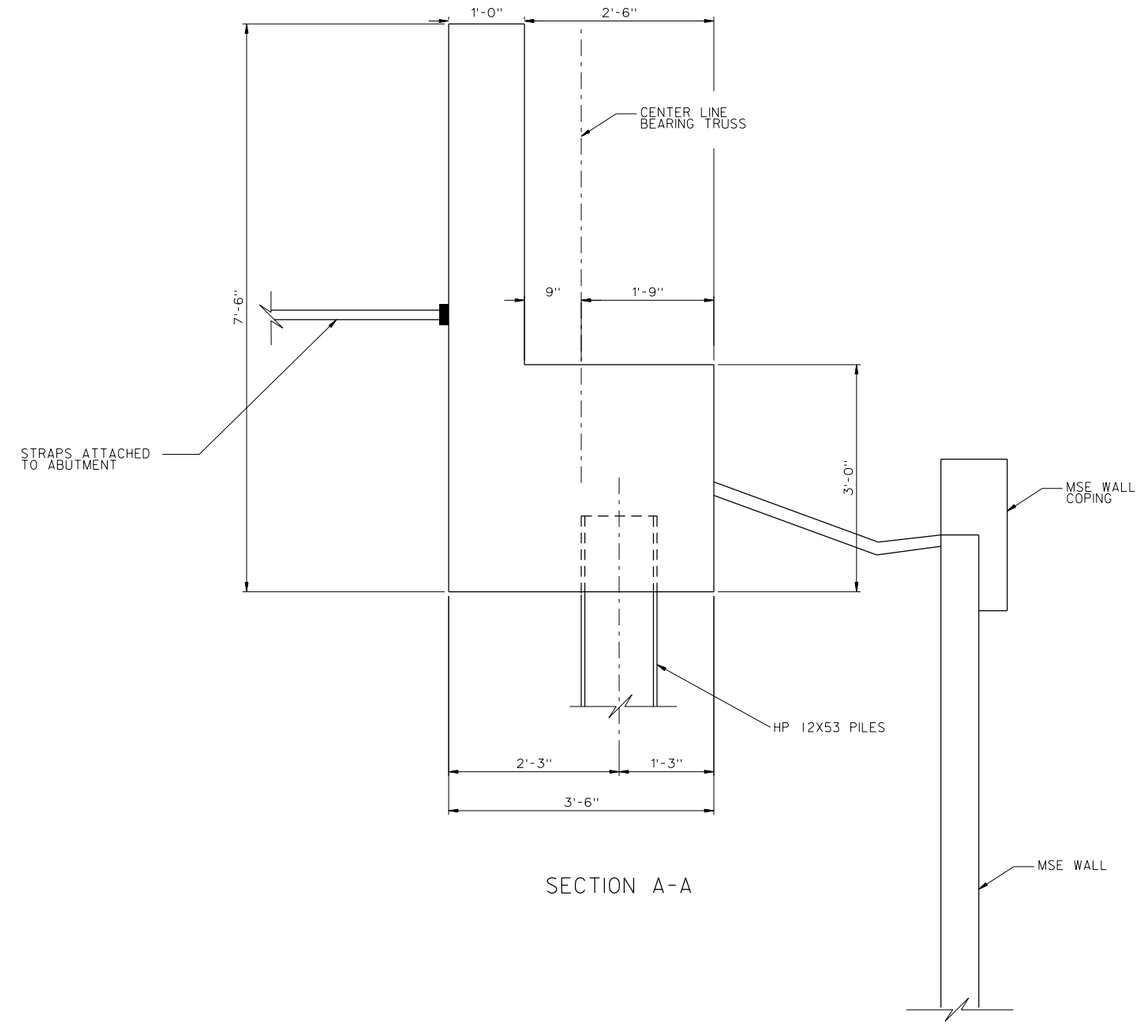

SECTION A-A

bped_005MEM.dgn

PARSONS

© 2012, Commonwealth of Virginia

No.	Description	Date
	Revisions	

COMMONWEALTH OF VIRGINIA
DEPARTMENT OF TRANSPORTATION

STRUCTURE AND BRIDGE DIVISION

ABUTMENT NO. 1 DETAILS

Designed: ..... Drawn: ..... Checked:	Date	Plan No.	Sheet No.
	DEC. 2012		S19

STATE	FEDERAL AID ROUTE	FEDERAL AID PROJECT	STATE ROUTE	STATE PROJECT	SHEET NO.
VA.	—	.	395	0395-100-722, B685	S20

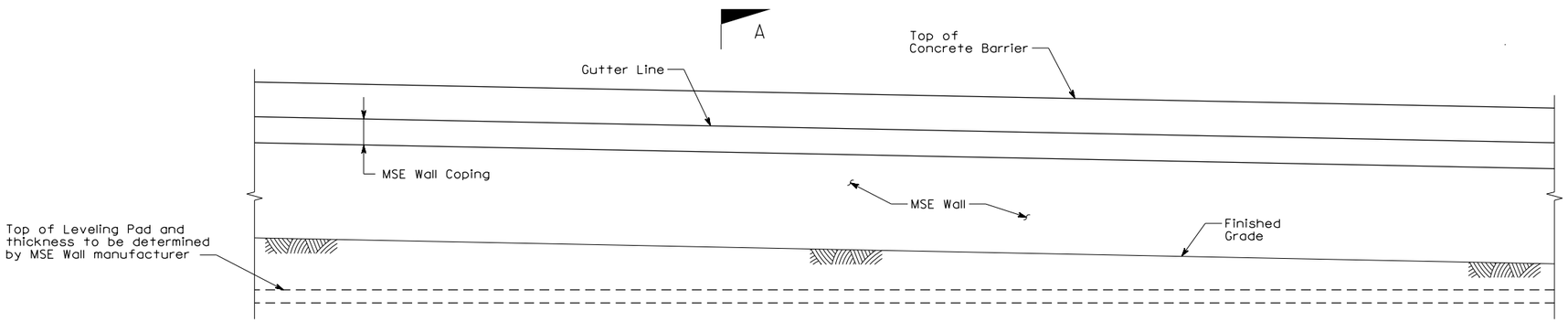

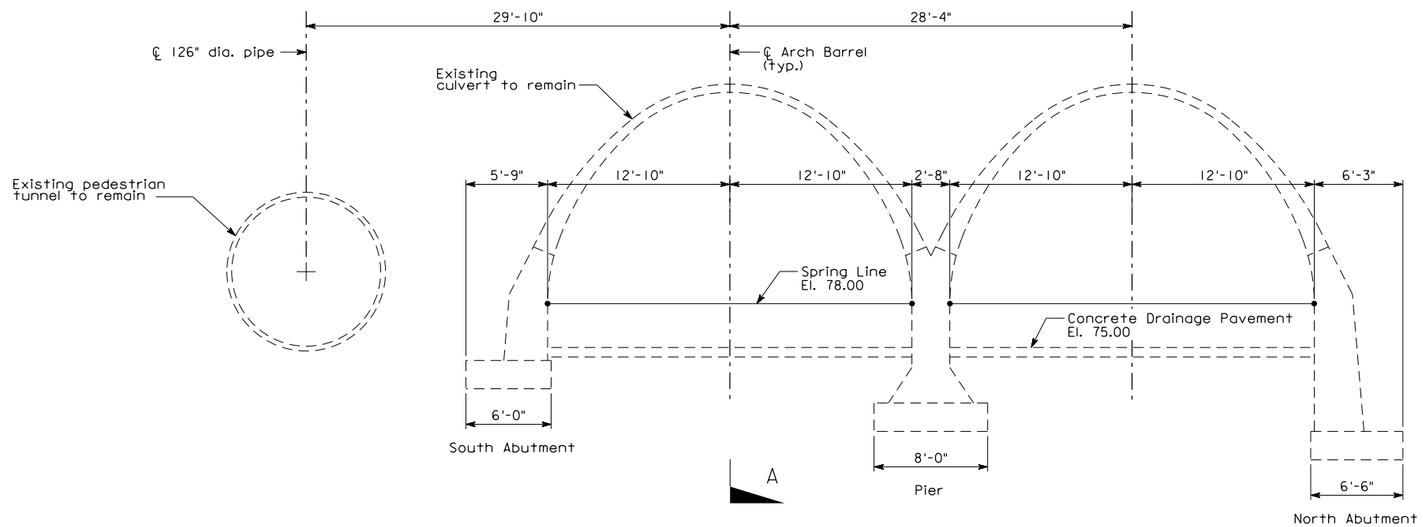

WALL ELEVATION

Scale: 3/16" = 1'-0"

Note: Sound Barrier not shown.

Note:
For Section A-A, see Sheet No. S21.

PARSONS

© 2012, Commonwealth of Virginia

No.	Description	Date
	Revisions	

COMMONWEALTH OF VIRGINIA
DEPARTMENT OF TRANSPORTATION

STRUCTURE AND BRIDGE DIVISION

RETAINING WALL
OVER HOLMES RUN CULVERT
AND PEDESTRIAN TUNNEL

Designed: ..... Drawn: ..... Checked:	Date	Plan No.	Sheet No.
	Dec. 2012	.	S20

WallElevation.dgn

STATE	FEDERAL AID ROUTE	FEDERAL AID PROJECT	STATE ROUTE	STATE PROJECT	SHEET NO.
VA.	—	·	369	0395-100-722, B686	S21

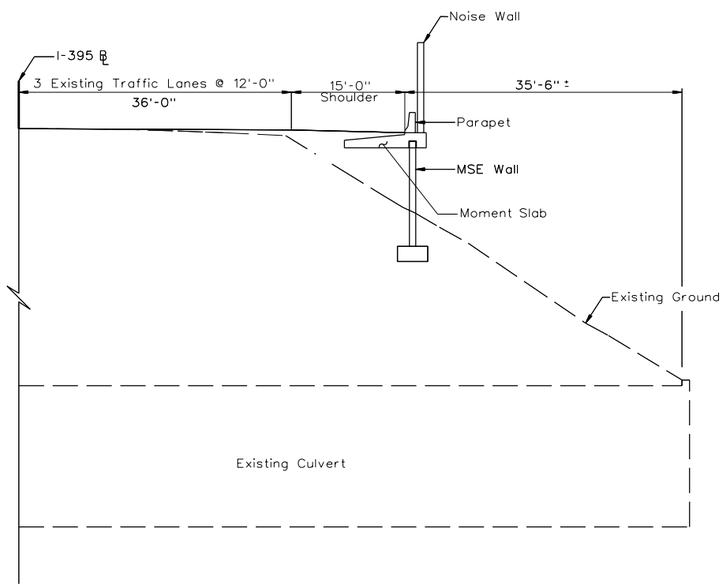

SECTION A-A

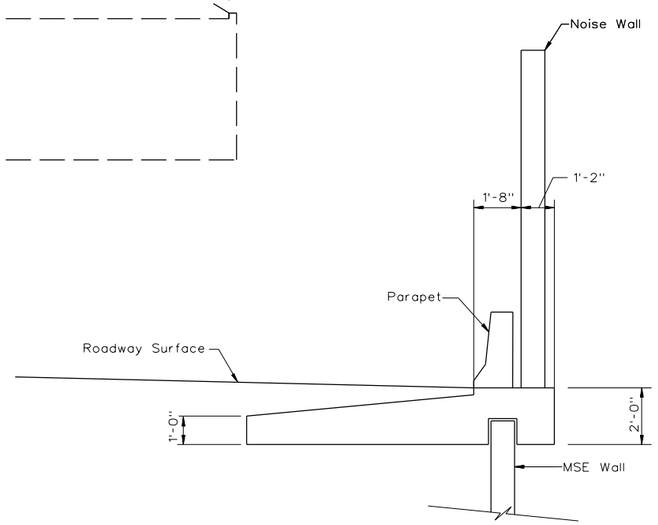

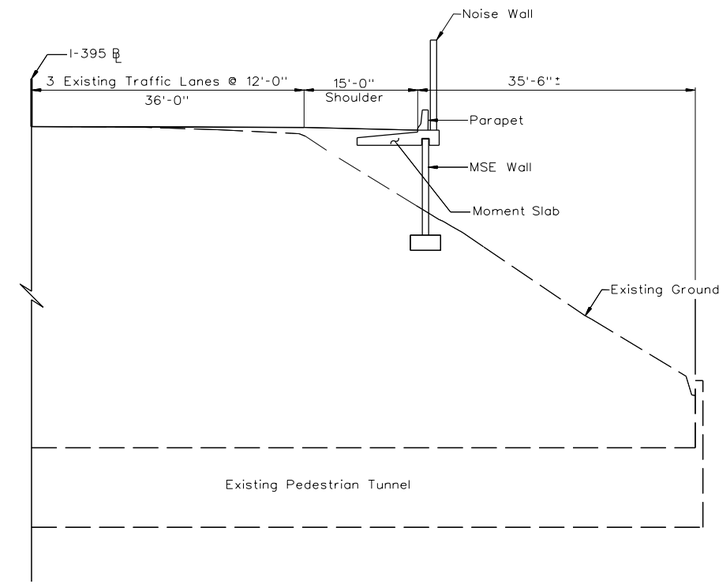

SECTION

THRU EXISITNG PEDESTRIAN TUNNEL

Notes:

1. See Sheet No. S20 for Elevation View.

PARSONS

© 2012, Commonwealth of Virginia

No.	Description	Date
	Revisions	

COMMONWEALTH OF VIRGINIA
DEPARTMENT OF TRANSPORTATION

STRUCTURE AND BRIDGE DIVISION

RETAINING WALL
OVER HOLMES RUN CULVERT
AND PEDESTRIAN TUNNEL

Designed: ..... / Drawn: ..... / Checked:	Date	Plan No.	Sheet No.
	Dec. 2012		S21