APPENDIX A(1)

VDOT Complete Streets: Bicycle and Pedestrian Facility Guidelines, Bus Stop Design and Parking Guidelines

TABLES OF CONTENTS
APPENDIX A(1)

Introduction ..... A(1)-1

SECTION A(1)-1-BICYCLE AND PEDESTRIAN FACILITY GUIDELINES

VDOT Policy To Improve Bicycle and Pedestrian Access ..... A(1)-3
Planning and Design of Bicycle Facilities ..... A(1)-7
Bicycle Access Facilities ..... A(1)-8
Existing Roads ..... A(1)-8
Major Developments and Site Plans ..... A(1)-8
Selecting Roadway Design Treatments To Accommodate Bicycles ..... A(1)-9
Design Criteria ..... A(1)-11
Design Guidelines ..... A(1)-15
Shared Roadway (Lanes) ..... A(1)-15
Signed Shared Roadways ..... A(1)-18
Bike Lanes ..... A(1)-18
Separated Bike Lanes ..... A(1)-22
Shared Use Paths ..... A(1)-22
AASHTO Approved Interstate Bicycle Routes ..... A(1)-41
Trails and Trailheads ..... A(1)-43
Rails – With – Trails ..... A(1)-46
Pedestrian Access Route and Curb Ramp Goals and Objectives ..... A(1)-48
Pedestrian Access Route ..... A(1)-48
New Construction ..... A(1)-48
Alterations ..... A(1)-49
Technically Infeasible ..... A(1)-49
Curb Ramps ..... A(1)-49
Design Guidelines For Curb Ramps ..... A(1)-49
Miscellaneous Notes ..... A(1)-50
Guidelines For Curb Ramp Locations ..... A(1)-50
Procedure For Determining The Location and Design of Curb Ramps ..... A(1)-51
Curb Ramp Elements and Types ..... A(1)-51
Perpendicular Curb Ramp (CG-12, Type A) ..... A(1)-53
Parallel Curb Ramp (CG-12, Type B) ..... A(1)-54
Combined (Parallel & Perpendicular) Curb Ramp (CG-12, Type C) ..... A(1)-55
Curb Ramp Application Details ..... A(1)-56
Diagonal Curb Ramp ..... A(1)-57
Alterations ..... A(1)-62
Guidelines For Alterations ..... A(1)-63
Alteration (Retrofit) CG-12 Into Existing Curb and Gutter and/or Sidewalk Locations A(1)-64
Buffer Strip ..... A(1)-69
Sidewalks ..... A(1)-71
Railing Requirements ..... A(1)-75
Sidewalk Transition From Roadway Onto Bridge ..... A(1)-76

Section A(1)-2 Parking Design Features

On-Street Parking..... A(1)-77
Off-Street And Park-And-Ride Lots ..... A(1)-84
Accessible Parking Spaces..... A(1)-87
Rest Areas..... A(1)-95

Section A(1)-3 Transit (Bus) Facilities Design Criteria

Bus Turnout (Bus Stop) Design: Location, Type and Dimensions..... A(1)-101
Bus (Transit) Stops, Shelters,Boarding and Alighting Areas, Signs and Benches .... A(1)-106
Transportation Facilities (Rail Platforms, Station Signs) ..... A(1)-111

LIST OF FIGURES AND TABLES

Page

Table A(1)-1-1 Bicycle Facility Design For Curb And Gutter Typical Section ..... A(1)-14
Table A(1)-1-2 Bicycle Accommodation/ Facility Design For Shoulder and Ditch Typical Section ..... A(1)-15
Figure A(1)-1-2 Typical Bike Lane Cross Sections ..... A(1)-19
Figure A(1)-1-1 (1) Bike Lanes With On-Street Parking ..... A(1)-19
Figure A(1)-1-1 (2) Parking Permitted Without Parking Stripe or Stall ..... A(1)-20
Figure A(1)-1-3 Right-Turn-Only Lane ..... A(1)-22
Figure A(1)-1-4 Typical Section of Shared Use Path With Roadway Signs and Shared Use Path Signs ..... A(1)-25
Figure A(1)-1-5 Cross Section of Two-Way Shared Use Path ..... A(1)-27
Figure A(1)-1-6 Physical Barrier For Shared-Use Path ..... A(1)-29
Table A)1)-1-3 Min. Radii For Paved Shared Use Paths Based On 20° Lean Angle ..... A(1)-31
Table A(1)-1-4 Minimum Stopping Sight Distance (Ft.) Descending Grade ..... A(1)-33
Table A(1)-1-5 Minimum Stopping Sight Distance (Ft.) Ascending Grade..... A(1)-33
Table A(1)-1-6 Minimum Length of Crest Vertical Curve (L) Based On Stopping Sight Distance ..... A(1)-34
Figure A(1)-1-7 Minimum Lateral Clearance For Horizontal Curves ..... A(1)-35
Table A(1)-1-11 Minimum Lateral Clearance For Horizontal Curves ..... A(1)-35
Figure A(1)-1-8 Detectable Warning Surface For Shared-Use Path With Shoulder..... A(1)-37
Figure A(1)-1-9 St'd. CG-12 Type B For Shared-Use Path With Curb & Gutter ..... A(1)-37
Figure A(1)-1-10 Shared Use Path Pavement Structure ..... A(1)-39
Figure A(1)-1-11 Shared Use Path Transition From Roadway Onto Bridge For Design Speeds >45 MPH..... A(1)-41
Figure A(1)-1-12..... A(1)-43
Figure A(1)-1-13 Separation Between Active Rail Lines and Paths (RWT) ..... A(1)-47
Table A(1)-1-8 Separation Between Active Rail Lines and Paths (RWT) ..... A(1)-48
Figure A(1)-1-14 Perpendicular CG-12, Type A ..... A(1)-54
Figure A(1)-1-15 Parallel CG-12, Type B..... A(1)-55
Figure A(1)-1-16 Parallel and Perpendicular CG-12, Type C..... A(1)-56
Figure A(1)-1-17 Two Cg-12 Type B For Each Direction At Intersection ..... A(1)-57

Figure A(1)-1-18 Diagonal or Corner Type Curb Ramps ..... A(1)-58
Figure A(1)-1-19 Single Diagonal Parallel Curb Ramp, CG-12, Type B ..... A(1)-59
Figure A(1)-1-20 Single Diagonal Parallel Curb Ramp, CG-12, Type B ..... A(1)-60
Figure A(1)-1-21 Type B Layout Without Buffer Strip ..... A(1)-61
Figure A(1)-1-22 CG-12, Type B Layout, With Buffer Strip ..... A(1)-62
Figure A(1)-1-23 ..... A(1)-71
Figure A(1)-1-24 Railing For Sidewalks ..... A(1)-76
Figure A(1)-1-25 Sidewalk Transition From Roadway Onto Bridge For Design Speeds >45 MPH ..... A(1)-77
Table A(1)-2-1 On-Street Parking Spaces ..... A(1)-78
Figure A(1)-2-1 Design For Accessible Parallel Parking Spaces ..... A(1)-80
Figure A(1)-2-2 Design For Accessible Parallel Parking Space Exception ..... A(1)-80
Figure A(1)-2-3 Perpendicular Accessible Parking Spaces Passenger & Loading Zones A(1)-81
Figure A(1)-2-4 Angled Accessible Parking Spaces (See R309.3) ..... A(1)-82
Figure A(1)-2-5 Access Aisle (R310.3) ..... A(1)-83
Table A(1)-2-2 Off-Street and Park-And-Ride Lot Parking Spaces ..... A(1)-86
Figure A(1)-2-6 Vehicle (Car and Van) Parking Spaces (R502.2) ..... A(1)-88
Figure A(1)-2-7 Parking Space Access Aisle (502.3) ..... A(1)-89
Figure A(1)-2-8 Accessible Parking Space With Access Aisle For Cars and Trucks ..... A(1)-90
Figure A(1)-2-9 Van Accessible Parking Space With Access Aisle (Perferred) ..... A(1)-91
Figure A(1)-2-10 Van Accessible Parking Space With Access Aisle (Optional) ..... A(1)-91
Figure A(1)-2-11 Accessible Parking Space with Access Aisle for Cars, Trucks & Vans. A(1)-92
Figure A(1)-2-12 Passenger Loading Zone Access Aisle ..... A(1)-94
Figure A(1)-2-13 Parking Space Design & Arrangement For Parking Lots and Park & Ride Lots ..... A(1)-96
Figure A(1)-2-14 Parking Space Design and Arrangement For Rest Areas ..... A(1)-97
Figure A(1)-2-15 Examples of Site Layouts For Rest Areas ..... A(1)-98
Figure A(1)-2-16 Parking Space Design For Angle Parking of Trucks ..... A(1)-100
Figure A(1)-3-1 Bus Turnout On Far-Side (Closed) ..... A(1)-102
Figure A(1)-3-2 Bus Turnout On Far-Side (Open) ..... A(1)-103
Figure A(1)-3-3 Bus Turnout On Near-Side ..... A(1)-104
Figure A(1)-3-4 Bus Turnout On Mid-Block ..... A(1)-104
Figure A(1)-3-5 Boarding and Alighting Areas ..... A(1)-107
Figure A(1)-3-6 Elements and Dimensions Associated With Bus (Transit) Stops ..... A(1)-109
Figure A(1)-3-7 Off Road Separated Bike Lane With Sidewalk ..... A(1)-110
Figure A(1)-3-8 Typical Bus (Transit) Shelter ..... A(1)-111

APPENDIX A(1)

INTRODUCTION*

A Complete Streets Policy is a transportation policy and design approach that requires streets to be planned, designed, operated, and maintained to enable safe, convenient and comfortable travel and access for users "of all ages and abilities" regardless of their mode of transportation. Complete Streets allow for safe travel by those walking, cycling, driving automobiles, riding public transportation, or delivering goods.

Although the guiding principle for complete streets is to create streets and related infrastructure that provide safe travel for all users, each complete street has to be customized and characterized by their surrounding environment and how the street fits into the community. A complete street also has to accommodate the needs and expectations of the travelers who want to access or pass through the surrounding neighborhood, community, or region.

According to the National Complete Streets Coalition, typical elements that make up a complete street include sidewalks, bicycle lanes (or wide, paved shoulders), shared-use paths, designated bus lanes, safe and accessible transit stops, and frequent and safe crossings for pedestrians, including crosswalks, median refuge islands, accessible pedestrian signals, and curb extensions. Certainly, a design for a complete street in a rural context will look quite different from one in a suburban or urban context. For example, a complete street in a rural context could involve providing wide shoulders or a shared-use path instead of sidewalks. The common denominator, however, is balancing safety and convenience to accommodate all current and anticipated users.

Transit Buses can become a more attractive option when access points that comply with the requirements of the Americans with Disabilities Act are integrated into streets, sidewalks, and parking areas to allow easier, safer access for users "of all ages and abilities".

The benefits of complete streets include:

- Making it easier for travelers to get where they need to go;
- Encouraging the use of alternative forms of transportation;
- Building more sustainable communities;
- Increasing connectivity between neighborhoods, commercial areas, streets, and transit systems;
- Improving safety for pedestrians, cyclists, and motorists.

VDOT will collaborate with localities (cities, counties, and towns), and communities as well as Transportation Planning Organizations (TPO), Metropolitan Planning Organizations (MPO) and Planning District Commissions (PDC's) during the planning and design phases of new and reconstructed street projects. Together, they will decide how to provide the appropriate transportation facility needed to serve the community and complement the surrounding environment. This policy builds on current VDOT policies and guidelines and encourages creativity for considering and providing multi-modal options within transportation projects, while achieving safety and efficiency.

---

* Added 7/18

Specific VDOT Policies and Guidelines includes:

- CTB Bicycle and Pedestrian Accommodation Policy, March 2004
  - http://www.virginiadot.org/programs/bk-documents.asp
- VDOT Instructional and Information Memorandum, IIM-LD-55 (Curb Ramps and Sidewalks)
  - http://www.extranet.vdot.state.va.us/locdes/electronic_pubs/iim/IIM55.pdf
- VDOT Instructional and Information Memorandum, IIM-TE-384 (Pedestrian Crossing Accommodations at Unsignalized Locations)*
  - http://www.virginiadot.org/business/resources/IIM/TE384_Ped_Xing_Accommodations_Unsignalized_Locs.pdf
- Multimodal System Design Guidelines
  - http://drpt.virginia.gov/activities/files/DRPT_MMSDG_FINAL_Chapters.pdf
- VDOT Instructional and Information Memorandum, IIM-TMPD-1.0 (Implementation of the CTB Policy for Integrating Bicycle and Pedestrian Accommodations)
  - http://www.virginiadot.org/business/resources/IIM/TMPD-1.0_Implementation_of_the_CTB_Policy_for_Integrating_Bicycle_and_Pedestrian_Accommodaitons.pdf
- VDOT Pedestrian Safety Action Plan
  - http://www.virginiadot.org/business/resources/VDOT_PSAP_Report_052118_with_Appendix_A_B_C.pdf
- VDOT State Bicycle Policy Plan
  - http://www.virginiadot.org/programs/bicycling_and_walking/bicycle_policy_plan.asp
- VDOT State Pedestrian Policy Plan
  - http://www.virginiadot.org/programs/bikeped/pedestrian_policy_plan.asp
- VDOT Biking and Walking Web Page
  - http://www.virginiadot.org/programs/bikeped/default.asp

Resources:

- FHWA Public Roads, July-August 2010
  - https://www.fhwa.dot.gov/publications/publicroads/10julaug/03.cfm
- Florida DOT Complete Street Implementation Web Page
  - http://www.fdot.gov/roadway/csi/default.shtm
- National Complete Streets Coalition
  - https://smartgrowthamerica.org/program/national-complete-streets-coalition/
- NCDOT Complete Streets Planning and Design Guidelines
  - *Complete Streets Guidelines* (pdf)
- Smart Growth America: Complete Streets Local Policy Workbook
  - https://smartgrowthamerica.org/resources/complete-streets-local-policy-workbook/
- Washington State DOT Complete Streets
  - https://www.wsdot.wa.gov/LocalPrograms/ATP/CompleteStreets.htm

---

* Added 7/19

SECTION A(1)-1-BICYCLE AND PEDESTRIAN FACILITY GUIDELINES

VDOT POLICY TO IMPROVE BICYCLE AND PEDESTRIAN ACCESS

On March 18, 2004, the Commonwealth Transportation Board (CTB) approved and adopted a policy aimed at providing bicyclists and pedestrian's greater access to safe transportation on roadways across the state. This policy shall supersede all current department policies and procedures related to bicycle and pedestrian accommodations.

Highlights from the policy include:

- A framework through which VDOT will accommodate bicyclists and pedestrians, including pedestrians with disabilities, along with motorized transportation modes in the planning, funding, design, construction, operation, and maintenance of Virginia's transportation network to achieve a safe, effective, and balanced multimodal transportation system.

- Sidewalks, bike lanes, shared-use paths or other accommodations will be considered in the design of all new highway and major reconstruction projects, depending on safety issues and the need.

Project Managers should be familiar with the policy prior to starting the Project Development Process. The entire policy can be obtained at
http://www.virginiadot.org/programs/resources/bike_ped_policy.pdf.

The following are a few excerpts from the policy:

The Virginia Department of Transportation (VDOT) will initiate all highway construction projects with the presumption that the projects shall accommodate bicycling and walking. VDOT will provide the leadership to implement this policy. During the decision process, the project manager and local representatives will, based on the factors listed in the policy, develop a recommendation on how and whether to accommodate bicyclists and pedestrians in a construction project prior to the public hearing. VDOT will promote the inclusion of bicycle and pedestrian accommodations in transportation planning activities at local, regional, and statewide levels. There are exceptions to the provision of accommodations.

Bicycle and pedestrian accommodations can be developed through projects that are independent of highway construction either within the highway right-of-way or on an independent right-of-way. Highway construction funds can be used to build bicycle and pedestrian accommodations either concurrently with highway construction projects or as independent transportation projects. Both types of bicycle and pedestrian accommodation projects will be funded in the same manner as other highway construction projects for each system (i.e., interstate, primary, secondary, or urban).

VDOT will work with localities (cities, counties, and towns), and communities as well as Transportation Planning Organizations (TPO), Metropolitan Planning Organizations (MPO) and Planning District Commissions (PDC's) to select and design accommodations, taking into consideration community needs, safety, and unique environmental and aesthetic characteristics as they relate to specific projects. The selection of the specific accommodations to be included in a project shall be based on the application of appropriate planning design, and engineering principles.

Bicycle and Pedestrians accommodations shall be designed and built, or installed, using the VDOT *Road Design Manual*, VDOT *Roads and Bridge Standards* and *Specifications*, the AASHTO *Guide for the Development of Bicycle facilities*, AASHTO *Guide for the Planning Design and Operation of Pedestrian Facilities*, the *Proposed Accessibility Guidelines for Pedestrian Facilities in the Public Rights-of-Way* (PROWAG) dated July 26, 2011, *Manual on Uniform Traffic Control Devices (MUTCD)* and the *2011 Virginia Supplement to the MUTCD.*

Below are additional nationally recognized resources to build upon the flexibilities provided in the AASHTO guides, which can help communities plan and design safe and convenient facilities for pedestrians, bicyclists and transit users.

On August 20, 2013 FHWA issued a Memorandum expressing support for taking a flexible approach to bicycle and pedestrian facility design. In doing so, FHWA supports the use of The National Association of City Transportation Officials (NACTO) *NACTO Urban Bikeway Design Guide* and the *ITE Designing Urban Walkable Thoroughfares: A context Sensitive Approach* to build upon the flexibilities provided in the AASHTO guides, which can help communities plan and design safe and convenient facilities for pedestrians and bicyclists.

On July 25, 2014, FHWA's Offices of Planning, Environment, and Realty; Infrastructure; Safety; and Operations jointly issued a Memorandum announcing their official support and endorsement of *NACTO Urban Street Design Guide.*

In May 2015, FHWA released the *Separated Bike Lane Planning and Design Guide*, which outlines planning considerations for separated bike lanes (also sometimes called "cycle tracks" or "protected bike lanes") and provides a menu of design options covering typical one and two-way scenarios. The guide consolidates lessons learned from practitioners designing and implementing separated bike lanes throughout the U.S.

In March 2016, ITE released *Recommended Design Guidelines to Accommodate Pedestrians and Bicycles at Interchanges: An ITE Recommended Practice.*

On April 21, 2016, NACTO released the *NACTO Bike Share Station Sitting Guide* https://nacto.org/wp-content/uploads/2016/04/NACTO-Bike-Share-Siting-Guide_FINAL.pdf, which highlights best practices in station placement and design. This Guide is a highly useful resource for bike share planners and operators, providing clear standards for how and where to install bike share stations. This Guide is also a complement to NACTO's successful *Urban Bikeway Design Guide and Urban Street Design Guide.*[*]

[*] Rev. 7/19

In August 2016, FHWA released *Achieving Multimodal Networks: Applying Design Flexibility and Reducing Conflicts* which highlights ways that planners and designers can address common roadway challenges and barriers by focusing on reducing multimodal conflicts achieving connected networks so that walking and bicycling are safe, comfortable and attractive options for people of all ages and abilities. All of these guides build upon the flexibilities provided in the AASHTO Guides and are designed to help municipalities consider, evaluate and design a complete street network.

On October 13, 2016, NACTO and the Global Designing Cities Initiative unveiled the *NACTO Global Street Design Guide*, the first-ever worldwide standard for redesigning city streets to prioritize safety, pedestrians, transit and sustainable mobility for an urban century. The Global Street Design Guide establishes a global baseline for designing streets and public spaces while redefining the role of streets in a rapidly urbanizing world. The Guide broadens how to measure the success of urban streets to include access, safety and mobility for all users, environmental quality, economic benefit, public health and overall quality of life.

In July 2017, ITE released *Protected Bikeways Practitioners Guide* to provide transportation professionals with an easy-to-navigate document for planning, designing, operating, and implementing protected bikeways in the United States and Canada.*

The 2017 Act of the General Assembly passed HB 2023, which allows Road Diets to be implemented statewide without the loss of maintenance payments provided certain criteria are met. *§ 33.2-319* of the Code of Virginia was amended and reenacted.

The following resources are available:

- *FHWA Road Diet Informational Guide*
- *FHWA Incorporating On-Road Bicycle Networks into Resurfacing Projects*

In August 2017, ITE released the *Protected Bikeways Practitioners Guide*, developed by the ITE Complete Street Council with support from ITE Technical Programs Division staff. The Guide is intended to provide transportation professionals with an easy to navigate document for planning, operating and implementing protected bikeways in the United States and Canada. The Guide also provides references to the critical design standards and guidelines that direct the geometric and operational design of protected bikeways, including international best practices and research and fills current design gaps in guidance based on best practice example.

In August 2017, the Federal Transit Administration (FTA) released the *Manual on Pedestrian and Bicycle Connections to Transit*, which provides a compendium of best practices to assist transportation professions improve pedestrian and bicycle safety and access to transit, including information on evaluating, planning for, and implementing improvements to pedestrian and bicycle access to transit.

In October 2017, FHWA released *Accessible Shared Streets: Notable Practices and Considerations for Accommodating Pedestrians with Vision Disabilities*.

---

* Rev. 1/18

This Document captures the national state of the practice for accommodating pedestrians with vision disabilities on shared streets, helps State and local partners meet Americans with Disabilities Act (ADA) obligations, and serves as a model for engaging people with disabilities in the planning process. This document focuses on accessibility, specifically on streets where pedestrians, bicyclists, and motor vehicles are intended to mix in the same space rather than streets that lack curbs but are not intended to encourage this mixing, such as curbless streets.

On November 14, 2017, the Pedestrian and Bicycle Information Center (PBIC) updated the *Design Resource Index* that identifies the specific location of information in key national design manuals for various pedestrian and bicycle design treatments. The Design Resource Index aims to help practitioners quickly access resources and reduce the amount of time for design guide searches. Resource: The PBIC Messenger, which is maintained by the University of North Carolina.

On November 29, 2017, ITE released *Implementing Context Sensitive Design on Multimodal Corridors: A Practitioner's Handbook*. This informational report was developed through an external contract with the FHWA Office of Human Environment, supported by ITE Technical Programs Division staff, which complements ITE's 2010 "Designing Walkable Urban Thoroughfares" recommended practice. It is geared towards practitioners facing safety and mobility challenges in urban and suburban spaces. It distills the latest research, evidence, and case studies that practitioners need to advance their projects and focuses upon thoroughfares, or arterial and collector roadways, which are often the most challenging streets to redesign.

In December 2017, The National Association of City Transportation Officials (NACTO) released *Designing for All Ages & Abilities*: Contextual Guidance for High-Comfort Bicycle Facilities that examines criteria for implementing bicycle infrastructure and facilities. This report considers factors including vehicle speeds and volumes, operational uses, and observed sources of bicycling stress. This report builds on *NACTO Urban Street Design Guide* and sets an All Ages & Abilities criteria for selecting and implementing bike facilities.

In February 2018, FHWA released *FHWA Guidebook for Measuring Multimodal Network Connectivity*. This resource focuses on pedestrian and bicycle network connectivity and provides information on incorporating connectivity measures into state, metropolitan, and local transportation planning processes.

In July 2018, FHWA Updated the *Guide for Improving Pedestrian Safety at Uncontrolled Locations* *https://www.fhwa.dot.gov/innovation/everydaycounts/edc_4/guide_to_improve_uncontrolled_crossings.pdf* that was released in January 2018. This guide assists state and local transportation or traffic safety departments that are considering developing a policy or guide to support the installation of countermeasures at uncontrolled pedestrian crossing locations. This document provides guidance to agencies, including best practices for each step involved in selecting countermeasures. By focusing on uncontrolled crossing locations, agencies can address a significant national safety problem and improve quality of life for pedestrians of all ages and abilities. Agencies may use this guide to develop a customized policy or to supplement existing local decision-making guidelines. This version has been updated to include the Rectangle Rapid-Flashing Beacon (RRFB). FHWA issued a new Interim Approval (IA-21) for the use of RRFBs in March 2018.[*]

[*] Rev. 1/19

In July 2018, FHWA Updated the *Field Guide for Selecting Countermeasures at Uncontrolled Pedestrian Crossing Locations* *https://www.fhwa.dot.gov/innovation/everydaycounts/edc_4/pocket_version.pdf* that was also released in January 2018. This field guide helps agencies select pedestrian crash countermeasures based on criteria established in published literature, best practices, and national guidance. This guide includes a form that the agency may use to document roadway characteristics and pedestrian safety issues. It also tables that relate these documented conditions to a specific set of countermeasure options. A series of descriptions lead the agency through additional installation considerations for each countermeasure.

This version has also been updated to include the Rectangle Rapid-Flashing Beacon (RRFB). FHWA issued a new Interim Approval (IA-21) for the use of RRFBs in March 2018.

In November 2018, the ITE Complete Streets Council released the *Curbside Management Practitioners Guide* *https://www.ite.org/technical-resources/topics/complete-streets/ite-curbside-management-practitioner-s-resource/* in response to widespread interest in the designation and optimization of curb space to accommodate the needs of all users. The purpose is to outline a decision-making framework that can be applied across a broad spectrum of locations and contexts

In February 2019, FHWA released the *Bikeway Selection Guide* to help transportation practitioners consider and make informed trade-off decisions relating to the selection of bikeway types. It is intended to supplement planning and engineering judgement. It incorporates and builds upon the FHWA support for design flexibility to assist transportation agencies in the development of connected, safe, and comfortable bicycle networks that meet the needs of people of all ages and abilities. The FHWA *Bikeway Selection Guide* can be accessed at *https://safety.fhwa.dot.gov/ped_bike/tools_solve/docs/fhwasa18077.pdf*

On May 20, 2019, NACTO released *Don't Give Up at the Intersection*, which includes best practices for next-generation intersection designs that save lives and make walking and biking more comfortable for people of all ages and abilities. The new guidance expands the groundbreaking NACTO Urban Bikeway Design Guide with new diagrams detailing intersection design treatments and signal strategies that reduce vehicle-bike and vehicle-pedestrian conflicts. *

The guidance, funded by Knight Foundation, uses three principles to enhance safety at the intersection, where conflicts between street users are most frequent: Reduce turning speeds, Make bikes and pedestrians visible and Give bikes the right of way.

Don't Give Up at the Intersection can be accessed at *https://nacto.org/publication/urban-bikeway-design-guide/dont-give-up-at-the-intersection/*

PLANNING AND DESIGN OF BICYCLE FACILITIES

During project scoping/SMART Scale application development the VDOT District Planner will coordinate with the locality to address bicyclist and pedestrian access along the corridor as well as to existing and planned transit connections.

---

* Rev. 7/19

During the preparation of an environmental document, environmental impact statement (EIS), environmental assessment (EA), categorical exclusion (CE), programmatic categorical exclusion (PCE), etc. VDOT will consider the current and anticipated future use of the affected facilities by bicyclists and pedestrians, the potential impacts of the alternatives on bicycle and pedestrian travel, and proposed measures, if any, to avoid or reduce adverse impacts to the use of these facilities by bicyclists and pedestrians.

Discussion will take place at the scoping meeting concerning the expected type of bicyclist that will use the facility and the type of facility to be designed. The District, Transportation and Mobility Planning Division, Locality and other interested parties will provide input on the type of facility to be designed on a particular project. Individuals involved in the planning and design of bicycle facilities should be familiar with the resources mentioned in the previous section titled: **"VDOT POLICY TO IMPROVE BICYCLE AND PEDESTRIAN ACCESS".**

The procedure for planning and designing a bicycle facility is based on the following:

1. Roadway typical section
2. Motor vehicle traffic volume (ADT)
3. Design or posted speed of the roadway

The Guidelines and TABLES in SELECTING ROADWAY DESIGN TREATMENTS TO ACCOMMODATE BICYCLES are recommended as bicycle facility design criteria, but in no case should a bicycle facility be designed with criteria less than those contained in the VDOT/AASHTO/NACTO DESIGN GUIDELINES.

BICYCLE ACCESS FACILITIES

VDOT may participate in the development of bicycle access facilities (Shared Use Paths and Trails) to serve public recreational areas, such as county and state parks and historic sites based on the current *Recreational Access Fund Policy.*

EXISTING ROADS

In some instances, for route continuity, bicycle facilities may be routed over existing facilities which are not planned for expansion. In these cases, the facilities are an operational feature and usually result in the identification of a bike lane, restriction of parking, or some other physical modification to accommodate bicycle travel. It is necessary for the State Transportation and Mobility Planning Division Administrator to coordinate with the District Planner, District Traffic Engineer, and appropriate Divisions in the Central Office to assure agreement on the method of treatment for a bikeway over an existing route.

MAJOR DEVELOPMENTS AND SITE PLANS

When bicycle facilities are considered as part of the total development of a property where the road system will be maintained in the future by VDOT and the local government requires bicycle facilities in new developments, the following conditions must be satisfied:

- The bicycle element of the entire plan for the development must be reviewed and approved by the local government prior to final approval by the District Transportation Land Use Director or designee*. Appropriate review must be made, and communication regarding the resolution of bicycle facility systems must be carried on between the District Transportation Land Use Director, District Planner and the responsible District Traffic Engineer.

- Along any roadways identified in the site plan, which will be maintained in the future by VDOT, a bicycle facility may be incorporated into the development parallel to but off of the right of way dedicated for street purposes. The maintenance and the responsibility for operating the bicycle facility would fall on the owner, which would be the locality, the developer, or other entity with the responsibility of maintenance of the common land of the development and **not** the responsibility of VDOT. The bicycle facility right of way will be exclusive of the roadway right of way; thus, future changes and/or modifications in the bicycle facility would **not** be the responsibility of VDOT.

- Bicycle facilities within the VDOT right of way shall be designed in accordance with the resources and guidelines discussed in the sections titled: **"VDOT POLICY TO IMPROVE BICYCLE AND PEDESTRIAN ACCESS"** and **"SELECTING ROADWAY DESIGN TREATMENTS TO ACCOMMODATE BICYCLES".**

For major developments and site plans where the roadway system will **not** be maintained in the future by VDOT, all bicycle facility connections to VDOT maintained facilities shall be subject to review and approval by the District Transportation Land Use Director or designee.

SELECTING ROADWAY DESIGN TREATMENTS TO ACCOMMODATE BICYCLES

Choosing the appropriate bicycle facility type is important. No one type of bicycle facility or highway suits every bicyclist. Within any given transportation corridor, bicyclists may be provided with more than one option to meet the travel and access needs of all potential users.

The choice of highway design will affect the level of use, the types of user that can be expected to use any given road and the level of access and mobility that is afforded bicyclists. For example, a four-lane divided highway with 12-foot travel lanes, no shoulder and a 55 mph speed limit will attract only the most confident of riders. The same road with a 5-foot shoulder or bike lane might provide sufficient "comfortable operating space" for many more adult riders, but would still **not** be comfortable for children or less confident adults. This latter group might only be accommodated through an alternative route using neighborhood streets linked by short sections of a shared use path. If such an alternative route is provided and the four-lane road has a continuous paved shoulder, most experienced and many casual adult riders will continue to use the shoulder for the sake of speed and convenience.

Facilities for bicyclists should also be planned to provide continuity and consistency for users "of all ages and abilities". Children using a bicycle facility to get to school should **not** have to cross a major arterial without some type of intersection control(s). Shoulders and bike lanes should **not** end abruptly and unannounced at a difficult intersection or busy stretch of highway.

---

* Rev. 7/18

The selection of a bicycle facility type is dependent on many factors, such as the roadway typical section, motor vehicle traffic volume (ADT), design speed or posted speed of the roadway as well as the age and ability of the users and the specific corridor conditions.

AASHTO and FHWA designates bicycle facility types as Shared Lanes (No Use of Bikeway Designation Markings or Signs), Signed Shared Roadway (Designated by Bicycles "May Use Full Lane" Signs), Marked Shared Roadway (Designated by Shared Lane Markings "Sharrows" if the roadway posted speed is equal to or less than 35 mph), Bike Lane (Designated as such by Markings and Signs), Shared Use Path, Separated Bike Lane (Designated as such by Markings and Signs) and Paved Shoulders (Delineating (marking and signing) a Bike Lane within the limits of the required paved shoulder area is **not** permitted).

The following are explanations of when and why each of these facilities may be appropriate. Design parameters for these facilities are discussed later in this section.

- Shared Roadway (Lanes) (Not designated by Markings or Signs as a Bikeway) - Most bicycle travel in the United States now occurs on streets and highways without bikeway designations. In some instances, a community's existing street system may be fully adequate for safe and efficient bicycle travel and signing and striping for bicycle use may be unnecessary. In other cases, some streets and highways may be unsuitable for bicycle travel at present, and it would be inappropriate to encourage bicycle travel by designating the routes as bikeways. Finally, some routes may not be considered high bicycle demand corridors, and it would be inappropriate to designate them as bikeways regardless of roadway conditions (e.g., minor residential streets).

- Some rural highways are used by touring bicyclists for recreational travel. In most cases, such routes should only be designated as bikeways where there is a need for enhanced continuity with other bicycle routes. However, the development and maintenance of 4foot paved shoulders with a 4 inch edge stripe can significantly improve the safety and convenience of bicyclists and motorists along such routes.

- Wide Curb/Outside Lanes – Allows motorist to pass bicyclists without encroaching into the adjacent lane. Also provides additional usable width on sections with steep grades or on sections where drainage grates, raised delineators, or on-street parking effectively reduces the usable width. A wide curb/outside lane is at least 14 feet, but not greater than 15 feet. *

- Signed Shared Roadway – Signed shared roadways are designated by Bicycles "May Use Full Lane" signs, bike route signs, and serve either to provide continuity to other bicycle facilities (usually Bike Lanes) or designate preferred routes through high-demand corridors.

- Marked Shared Roadway – Marked Shared Roadways are designated by Shared Lane Markings "Sharrows" and are to be only be used when the roadway posted speed is equal to or less than 35 mph. The markings serve to provide a higher level of guidance to bicyclists and motorists sharing the roadway as well as alerting motorists to the lateral position bicyclists are likely to occupy within the traveled roadway.

* Rev. 7/18

- Bike Lane - A portion of the roadway designated by striping, signing, and pavement markings for preferential or exclusive use by bicyclists. They are one-way facilities that carry bicycle traffic in the same direction as adjacent motor vehicle traffic. Bike lanes have horizontal separation (i.e. pavement markings, such as 4" or 6" solid white lines) but do not have vertical separation between the bike lane and the vehicle travel lane and/or parking lane. *

- Buffered Bike Lane – Bike lanes with horizontal separation (i.e. additional pavement markings, such as a painted buffer), but without vertical separation between the bike lane and vehicle lane and/or parking lane.

- Separated Bike Lane - A facility (also sometimes called "cycle track" or "protected bike lanes") located within or directly adjacent to the roadway that has both horizontal separation (i.e. additional pavement markings, such as a painted buffer) and vertical separation (i.e. flexible delineators, curb medians, on-street parking, landscaping) between the bike lane and vehicle travel lane and/or parking lane. . They are differentiated from bike lanes and buffered bike lanes by the vertical separation mentioned above and differentiated from shared use paths by their more proximate relationship to the adjacent roadway and the fact that they are bike-only facilities. See FHWA Separated Bike Lane Planning and Design Guide, which outlines planning considerations for separated bike lanes and provides a menu of design options covering typical one and two-way scenarios. The guide consolidates lessons learned from practitioners designing and implementing separated bike lanes throughout the U.S.

- Shared Use Path - Generally, shared use paths should be used to serve corridors not served by streets and highways or where wide utility or former railroad right-of-way exists, permitting such facilities to be constructed away from the influence of parallel streets. Shared use paths should offer opportunities not provided by the road system. They can provide a recreational opportunity or, in some instances, can serve as direct commute routes if cross flow by motor vehicles and pedestrians is minimized.

- Paved Shoulders – The paved portion of the roadway to the right of the edge stripe that extends the service life of the roadway by reducing edge deterioration, and provides a space for temporary storage of disable vehicles.

DESIGN CRITERIA

- Shared Roadway (Lanes) - Shared motor vehicle/bicycle use of a "standard" width travel lane. See GS Standards in Appendix A.

- Wide Curb/Outside Lanes - An outside travel lane with a width of at least 14 feet, but not greater than 15 feet. See **"DESIGN GUIDELINES"** for design standards discussed later in the section.

* Rev. 1/20

- Bike Lane - A portion of the roadway designated by striping, signing, and/or pavement markings for preferential or exclusive use by bicycles. On urban projects the bike lane width is the distance from the face of the curb or front edge of gutter pan to the bike lane stripe. Therefore, the bike lane stripe will be 4 feet minimum from the front edge of the gutter pan and 5 feet minimum from the face of curb without gutter pan. Bike lanes have horizontal separation (i.e. pavement markings, such as 4" or 6" solid white lines) but do not have vertical separation between the bike lane and the vehicle travel lane and/or parking lane.* See FIGURES A(1)-1-1(1), A(1)-1-1(2), A(1)-1-2 and A(1)-1-3. See **"DESIGN GUIDELINES"** for design standards discussed later in this section.

- Buffered Bike Lane – Bike lanes with horizontal separation (i.e. additional pavement markings, such as a painted buffer), but without vertical separation between the bike lane and vehicle lane and/or parking lane. See FHWA Separated Bike Lane Planning and Design Guide and NACTO Urban Bikeway Design Guide for design criteria for one-way and two-way facilities.

- Separated Bike Lane - A facility (also sometimes called "cycle track" or "protected bike lanes") are located within or directly adjacent to the roadway that has both horizontal separation (i.e. additional pavement markings, such as a painted buffer) and vertical separation (i.e. flexible delineators, curb median, on-street parking, landscaping) between the bike lane and vehicle travel lane and/or parking lane. Practitioners have flexibility in choosing specific design elements. Separated bike lanes can operate as one-way or two-way facilities; their designs can integrate with turning automobile traffic at intersections or can be more fully separated; they can be designed at roadway grade, at sidewalk grade or at an intermediate grade.. See FHWA Separated Bike Lane Planning and Design Guide and NACTO Urban Bikeway Design Guide for design criteria for one-way and two-way facilities.

- Shared Use Path - Shared use paths are facilities physically separated from motorized vehicular traffic by an open space (buffer) or barrier and either within the highway right of way or within an independent right of way. Users are non-motorized and may include bicyclists, inline skaters, roller skaters, wheelchair users (both non-motorized and motorized) and pedestrians including walkers, runners, and people with baby strollers and people walking dogs. Shared use paths are most commonly designed for two-way travel, and the following guidance assumes a two-way facility is planned unless otherwise stated. When paths are planned, it is desirable to provide paths on both sides of the roadway to decrease the likelihood of children crossing the road. See **"VDOT/AASHTO DESIGN GUIDELINES"** for design standards discussed later in the section. See FIGURES A(1)-1-4 and A(1)-1-5. Care should be taken not to use shared use path and trail interchangeably because they have distinctly different design guidelines. Pavement design for shared use paths are recommended by the Materials Division.

- Paved Shoulder - A minimum 4 feet paved portion of the roadway to the right of the edge stripe on which bicyclists may ride. Note: However delineating (signing or marking) bike lanes within the limits of a required shoulder area is not permitted. See **"DESIGN GUIDELINES"** for design standards discussed later in the section.

---

* Rev. 1/20

TABLES A(1)-1-1and A(1)-1-2 below indicate the appropriate facility types* that are safe, comfortable and equitable for user "of all ages and abilities". The facility types are based on the roadway typical section (curb and gutter with and without parking, and shoulder and ditch), motor vehicle traffic volume (ADT) and design speed or posted speed of the roadway. A combination of facility types may be appropriate based on the users and/or Locality's Transportation Plan. The design treatments are considered "minimum criteria". Controlled-access freeways are considered a special case and are **not** addressed in these TABLES.

Roadway improvements such as bicycle facilities depend on the roadway's design. Bicycle facilities located on independent alignment depend on many factors, including the performance capabilities of bicyclist and other users. The following TABLES also include specific recommendations for shared use path and separate bike lane facilities. See **"DESIGN GUIDELINES"** for design standards for Shared-Use Paths and **"DESIGN GUIDELINES"** for design standards for Separated Bike Lanes discussed later in this section.

* Rev. 7/18

Design Speed or Posted Speed	AVERAGE DAILY TRAFFIC (ADT) VOLUME					
	WITHOUT PARKING			WITH PARKING (3)		
	Less than 3,000 (2)	3,000 to 6,000 (2)	Over 6,000 (2)	Less than 3,000 (2)	3,000 to 6,000	Over 6,000
25 mph (1)	wc 14	wc 15 or bl 4	bl 5	wc 14	bbl or bl 5	sup or sbl
30-35 mph (1)	bl 4	bl 5	bbl or bl 6	bl 5	bbl or bl 6	sup or sbl
40-45 mph	sup or sbl	sup or sbl	sup or sbl	--	--	--
Greater than 45 mph	sup	sup	sup	--	--	--

Source: FHWA Bikeway Selection Guide, February 2019, pages 47 & 48 in the literature review and pages 22 & 23 in the Bikeway Selection Guide

TABLE A(1)-1-1
BICYCLE FACILITY DESIGN FOR CURB AND GUTTER TYPICAL SECTION
(widths are in feet) *

Key: wc = wide curb lane; bl = bike lane; sbl = separated bike lane; sup = shared use path, bbl = Buffered Bike Lane
(See **DESIGN GUIDELINES** in this Appendix for sbl and sup widths)

Without Parking
wc and bl widths represent "usable widths" measured from lane stripe to front edge of the gutter pan, not to the face of curb. **If no gutter pan is provided, add 1 foot minimum for shy distance from the face of curb.** For VDOT projects, the bike lane stripe will be 4 feet minimum from the front edge of the gutter pan. The bike lane stripe will be 5 feet minimum from the face of curb.

With Parking
wc widths represent "usable widths" measured from the left edge of the parking space (7 to 8 ft. minimum from the face of curb) to the left stripe of the travel lane. The bl width represents the minimum width measured from the left edge of the parking space (7 to 8 ft. minimum from the face of curb) to the right stripe of the travel lane.

Notes:

1. Shared Lane Markings (Sharrows) are recommended for use on wide curb lanes when the posted speed is less than or equal to 35 mph. Shared Lane Markings shall not be used in designated bike lanes.

* Rev. 1/20

2. When design year ADT exceeds 2000 VPD, with >5% total Truck and Bus usage and the roadway is designated as an AASHTO Approved U.S. Bike Route (1, 76 and 176) or the roadway is designated as a Bicycle Route on a Locality's Transportation Plan, a minimum 5 feet bike lane shall be provided.

3. On-Street Parking is only allowed on roadways functionally classified as collectors or locals where the posted speed is 35 mph or less.

Design Speed or Posted Speed	AVERAGE DAILY TRAFFIC (ADT) VOLUME		
	Less than 3,000 (1) (2)	3,000 to 6,000 (1) (2) (3)	Over 6,000 (1) (2) (3)
25 mph	sh 4	sh 4	sh 5
30-35 mph	sh 4	sh 5	sh 6
40-45 mph	sh 6	sup or sh 6	sup or sh 6
Greater than 45 mph	sup or sh 6	sup or sh 6	sup or sh 6

Source: FHWA Bikeway Selection Guide, February 2019, pages 47 & 48 in the Literature Review and pages 24 & 25 in the Bike Selection Guide*

TABLE A(1)-1-2

BICYCLE ACCOMMODATION / FACILITY DESIGN FOR SHOULDER AND DITCH TYPICAL SECTION

(widths are in feet)

Key:sh = paved shoulder; sup = shared use path
(See **DESIGN GUIDELINES** in this Appendix for sup widths)

Notes:

1. Delineating (signing or marking) bike lanes within the limits of the required paved shoulder area is not permitted. In order to delineate the bike lane, the bike lane shall be provided in addition to the required paved shoulder area.

2. Shared Lane Markings (Sharrows) shall not be used on shoulders.

3. When design year ADT exceeds 2000 VPD, with >5% total Truck and Bus usage and the roadway is designated as an AASHTO Approved U.S. Bike Route (1, 76 and 176) or the roadway is designated as a Bicycle Route on a Locality's Transportation Plan, a minimum 5 feet paved shoulder shall be provided.

* Rev. 1/20

DESIGN GUIDELINES

The following design guidelines are to be used in the design of bicycle facilities and have been obtained from AASHTO's 2012 "*Guide for the Development of Bicycle Facilities*" and in combination with VDOT Policy. Only key information from AASHTO's Guide is contained in this VDOT publication. Individuals involved in the planning and design of bicycle facilities should be familiar with and refer to the latest AASHTO Guides, FHWA Guides and NACTO Guides for additional information. AASHTO criteria will be considered as "minimum criteria" by designers.

These design guidelines consider the following types of* bicycle facilities: Shared Roadway (Lanes) (No Bikeway Designation using Markings or Signs), Signed Shared Roadway (Designated by Bicycles "May Use Full Lane" Signs), Marked Shared Roadway (Designated by Shared Lane Markings "Sharrows" if the roadway posted speed is equal to or less than 35 mph), Bike Lane (Designated by Markings and Signs), Shared Use Path, Separated Bike Lane (Designated as such by Markings and Signs) and Paved Shoulders (Delineating (marking and signing) a Bike Lane within the limits of the required paved shoulder area is **not** permitted).

When bicycle facilities are proposed, the roadway conditions will be examined for potential problems specific to bicyclists.

SHARED ROADWAY (LANES)

The most critical variable affecting the ability of a roadway to accommodate bicycle traffic is width. Adequate width may be achieved by providing paved shoulders or wide curb/outside lanes.

- Paved Shoulders

  Paved shoulders should be at least 4 feet wide to accommodate bicycle travel. However, where 4 feet minimum widths cannot be provided, any additional shoulder width is better than none at all. A shoulder width of 5 feet is required from the face of guardrail, curb or other roadside barriers, or if motor vehicle speeds exceed 50 mph, or the percentage of trucks, buses, and recreational vehicles is 5% or greater, or if lateral obstructions exist at the right side of the roadway. It is desirable to increase the width of shoulders where higher bicycle usage is expected. **Paved shoulders are not to be designated (signed or marked) as "bike lanes".**

  On rural and urban collector and local roads and streets, with shoulder and ditch typical sections provide minimum 5 feet wide paved shoulders when:

  a) Design Year ADT > 2000 VPD, with ≥ 5% total truck and bus usage

     and

  b) The route is an AASHTO Approved U.S. Bicycle Route (1, 76 or 176) or designated as a bicycle route on a Locality's Transportation Plan.

  Note: For the above situations, the remainder of the shoulder will be topsoil and seeded.

---

* Rev. 7/18

AASHTO's recommendations for shoulder width (as described in *A Policy on Geometric Design of Highways and Streets)* are the best guide for bicycles as well, since wider shoulders are recommended on heavily traveled and high-speed roads and those carrying large numbers of trucks. In order to be usable by bicyclists, the shoulder must be paved.

Rumble strips or raised pavement markers, where installed to discourage or warn motorists they are driving on the shoulder, are not recommended where shoulders are used by bicyclists unless there is a minimum clear path of 1 foot from the rumble strip to the traveled way, 4 feet from the rumble strip to the outside edge of paved shoulder, or 5 feet to adjacent guardrail, curb or other obstacle. If existing conditions preclude achieving the minimum desirable clearance, the width of the rumble strip may be decreased or other appropriate alternative solutions should be considered. VDOT's policy is to not install pavement markers along the outside edge line of a travelway. For more information, see IIM-LD-212 on (Rumble Strips and Rumble Stripes). *

- Wide Curb/Outside Lanes

  Wide outside lanes for bicycle use are usually preferred where shoulders are not provided, such as in restrictive urban areas. On highway sections without designated bikeways, an outside or curb lane wider than 12 feet can better accommodate both bicycles and motor vehicles in the same lane and thus is beneficial to both bicyclists and motorists.

  In general 14 feet of usable lane width is the recommended width for shared use in a wide outside lane. Usable width normally would be from edge stripe to lane stripe or from the longitudinal joint of the gutter pan to lane stripe (the gutter pan should not be included as usable width). On stretches of roadway with steep grades where bicyclists need more maneuvering space, the wide outside lane should be slightly wider where practicable (15 feet is preferred). The 15 foot width may also be necessary in areas where drainage grates, raised reflectors on the right-hand side of the road, or on-street parking effectively reduce the usable width. With these exceptions in mind, widths greater than 14 feet that extend continuously along a stretch of roadway may encourage the undesirable operation of two motor vehicles in one lane, especially in urban areas, and therefore are not recommended. In situations where more than 15 feet of pavement width exists, consideration should be given to striping bike lanes or shoulders.

* Rev. 7/18

SIGNED SHARED ROADWAYS

The distinction between shared roadways and signed shared roadways is that signed shared roadways are those that have been identified by signing as preferred bike routes.

BIKE LANES

Bike lanes are incorporated into a roadway design when it is desirable to delineate available road space for use by bicyclists and motorists. Urban settings will typically use a bike lane to accommodate bicyclists (See FIGURE A(1)-1-2(1)). In Rural areas a minimum 4 feet paved shoulder is required to accommodate bicyclists (See FIGURE A(1)-1-2(2)). However delineating (signing or marking), bike lanes within the limits of the required paved shoulder area is not permitted.

Bike lanes should be one-way facilities and carry bike traffic in the same direction as adjacent motor vehicle traffic. **A two-way bike lane on one side of the roadway is <u>not</u> permitted unless it is a separated bike lane.**[*] See FHWA *Separated Bike Lane Planning and Design Guides*. In general, on one-way streets, a bike lane should be placed only on the right side of the street unless the street is designated as a Bike Boulevard. See NACTO *Urban Bikeway Design Guide*.

Where on-street parking is permitted as shown in FIGURES A(1)-1-1(1) and A(1)-1-1(2) , the bike lane shall be placed between the parking area and the travel lane and have a minimum width of 5 feet. **Bike lanes should never be placed between the parking lane and curb line, unless it is a separated bike lane.** See FHWA "*Separated Bike Lane Planning and Design Guide*"

(With Curb and Gutter) (Without Gutter)

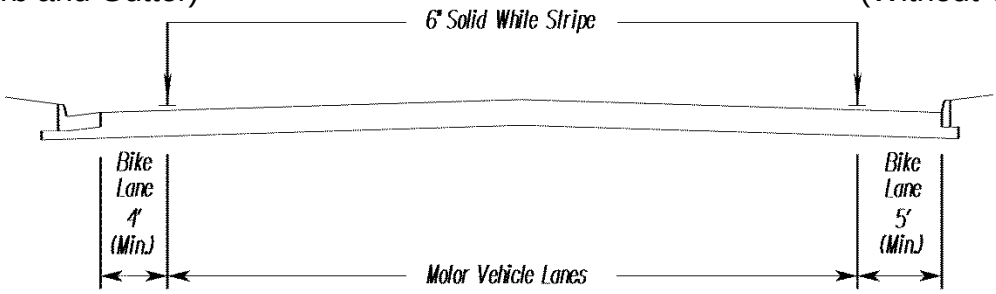

(1) BIKE LANES WITHOUT ON-STREET PARKING

[*] Rev. 1/20

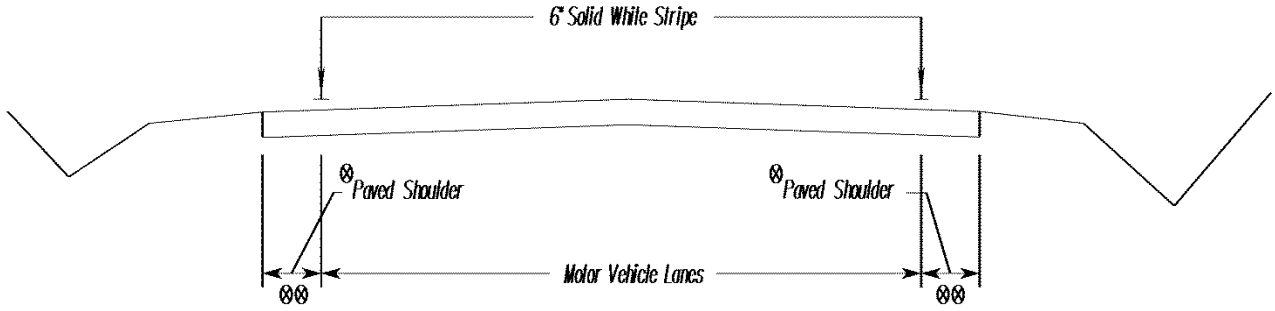

(2) BIKE ACCOMMODATIONS WITHIN THE LIMITS OF THE REQUIRED PAVED SHOULDER AREA

⊗ Delineating (signing or marking) bike lanes within the limits of the required paved shoulder area is not permitted.

⊗⊗ 4 feet minimum paved shoulder is required to accommodate bicyclists.

⊗⊗ 5 feet minimum paved shoulder is required from the face of guardrail or other roadside barriers.

FIGURE A(1)-1-2
TYPICAL BIKE LANE CROSS SECTIONS

- On-Street Parking with Parking Stripe or Stalls*. See FIGURE A(1)-1-1(1).

  When there is on-street parking on urban roadways, the bicycle riding location is in the area between parked cars and moving motor vehicles. 12 feet of combined bicycle travel and parking width should be the minimum considered for this type of shared use. Striping should be provided to delineate the parking stalls.

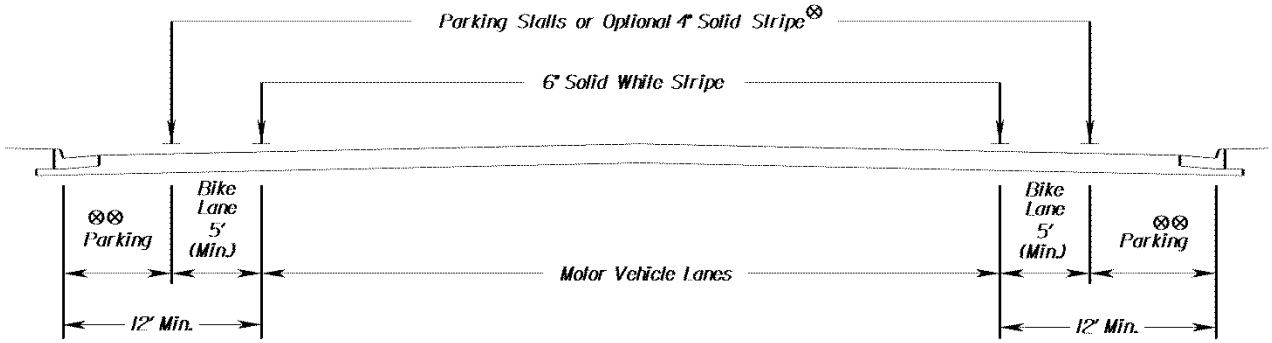

FIGURE A(1)-1-1
(1) BIKE LANES WITH ON-STREET PARKING

⊗The optional solid white stripe may be advisable where stalls are unnecessary (because parking is light) but there is concern that motorists may misconstrue the bike lane to be a traffic lane.

⊗⊗7' for Residential Street and 8' Commercial and mix use.

* Rev. 7/17

- On-Street Parking Without Parking Stripe or Stalls. See FIGURE A(1)-1-1(2).

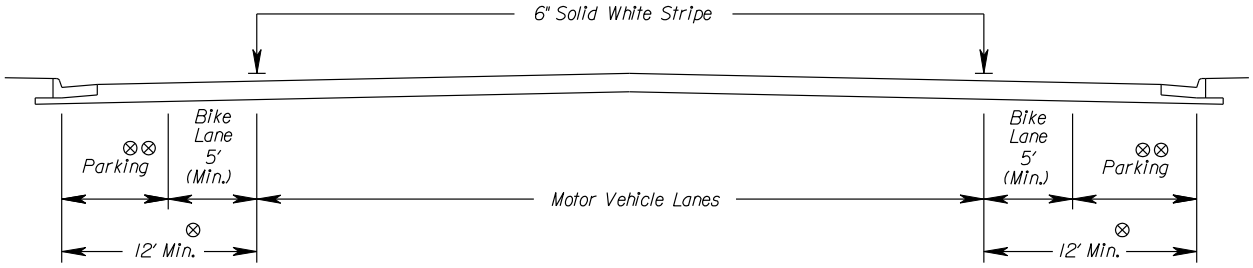

⊗13 feet is recommended where there is substantial parking or turnover of parked cars is high (e.g. commercial areas).

⊗⊗7 feet for Residential Streets and 8 feet for Commercial and mix use Streets.

FIGURE A(1)-1-1
(2) PARKING PERMITTED WITHOUT PARKING STRIPE OR STALL
(Bike lane not designated or marked)

- Bike Lane Widths

The width of a bike lane is 5 feet minimum from the face of a curb to the bike lane stripe on roadways without a gutter pan. The width of a bike lane is 4 feet minimum from the edge of pavement (face of gutter pan) to the bike lane stripe on curb and gutter roadways. Greater bike lane widths (5 feet Minimum) are required where substantial truck traffic is present, Transit Buses are present, or where posted speeds exceed 40* mph. Where motor vehicle traffic volume is high or substantial truck, bus or recreational vehicle traffic is present or speeds warrant, 6 feet minimum is appropriate to the bike lane stripe from the face of curb. FIGURE A(1)-1-2,(1), depicts a bike lane along the outer portion of an urban curbed street where parking is prohibited.

* Rev. 7/18

- Drainage inlets and utility covers that extend into the bike lane cause bicyclists to swerve, and reduce the usable width of the lane. Therefore, where these structures exist, the bike lane width may need to be increased accordingly. Drainage grates shall be placed perpendicular to the direction of travel and the gaps between the openings and its frame shall not be greater than 1 inch. Grates shall be within 0.25 inch of the road surface. If grates have elongated openings, they shall be placed so that the long dimension of the opening is perpendicular to the dominant direction of travel.

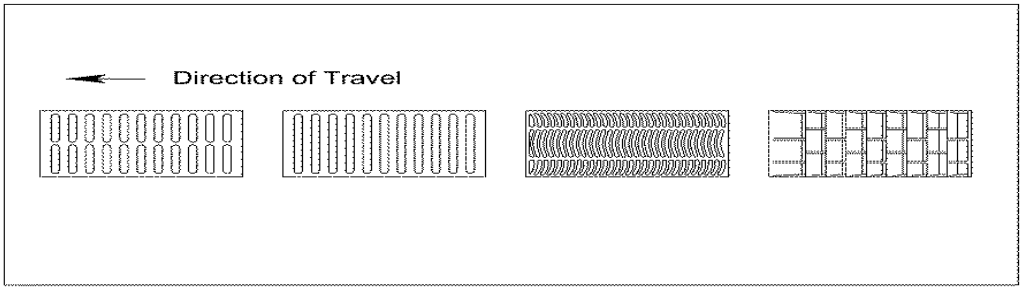

- Bike Lanes and Turning Lanes

  Bike lanes complicate bicycle and motor vehicle turning movements at intersections. It is preferable to continue the bike lane through the intersection. For example, locations where a bike lane approaches an intersection the bike lane is to be a minimum of 5 feet wide and continue parallel to the left of a right turn lane. See FIGURE A(1)-1-3 below.

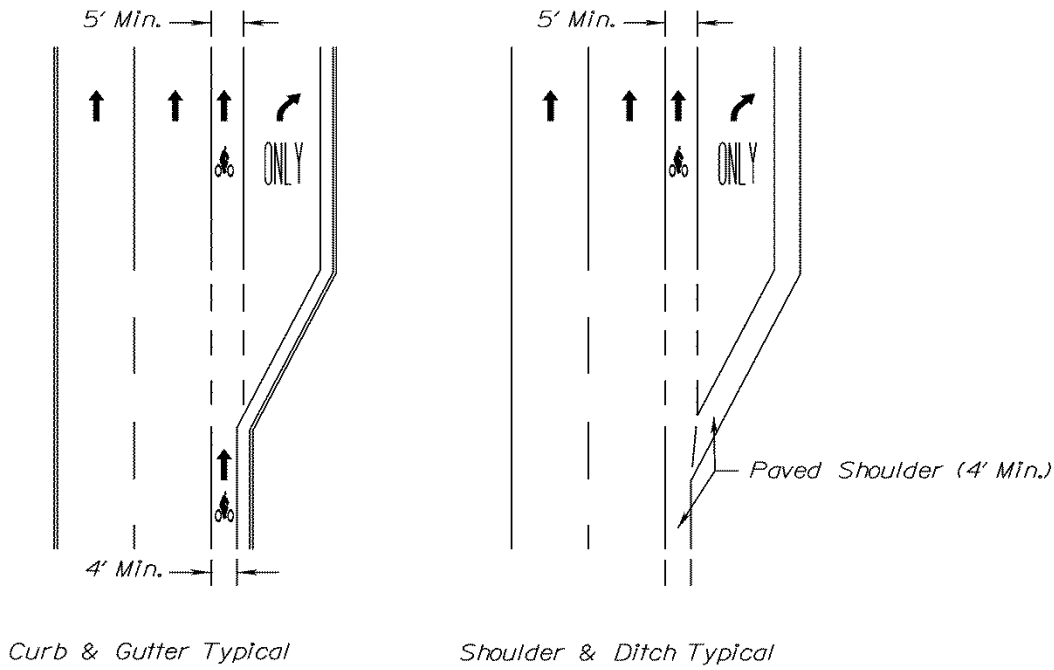

FIGURE A(1)-1-3 RIGHT-TURN-ONLY LANE

- Bike Lanes Approaching Right-Turn-Only Lanes

  NOTES: For other intersection situations see the AASHTO *Guide for the Development of Bicycle Facilities*. For current typical bicycle lane pavement markings see VDOT *Road and Bridge Standards, Section 1300*.

  Delineating (signing or marking) bike lanes within the limits of a required paved shoulder area is not permitted.*

  4 feet minimum paved shoulder is required to be considered a bicycle accommodation.

  FIGURE A(1)-1-3 presents a treatment for pavement markings where a bike lane approaches a motorist right-turn-only lane. The design of bike lanes should include appropriate signing at intersections to warn of conflicts. The approach shoulder width should be provided through the intersection, where feasible, to accommodate right turning bicyclists or bicyclists who prefer to use crosswalks to negotiate the intersection. The approach paved shoulder width should also continue parallel to the left of the right-turn lane, where feasible, to accommodate bicyclists continuing through the intersection.

* Rev. 7/17

- Bicycle Facilities Through Interchange Areas

  Turning roadways provided for interchange ramp ingress and egress often require bicyclists to perform merging, weaving or crossing maneuvers with other vehicles. These conflict points are made challenging when a wide disparity in speed exists between traffic on the ramp and bicycle traffic crossing the ramp, and when grade separations create significant profile gradients. If a bike lane or route must traverse an interchange area, these intersection or conflict points should be designed to limit the conflict areas or to eliminate unnecessary uncontrolled ramp connections to urban roadways. For more information, see ITE *Recommended Design Guidelines to Accommodate Pedestrians and Bicyclists at Interchanges,* which can be purchased from ITE.

BUFFERED BIKE LANES*

Bike lanes with horizontal separation (i.e. additional pavement markings, such as a painted buffer), but without vertical separation between the bike lane and vehicle lane and/or parking lane. See FHWA Separated Bike Lane Planning and Design Guide and NACTO Urban Bikeway Design Guide for design criteria for one-way and two-way facilities.

SEPARATED BIKE LANES

A separated bike lane is an exclusive facility for bicyclists that is located within or directly adjacent to the roadway and that is physically separated from motor vehicle traffic with a vertical element. Separated bike lanes are differentiated from standard and buffered bike lanes by the vertical element. They are differentiated from shared use paths (and side paths) by their more proximate relationship to the adjacent roadway and the fact that they are bike-only facilities. Separated bike lanes are also sometimes called "cycle tracks" or "protected bike lanes."

Within the common elements of separated bike lanes - dedicated space for cyclists that is separated from motor vehicle travel and parking lanes - practitioners have flexibility in choosing specific design elements. Separated bike lanes can operate as one-way or two-way facilities; their designs can integrate with turning automobile traffic at intersections or can be more fully separated; they can be designed at roadway grade, at sidewalk grade or at an intermediate grade; and they can be separated from the adjacent roadway or sidewalk with a variety of treatments including but not limited to on-street parking, raised curbs or medians, bollards, landscaping, or planters. For additional information see FHWA "*Separated Bike Lane Planning and Design Guide*" and NACTO *Urban Bikeway Design Guide.*

* Rev. 1/20

SHARED USE PATHS

Shared use paths are facilities physically separated from motorized vehicular traffic by an open space (buffer) or barrier and either within the highway right of way or within an independent right of way. Users are non-motorized and may include bicyclists, inline skaters, roller skaters, wheelchair users (both non-motorized and motorized) and pedestrians including walkers, runners, and people with baby strollers and people walking dogs. Shared use paths are most commonly designed for two-way travel, and the following guidance assumes a two-way facility is planned unless otherwise stated. See FIGURE A(1)-1-5 for cross section of two-way shared use path. When paths are planned, it is desirable to provide paths on both sides of the roadway to decrease the likelihood of children crossing the road. Pavement design for shared use paths are recommended by the Materials Division.

Care should be taken not to use shared use path and trail interchangeably because they have distinctly different design guidelines.

- Separation Between Shared Use Paths and Roadways

  Shoulder and Ditch Typical Section:

  When two directional shared use paths are located adjacent to a roadway, wide separation between a shared use path and the adjacent highway is desirable to demonstrate to both the bicyclist and the motorist that the path functions as an independent facility for bicyclists and others. On shoulder and ditch typical sections shared use paths should be placed behind the ditch in a manner that will be compatible with the roadway if the roadway is converted to a curb and/or curb and gutter typical section.

  When this is not possible and the distance between the outside edge of the graded shoulder and the shared use path is less than 5 feet, a suitable physical barrier is required. A suitable physical barrier is defined as dense shrubbery, railing or chain link fence. Such barriers serve both to prevent path users from making unwanted movements between the path and the highway shoulder and to reinforce the concept that the path is an independent facility. Where used, the barrier should be a minimum of 42 inches high (including on structures)[*], to prevent bicyclists from toppling over it. A barrier between a shared use path and adjacent highway should not impair sight distance at intersections, and should be designed to not be a hazard to motorists or bicyclist.

[*] Rev. 7/18

Curb and/or Curb and Gutter Typical Sections:

For curb and/or curb and gutter streets, the separation from the face of the curb to the edge of the shared use path shall be a minimum of 8 feet in order to provide the minimum lateral offset distance for signs to both the roadway and the shared use path users in accordance with MUTCD Part 2 and part 9. If signs are required on the outside of the shared use path due to horizontal and vertical grade changes then a minimum of 6.5' of right of way from the edge of the path shall be provided. If signs are not required, a minimum 3' of right of way shall be provided. See FIGURE A(1)-1-4.

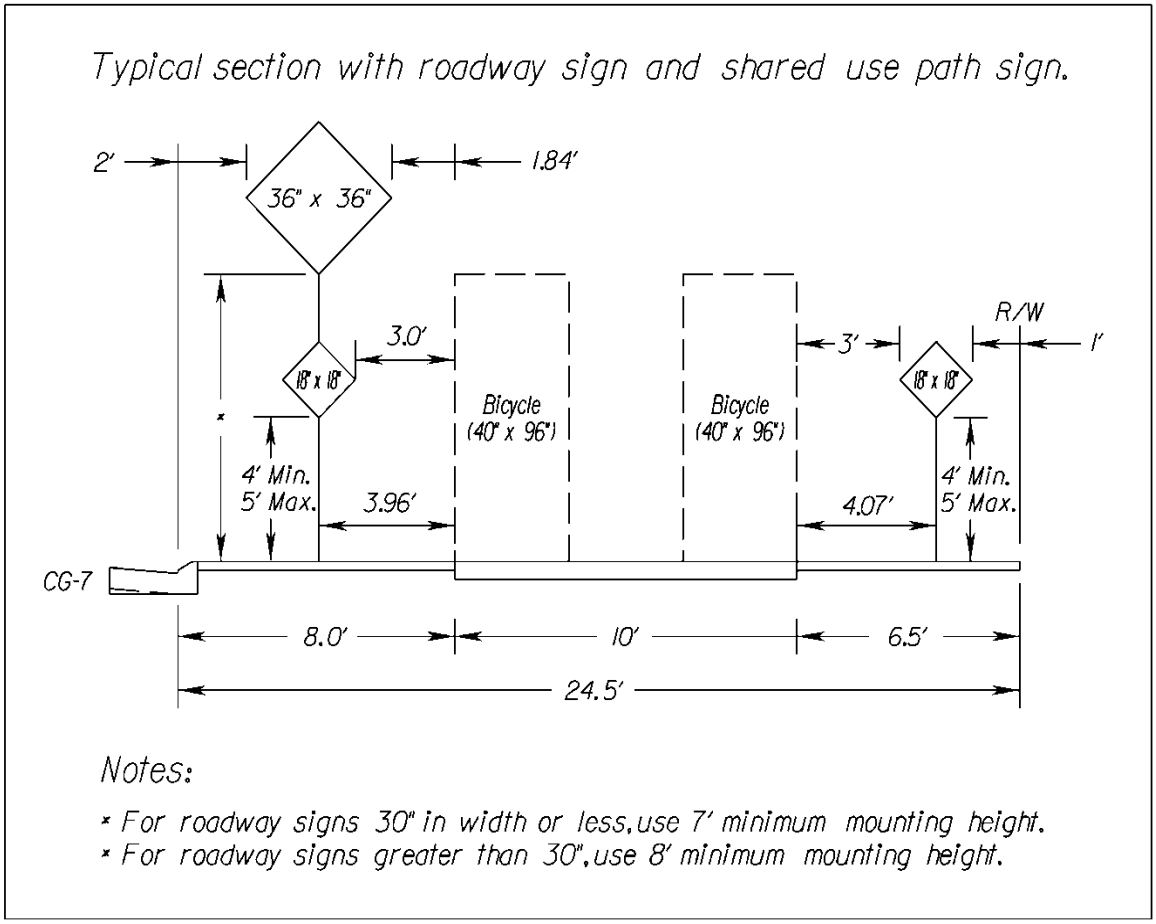

FIGURE A(1)-1-4

TYPICAL SECTION OF SHARED USE PATH WITH ROADWAY SIGNS AND SHARED USE PATH SIGNS

- Separation between Shared Use Path and Equestrian Trail

Horses can be startled easily and may act unpredictably if they perceive approaching bicyclists as a danger. Measures to mitigate bicyclist-equestrian conflicts include provision of separate bridle paths, maintenance of adequate sight lines so that bicycles and equestrians are able to see each other well in advance, and signing that clarifies appropriate passing techniques and yielding responsibilities. Along paths with high to moderate use, the separate paved and unpaved treads should be divided by at least a 6 ft. wide vegetation buffer or barrier.*

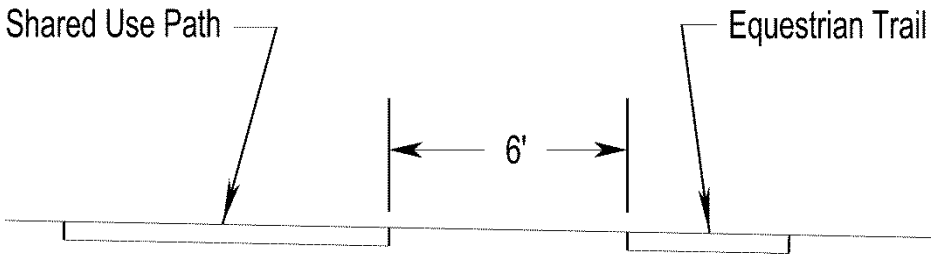

Source: AASHTO, *Guide for the Development of Bicycle Facilities*, 2012

* Rev. 1/15

Two-Directional Shared Use Path*

The paved width and the operating width required for a shared use path are primary design considerations. The minimum paved width for a two-directional shared use path is 10 feet. A minimum 2 foot wide graded area with a maximum 6:1 slope, shall be maintained adjacent to both sides of the path. A minimum 3 foot clearance shall be maintained from the edge of the path to signs, trees, poles, walls, fences, railing, guardrail, or other lateral obstructions. See FIGURE A(1)-1-5.

Under certain conditions it may be necessary to increase the width of a shared use path to 11 feet, or even 14 feet, due to substantial use by bicycles, joggers, skaters and pedestrians, use by large maintenance vehicles, and steep grades. However, in rare instances, a reduced width of 8 feet may be used. This reduced width may be used only where the following conditions prevail;

(1) Bicycle traffic is expected to be low, even on peak days or during peak hours.
(2) Pedestrian use of the facility is not expected to be more than occasional.
(3) There will be good horizontal and vertical alignment providing safe and frequent passing opportunities, and
(4) During normal maintenance activities the path will not be subjected to maintenance vehicle loading conditions that would cause pavement edge damage.

In addition, a path width of 8 ft. may be used for a short distance due to a physical constraint such as an environmental feature, bridge abutment, utility structure, fence and such. Warning signs that indicate the path narrows (W5-4a), per the *MUTCD* shall be posted in each direction at this location(s). When a path is less than 10 ft. wide a Design Waiver is required.

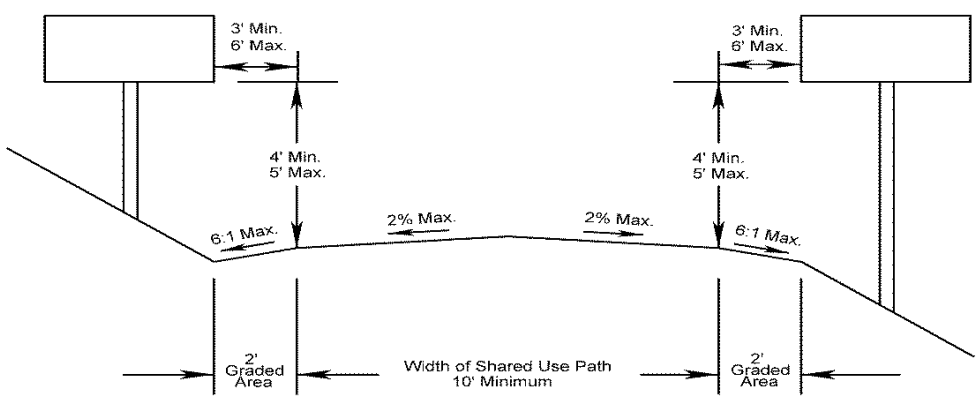

FIGURE A(1)-1-5

CROSS SECTION OF TWO-WAY SHARED USE PATH

* Rev. 1/17

One-Directional Shared Use Path

The minimum width of a one-directional shared use path is 6 feet. A one-way path would rarely be designed and only in a special situation. It should be recognized that one-way paths often would be used as two-way facilities unless effective measures are taken to assure one-way operation. Without such enforcement, it should be assumed that shared use paths would be used as two-way facilities by both pedestrians and bicyclists and designed accordingly. A minimum 2 foot wide graded area with a maximum 6:1 slope, shall be maintained adjacent to both sides of the path. A minimum 3 foot clearance shall be maintained from the edge of the path to signs, trees, poles, walls, fences, railing, guardrail, or other lateral obstructions. See FIGURE A(1)-1-5.

Physical Barrier Applies to Both One-Directional & Two-Directional Shared Use Paths

Where the path is adjacent to parallel water hazard, other obvious hazard or downward slope of 3:1 or steeper, a minimum 5 foot wide separation from the edge of the path pavement to the top of slope is required. When the separation from the edge of the shared use path to the top of the slope is less than 5 feet, a physical barrier such as railing (HR-1, Type III) or chain link fence is required in the following situations:

- Slopes 2:1 or steeper, with a drop of 4 feet or greater
- Slopes 3:1 or steeper, with a drop of 6 feet or greater
- Slopes 3:1 or steeper, adjacent to a parallel water hazard (greater than 2 feet deep) or other obvious hazard

Note: When a shared use path is constructed adjacent to a retaining wall or a structure with a drop-off of 1 foot or more, a railing or chain link fence 42 inch minimum* is required.

Note: When a physical barrier such as railing (HR-1, Type III) or chain link fence (FE-CL) is required, contact the Location and Design Standards and Special Design Section for details. Also see VDOT *Road and Bridge Standards.*

The physical barrier, railing (HR-1 Type III) or chain link fence (FE-CL) shall begin prior to, and extend beyond the area of need. The lateral offset of the physical barrier shall be 3 feet from the edge of the shared use path. The ends of the physical barrier shall be flared away from the edge of the shared use path.

When railing or fence is used to discourage shared use path users from venturing off the path or onto adjacent property the design can include two or four horizontal members with vertical members spaced frequently enough to provide the needed structural support and in accordance with applicable building codes. Berms and/or vegetation can also be used to serve this function. The location of the railing or fence in relationship to the shared use path shall be the same as the location of physical barrier mentioned above.

See FIGURE A(1)-1-6 PHYSICAL BARRIER FOR SHARED-USE PATH

---

* Rev. 7/18

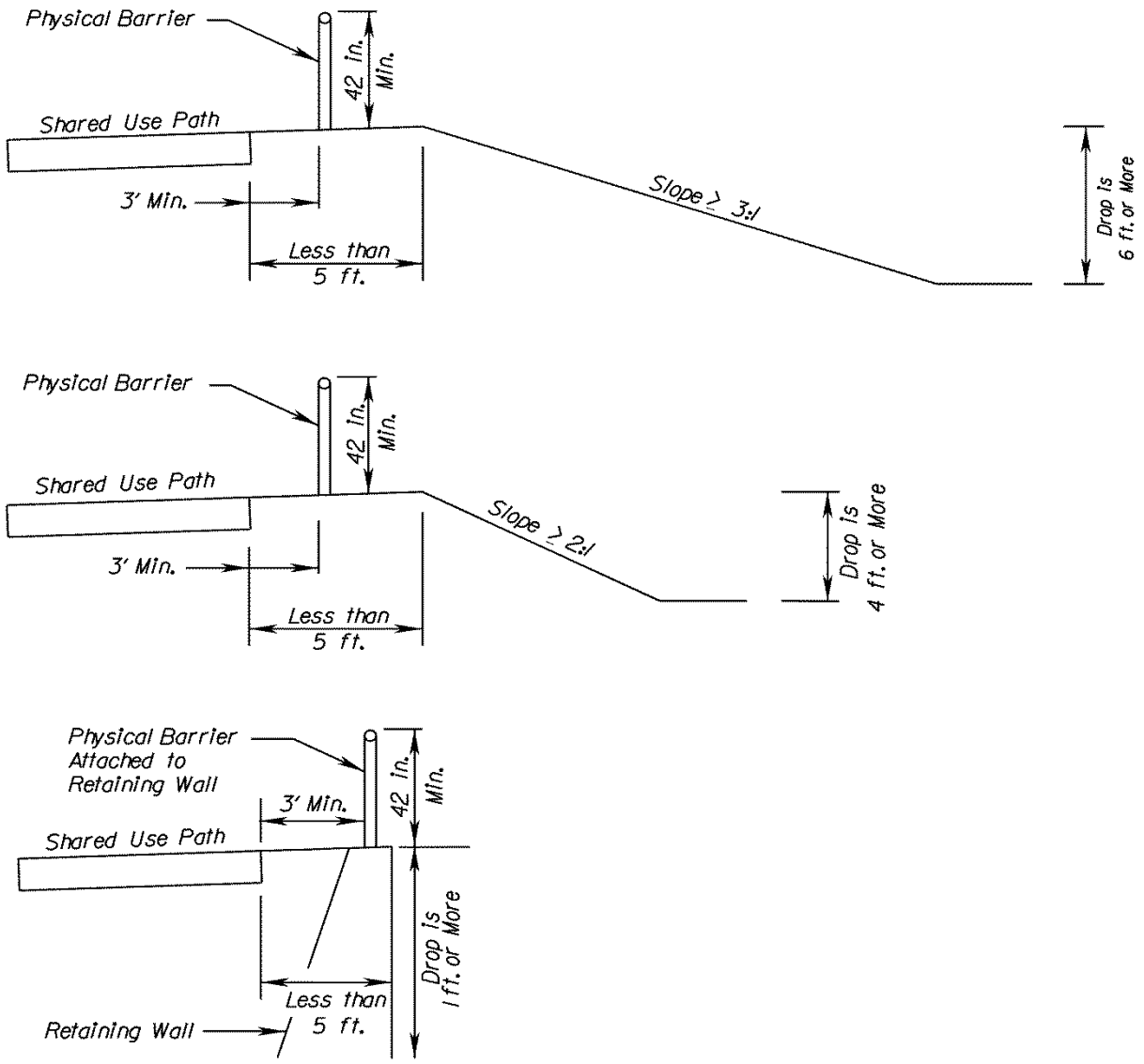

FIGURE A(1)-1-6

PHYSICAL BARRIER FOR SHARED-USE PATH

- Vertical Clearance

  The vertical clearance from the shared use path to the bottom of any sign or overhanging vegetation (Trees) shall be a minimum of 8 feet in accordance with the *MUTCD*, Part 9 and AASHTO's *Guide for the Development of Bicycle Facilities*, 2012 respectively. However, vertical clearance may need to be greater to permit passage of maintenance and emergency vehicles. For underpasses, tunnels and bridges a minimum vertical clearance of 10 feet is desirable. *

- Design Speed

  Shared use paths should be designed for a selected speed that is at least as high as the preferred speed of the faster bicyclists. Design speeds range from 12 mph to 30 mph, as shown in TABLE A(1)-1-3. However, in general a minimum design speed 18 mph should be used. When a downgrade of 6% or greater exist, or where strong prevailing tailwinds exist, a maximum design speed of 30 mph shall be used.

- Horizontal Alignment

  Most shared use paths built in the United States must also meet the requirements of the Americans with Disabilities Act. ADA guidelines require that cross slopes not exceed 2% to avoid the severe difficulties that greater cross slopes can create for people using wheelchairs. Thus, for shared use paths, the maximum superelevation rate will be 2%. When transitioning a 2% superelevation, a minimum 25 foot transition distance should be provided between the end and beginning of consecutive and Reversing horizontal curves.

  The coefficient of friction depends upon speed; surface type, roughness, and condition; tire type and condition; and whether the surface is wet or dry. Extrapolating from values used in highway design, design friction factors for paved shared use paths can be assumed to vary from 0.34 at 6 mph to 0.21 at 30 mph.

* Rev. 7/18

Based upon various design speeds of 18 to 30 mph and a maximum lean angle of 20°, minimum radii of curvature for Paved Shared Use Paths can be selected from TABLE A(1)-1-7:

Design Speed (V) (mph)	Minimum Radius (feet)
12	27
14	36
16	47
18	60
20	74
25	115
30	166

TABLE A)1)-1-3

MINIMUM RADII FOR PAVED SHARED USE PATHS BASED ON 20° LEAN ANGLE
Source: AASHTO – Guide For The Development Of Bicycle Facilities.

- Grade

Grades on shared use paths should be kept to a minimum, especially on long inclines. Grades greater than 5 percent are undesirable because the ascents are difficult for many bicyclists and wheelchair users to climb and the descents cause some bicyclists and wheelchair users to exceed the speeds at which they are competent or comfortable. The maximum grade of a shared use path adjacent to a roadway should be 5 percent, but the grade shall generally match the grade of the adjacent roadway. Where a shared use path runs adjacent to the roadway, grades may exceed 5 percent but shall be less than or equal to the roadway grade.

Grades on shared use paths in independent rights of way shall be limited to 5 percent maximum.

Grades steeper than 3 percent are not practical for shared use paths with crushed stone or other unpaved surfaces for both bicycle handling and drainage erosion reasons.

In addition, because shared use paths are used by pedestrians, the allowable grades are subject to the accessibility guidelines described in the *U.S. Access Board Supplemental Notice of Public Rule Making (SNPRM)* on Shared Use Paths.

When certain conditions such as physical constraints (existing terrain or infrastructure, notable natural features, etc.) or regulatory constraints (endangered species, the environment, etc.) may prevent full compliance with the 5 percent maximum grade refer to R302.5.4 and 302.5.5 below.

R302.5 Grade. The grade of pedestrian access routes shall comply with R302.5.

R302.5.1 Within Street or Highway Right-of-Way. Except as provided in R302.5.3, where pedestrian access routes are contained within a street or highway right-of-way, the grade of pedestrian access routes shall not exceed the general grade established for the adjacent street or highway.

R302.5.2 Not Within Street or Highway Right-of-Way. Where pedestrian access routes are not contained within a street or highway right-of-way, the grade of pedestrian access routes shall be 5 percent maximum.

R302.5.3 Within Pedestrian Street Crossings. Where pedestrian access routes are contained within a pedestrian street crossing, the grade of pedestrian access routes shall be 5 percent maximum.

R302.5.4 Physical Constraints. Where compliance with R302.5.1 or R302.5.2 is not practicable due to existing terrain or infrastructure, right-of-way availability, a notable natural feature, or similar existing physical constraints, compliance is required to the extent practicable.

R302.5.5 Regulatory Constraints. Where compliance with 302.5.1 or 302.5.2 is precluded by federal, state, or local laws the purpose of which is to preserve threatened or endangered species; the environment; or archaeological, cultural, historical, or significant natural features, compliance is required to the extent practicable. *

Options to mitigate excessive grades, greater than 5 percent on shared use paths due to physical and/or environmental constraints include the following:

- Use higher design speeds for horizontal and vertical curvature, stopping sight distance and other geometric features.
- When using longer grades, consider an additional 4 to 6 feet of width to permit slower bicyclists to dismount and walk uphill, and to provide more maneuvering space for fast downhill bicyclists.
- For long downgrades, and/or downgrades not readily apparent to approaching cyclists
    - Install hill warning signs for bicyclists (W7-5) and advisory speed plaque, if appropriate, per the *MUTCD*.
    - Provide signage that alerts path users to the maximum percent of grade as shown in the *MUTCD*.
- Exceed minimum horizontal clearances, recovery area, and /or install protective railing.
- If other designs are not practicable, use a series of short switchbacks to traverse the grade. If this is done, an extra 4 to 6 feet of path width is recommended to provide maneuvering space.
- Provide resting intervals with flatter grades to permit users to stop periodically and rest.

* Rev. 1/18

- Sight Distance

The following charts indicate the minimum stopping sight distance for various design speeds and grades based on a total perception and brake reaction time of 2.5 seconds and a coefficient of friction of 0.16* to account for the poor wet weather braking characteristics of many bicycles. For two-way shared use paths, the sight distance in the descending direction, that is, where "G" is negative, will control the design.

Sight Distance Descending Grade (ft.)

	0%	-1%	-2%	-3%	-4%	-5%
12 mph	74	76	78	80	84	87
14 mph	92	95	98	102	106	111
16 mph	112	116	120	124	130	136
18 mph	133	138	143	149	156	164
20 mph	157	162	169	176	185	195
25 mph	212	231	241	252	265	281
30 mph	298	310	324	341	360	383

TABLE A(1)-1-4

MINIMUM STOPPING SIGHT DISTANCE (FT.) DESCENDING GRADE

Sight Distance Ascending Grade (ft.)

	0%	1%	2%	3%	4%	5%
12 mph	74	72	70	69	68	67
14 mph	92	90	88	86	84	82
16 mph	121	109	106	104	101	99
18 mph	133	130	126	123	120	117
20 mph	157	152	147	144	140	137
25 mph	212	214	207	201	196	191
30 mph	298	287	277	268	260	253

TABLE A(1)-1-5

MINIMUM STOPPING SIGHT DISTANCE (FT.) ASCENDING GRADE

$$S = \frac{V^2}{30\,(f \pm G)} + 3.67\,V$$

Where: S = stopping sight distance (feet)
V = velocity (mph)
F = coefficient of friction (use 0.16)
G = grade (ft/ft) (rise/run)

Source: AASHTO – *Guide for the Development of Bicycle Facilities*.

* Rev. 1/13

TABLE A(1)-1-6 indicates the minimum length of vertical curve necessary to provide minimum stopping sight distance at various speeds on crest vertical curves. The eye height of the bicyclist is assumed to be 4.5 feet and the object height is assumed to be 0 inches to recognize that impediments to bicycle travel exist at pavement level.

A	"S" = Stopping Sight Distance (feet)														
(%)	**20**	**40**	**60**	**80**	**100**	**120**	**140**	**160**	**180**	**200**	**220**	**240**	**260**	**280**	**300**
2												30	70	110	150
3								20	60	100	140	180	220	260	300
4						15	55	95	135	175	215	256	300	348	400
5					20	60	100	140	180	222	269	320	376	436	500
6				10	50	90	130	171	216	267	323	384	451	523	600
7				31	71	111	152	199	252	311	376	448	526	610	700
8			8	48	88	128	174	228	288	356	430	512	601	697	800
9			20	60	100	144	196	256	324	400	484	576	676	784	900
10			30	70	111	160	218	284	360	444	538	640	751	871	1000
11			38	78	122	176	240	313	396	489	592	704	826	958	1100
12		5	45	85	133	192	261	341	432	533	645	768	901	1045	1200
13		11	51	92	144	208	283	370	468	578	699	832	976	1132	1300
14		16	56	100	156	224	305	398	504	622	753	896	1052	1220	1400
15		20	60	107	167	240	327	427	540	667	807	960	1127	1307	1500
16		24	64	114	178	256	348	455	576	711	860	1024	1202	1394	1600
17		27	68	121	189	272	370	484	612	756	914	1088	1277	1481	1700
18		30	72	128	200	288	392	512	648	800	968	1152	1352	1568	1800
19		33	76	135	211	304	414	540	684	844	1022	1216	1427	1655	1900
20		35	80	142	222	320	436	569	720	889	1076	1280	1502	1742	2000
21		37	84	149	233	336	457	597	756	933	1129	1344	1577	1829	2100
22		39	88	156	244	352	479	626	792	978	1183	1408	1652	1916	2200
23		41	92	164	256	368	501	654	828	1022	1237	1472	1728	2004	2300
24	3	43	96	171	267	384	523	683	864	1067	1291	1536	1803	2091	2400
25	4	44	100	178	278	400	544	711	900	1111	1344	1600	1878	2178	2500

Source: *AASHTO* – *Guide for the Development of Bicycle Facilities*.

Heavy line represents S = L

when S > L $L = 2S - \frac{900}{A}$

when S < L $L = AS^2/900$

Height of cyclist eye – 4.5 feet

Height of object – 0 feet

L = Minimum Length of Vertical Curve (feet)

A = Algebraic Grade Difference (%)

S = Stopping Sight Distance (feet)

Minimum Length of Vertical Curve = 3 feet

TABLE A(1)-1-6

MINIMUM LENGTH OF CREST VERTICAL CURVE (L) BASED ON STOPPING SIGHT DISTANCE

FIGURE A(1)-1-7 and TABLE A(1)-1-7 indicate the minimum clearance that should be used to line of sight obstructions for horizontal curves. The lateral clearance is obtained from the stopping sight distance and the proposed horizontal radius of curvature. The stopping sight distance is obtained from TABLE A(1)-1-5 and TABLE A(1)-1-6.

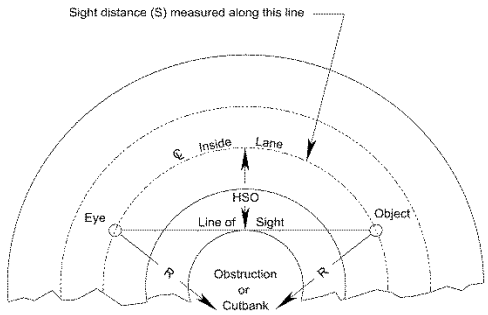

S = Sight distance in feet.

R = Radius of ℄ inside lane is feet.

HSO = Distance from ℄ inside lane in feet.

Angle is expressed in degrees

$$HSO = R\left[1-\cos\left(\frac{28.65\ S}{R}\right)\right]$$

$$S = \frac{R}{28.65}\left[\cos^{-1}\left(\frac{R-M}{R}\right)\right]$$

Formula applies only when S is equal to or less than length of curve.
Line of sight is 2.3 feet above centerline of inside lane at point of obstruction.

FIGURE A(1)-1-7

R	"S" = Stopping Sight Distance (feet)														
(feet)	20	40	60	80	100	120	140	160	180	200	220	240	260	280	300
25	2.0	7.6	15.9												
50	1.0	3.9	8.7	15.2	23.0	31.9	41.5								
75	0.7	2.7	5.9	10.4	16.1	22.8	30.4	38.8	47.8	57.4	67.2				
95	0.5	2.1	4.7	8.3	12.9	18.3	24.7	31.8	39.5	48.0	56.9	66.3	75.9	85.8	
125	0.4	1.6	3.6	6.3	9.9	14.1	19.1	24.7	31.0	37.9	45.4	53.5	61.7	70.6	79.7
155	0.3	1.3	2.9	5.1	8.0	11.5	15.5	20.2	25.4	31.2	37.4	44.2	51.4	59.1	67.1
175	0.3	1.1	2.6	4.6	7.1	10.2	13.8	18.0	22.6	27.8	33.5	39.6	46.1	53.1	60.5
200	0.3	1.0	2.2	4.0	6.2	8.9	12.1	15.8	19.9	24.5	29.5	34.9	40.8	47.0	53.7
225	0.2	0.9	2.0	3.5	5.5	8.0	10.8	14.1	17.8	21.9	26.4	31.3	36.5	42.2	48.2
250	0.2	0.8	1.8	3.2	5.0	7.2	9.7	12.7	16.0	19.7	23.8	28.3	33.1	38.2	43.7
275	0.2	0.7	1.6	2.9	4.5	6.5	8.9	11.6	14.6	18.0	21.7	25.8	30.2	34.9	39.9
300	0.2	0.7	1.5	2.7	4.2	6.0	8.1	10.6	13.4	16.5	19.9	23.7	27.7	32.1	36.7
350	0.1	0.6	1.3	2.3	3.6	5.1	7.0	9.1	11.5	14.2	17.1	20.4	23.9	27.6	31.7
390	0.1	0.5	1.2	2.1	3.2	4.6	6.3	8.2	10.3	12.8	15.4	18.3	21.5	24.9	28.5
500	0.1	0.4	0.9	1.6	2.5	3.6	4.9	6.4	8.1	10.0	12.1	14.3	16.8	19.5	22.3
565		0.4	0.8	1.4	2.2	3.2	4.3	5.7	7.2	8.8	10.7	12.7	14.9	17.3	19.8
600		0.3	0.8	1.3	2.1	3.0	4.1	5.3	6.7	8.3	10.1	12.0	14.0	16.3	18.7
700		0.3	0.6	1.1	1.8	2.6	3.5	4.6	5.8	7.1	8.6	10.3	12.0	14.0	16.0
800		0.3	0.6	1.0	1.6	2.2	3.1	4.0	5.1	6.2	7.6	9.0	10.5	12.2	14.0
900		0.2	0.5	0.9	1.4	2.0	2.7	3.6	4.5	5.6	6.7	8.0	9.4	10.9	12.5
1000		0.2	0.5	0.8	1.3	1.8	2.4	3.2	4.0	5.0	6.0	7.2	8.4	9.8	11.2

Source: *AASHTO – Guide For The Development of Bicycle Facilities*

TABLE A(1)-1-11
MINIMUM LATERAL CLEARANCE FOR HORIZONTAL CURVES

Bicyclists frequently ride side-by-side on shared use paths, and on narrow paths bicyclists have a tendency to ride near the middle of the path. For these reasons, and because of the higher potential for bicycle crashes, lateral clearances on horizontal curves should be calculated based on the sum of the stopping sight distances for bicyclists traveling in opposite directions around the curve. Where this is not possible or feasible, consideration should be given to widening the path through the curve, installing a yellow center line stripe, installing a "Curve Ahead" warning sign in accordance with the *MUTCD*, or some combination of these alternatives.

- Shared Use* Path and Roadway or Entrance Intersections

Intersections between shared use paths and roadways are often the most critical issue in shared use path design. Due to the potential conflicts at these junctions, careful design is of paramount importance to the safety of path users and motorists. Each intersection is unique, and will require sound engineering judgment on the part of the designer as to the appropriate solution. Shared use paths should cross roadways as close to an intersecting road as practical, however, in no case shall the crossing be closer than 5 feet from the edge of the parallel roadway. As the shared use path approaches the crossing it should be aligned with the destination of the crossing on the other side of the road. The path crossing should also be perpendicular (or nearly so) to the roadway or entrance being crossed. Sight distance should be evaluated and sound engineering judgment must be used in locating the shared use path crossings. There may be situations, such as low traffic volumes where the shared use path crossing should be located further from the intersection.

When a shared use path intersects a roadway or entrance on a shoulder and ditch typical section, the shared use path should slope to a relatively level (1%± slope) area to the roadway or entrance elevation The level area shall have a Detectable Warning Surface extending the full width of the shared use path and shall be labeled on the plans as Detectable Warning Surface Required. See FIGURE A(1)-1-8 below for a Shoulder and Ditch Typical Section.

When a shared use path intersects a roadway or entrance on a curb and gutter or curb only typical section a St'd CG-12 Type B shall be called out where the shared use path intersects the roadway or entrance. See FIGURE A(1)-1-9 below for a Curb and Gutter or Curb Typical Section.

* Rev. 1/18

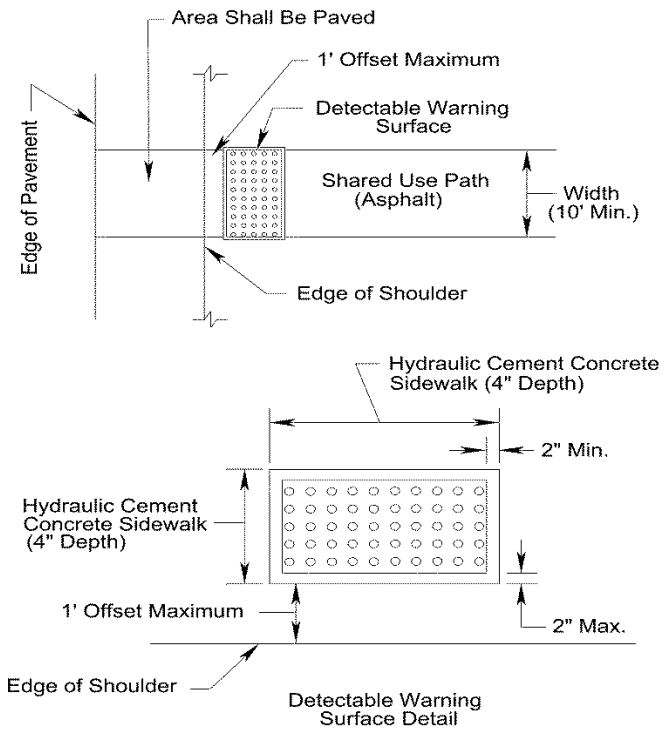

Not To Scale

Shoulder Typical

FIGURE A(1)-1-8

DETECTABLE WARNING SURFACE FOR SHARED-USE PATH WITH SHOULDER*

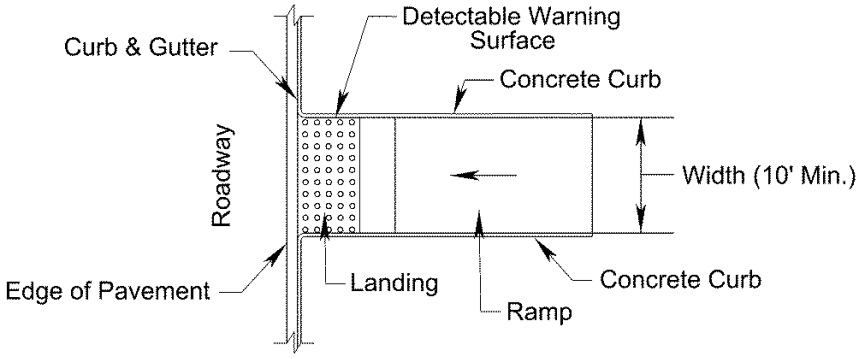

Note: Ramp and Landing to be constructed of Hydraulic Cement Concrete Sidewalk (4" Depth)

Curb & Gutter Typical

(St'd. CG-12, Type B with Buffer Strip)

Not To Scale

FIGURE A(1)-1-9

ST'D. CG-12 TYPE B FOR SHARED-USE PATH WITH CURB & GUTTER

* Rev. 7/19

If a sidewalk intersects a shared use path, then the sidewalk shall* also slope to the same relatively level area in order to tie in to the shared use path.

Where a shared use path crosses an **unpaved** roadway or entrance, the unpaved roadway or entrance shall be paved a minimum of 20 feet on each side of the shared-use path to reduce the amount of gravel scattered onto or along the shared use path by motor vehicles. The pavement structure of the shared use path at the crossing shall be adequate to support the expected vehicle loading at that location. At a minimum, the pavement structure at the crossing shall be the same as the shared use path pavement structure.

- Signing and Marking

  Adequate signing and marking are essential on shared use paths, especially to alert bicyclists to potential conflicts and to convey regulatory messages to both bicyclists and motorists at highway intersections. In addition, guide signing, such as to indicate directions, destinations, distances, route numbers and names of crossing streets, should be used in the same manner as they are used on highways. In general, uniform application of traffic control devices, as described in the *MUTCD*, provides minimum traffic control measures which should be applied.

- Pavement Structure

  Hard, all weather pavement surfaces (such as asphalt or concrete) are preferred over those of crushed aggregate, sand, clay, or stabilized earth since these materials provide a much lower level of service and require higher maintenance.

  The pavement structure below, FIGURE A(1)-1-10, shall be used and shown on the pavement typical section sheet of the plans unless otherwise directed by the District Materials Engineer. Any additional information, such as changes in pavement depths, treatment of unsuitable materials, etc. shall be provided by the District Materials Engineer. Compaction of the asphalt concrete shall be completed by a minimum of 5 passes of a 8 ton smooth drum roller (no vibration). Asphalt density shall not be measured in accordance with the *Roads and Bridge Specifications*. This pavement structure typical section can be found in the CADD cell library under the name: Shared-Use Path Pavement Structure.

* Rev. 1/18

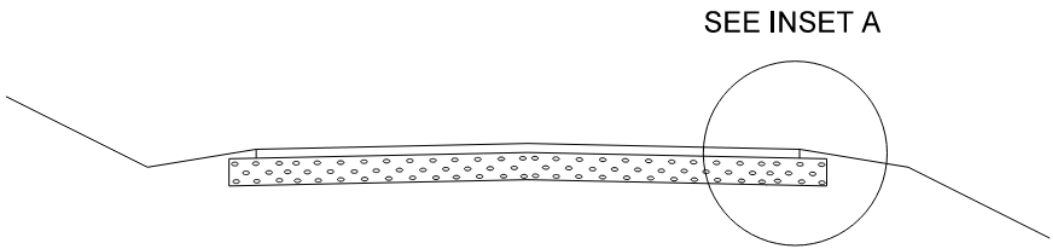

Note: For dimensions, slopes and offsets, see Appendix A (1) , Figure A(1)-1-5

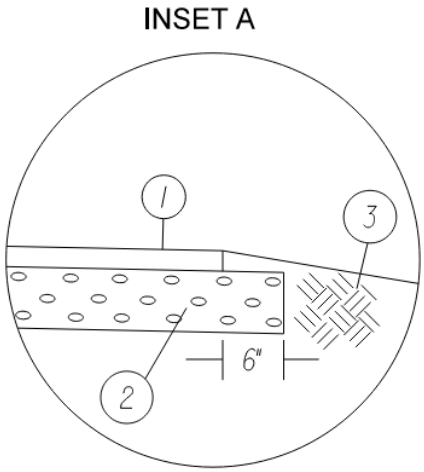

1. 2" ASPHALT CONCRETE SM-9.5A/SM-9.5AL @ approximately 220 lbs./Sq.Yds.
2. 6" AGGREGATE BASE MATERIAL TYPE I, OR II, NO. 21A OR 21B
3. REGULAR FILL MATERIAL OR NATIVE SOIL

FIGURE A(1)-1-10*

SHARED USE PATH PAVEMENT STRUCTURE

* Rev. 7/20

- Pavement Cross Slope for Drainage

  The minimum recommended pavement cross slope for shared use paths is 1 percent to provide adequate drainage. However, the cross shall not exceed 2 percent in accordance with PROWAG. Sloping in one direction instead of crowning is preferred and usually simplifies the drainage and surface construction. A smooth surface is essential to prevent water ponding and ice formation. On unpaved shared use paths, particular attention should be paid to drainage to avoid erosion.

- Lighting

  Lighting for shared use paths is important and should be considered where night usage is expected, such as paths serving college students or commuters, and at highway intersections. Lighting should also be considered through underpasses or tunnels, and when nighttime security could be an issue.

- Restriction of Motor Vehicle Traffic

  Shared use paths may need some form of physical barrier at highway intersections to prevent unauthorized motor vehicles from using the facilities. Provisions can be made for a lockable, removable (or reclining) barrier post to permit entrance by authorized vehicles.

- Railroad Crossings

  Railroad-highway grade crossings shall be at 60° to 90° degrees with the 90° degrees being the ideal crossing angle to the rails.* The greater the crossing deviates from this ideal crossing angle, the greater is the potential for a bicyclist's front wheel to be trapped in the flangeway causing loss of steering control. Consideration should be given to the crossing surface materials and to the flangeway depth and width.

- Structures

  On new structures, the minimum clear width shall be the same as the approach paved shared use path, plus the minimum 2 foot wide clear areas on both sides of the path. Carrying the clear areas across the structures provides a minimum horizontal shy distance from the railing or barrier and it provides needed maneuvering space to avoid conflicts with pedestrians and other bicyclists who are stopped on the bridge. Railings, fences, or barriers on both sides of a path on a structure shall be a minimum of 54 inches (4.5 feet) high. In situations where the structure crosses a high speed or high volume road and objects are subject to being thrown (dangerously) off the structure, it may be desirable to totally enclose the path with fencing. Totally enclosing a path may also be desirable in other areas such as a waterway crossing.

  When structures require a barrier separation between the travelway and the shared-use path see FIGURE A(1)-1-11 for transition from roadway onto bridge.

---

* Rev. 1/15

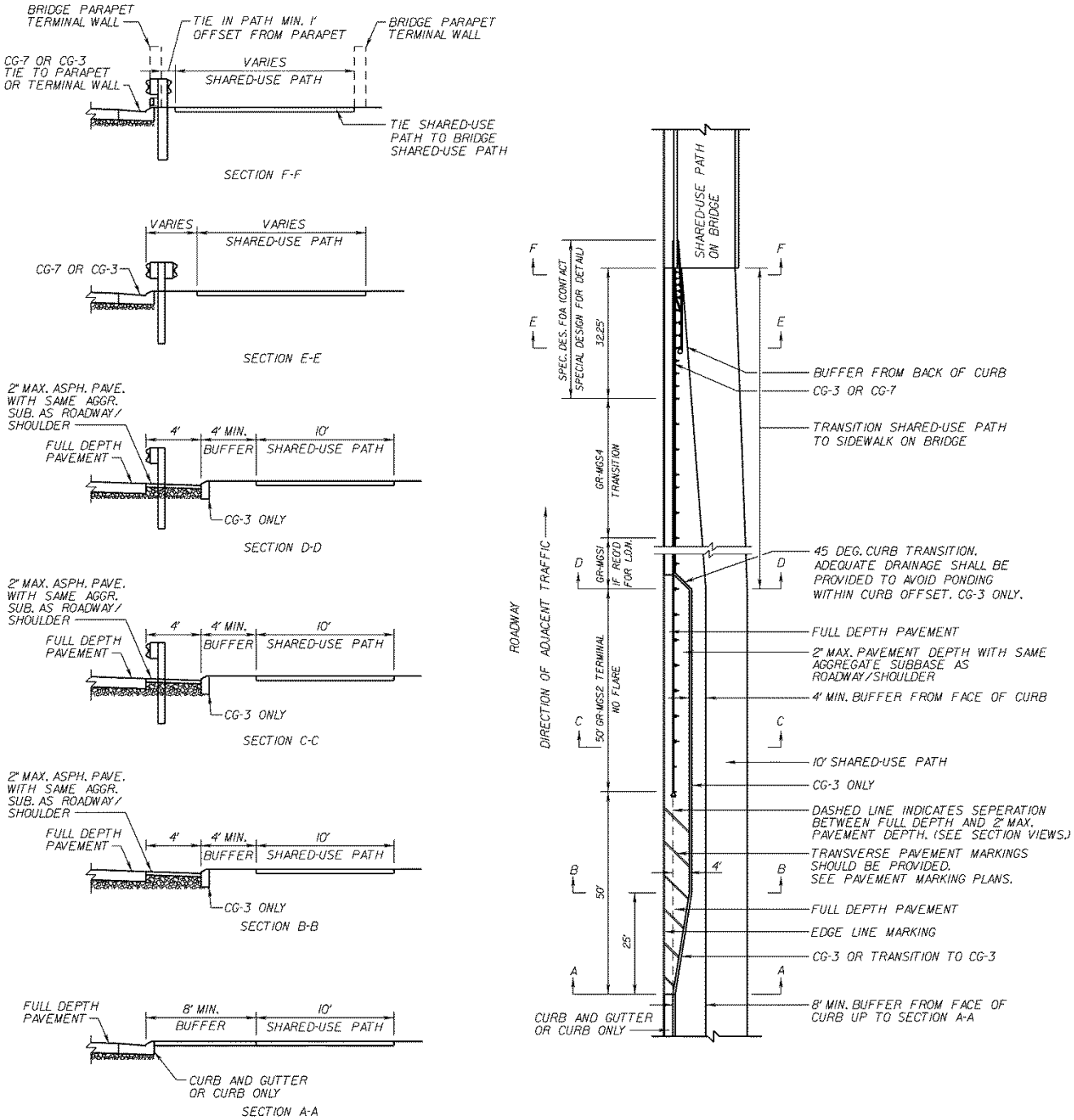

FIGURE A(1)-1-11 SHARED USE PATH TRANSITION FROM ROADWAY ONTO BRIDGE FOR DESIGN SPEEDS >45 MPH*

* Rev. 7/19

AASHTO APPROVED INTERSTATE BICYCLE ROUTES

VDOT provides signing along the designated AASHTO approved Interstate Bicycle Routes. FIGURE A(1)-1-12 shows the corridors for Interstate Bicycle Routes 1 and 76 and the counties the routes pass through. The individual county maps provide detailed location information. County maps are to be checked by the project designer to determine if their project is on a designated Interstate Bicycle Route. All proposed projects involving major construction or redevelopment along designated Interstate Bicycle Routes are to provide the necessary design features to facilitate bicycle travel in accordance with the parameters established in these guidelines. For more information see *Bicycling and Walking in Virginia*.

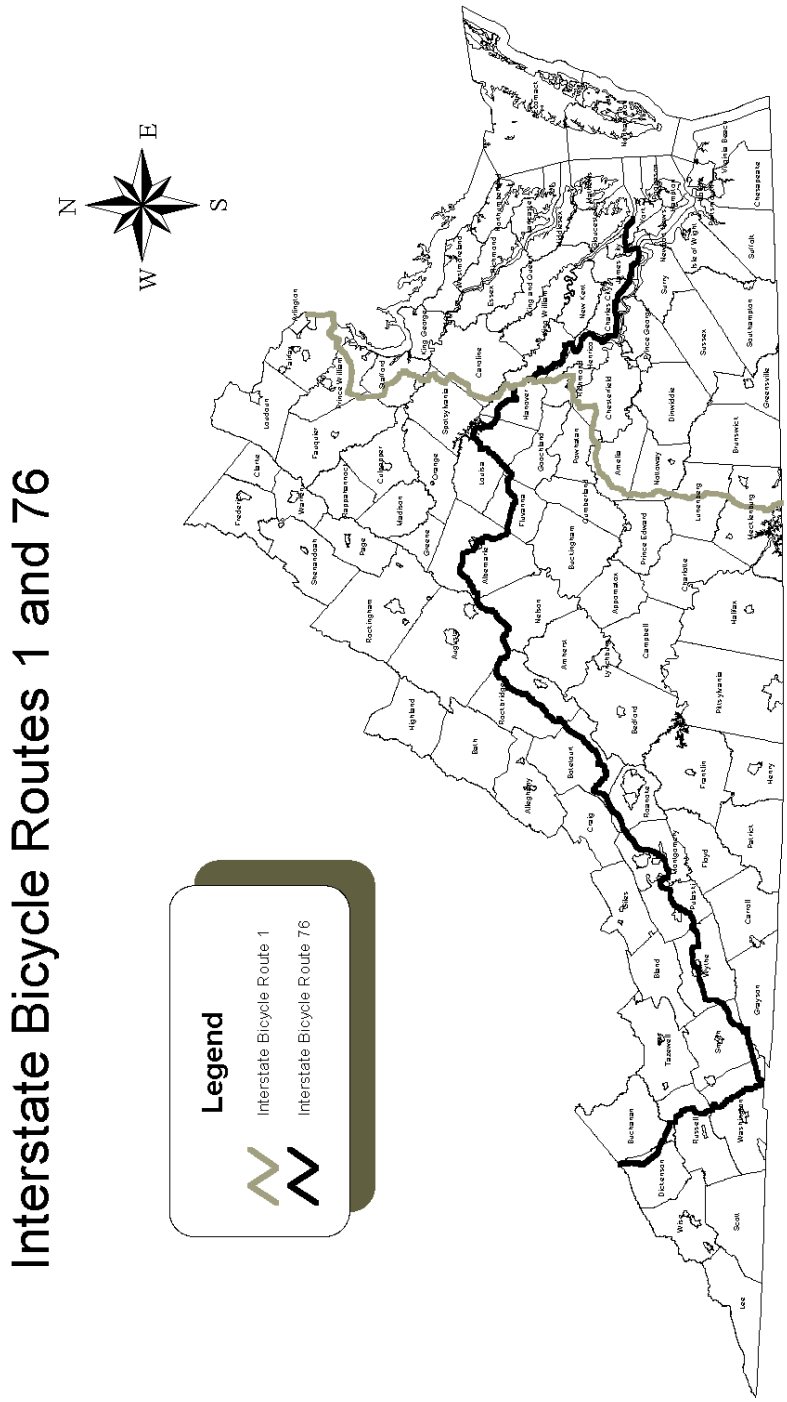

FIGURE A(1)-1-12*

* Rev. 1/11

TRAILS AND TRAILHEADS

For more information see; *A Summary of Accessibility Standards for Federal Outdoor Developed Areas - United States Access Board.* *

Trails

Trails are defined in the *Final Guidelines for Outdoor Developed Areas* as a pedestrian route developed primarily for outdoor recreational purposes. A pedestrian route developed primarily to connect elements, spaces, or facilities within a site is not a trail.

The term "Trail" means an unimproved or sometimes improved recreational facility intended for recreational use such as hiking, mountain biking or equestrians. Care should be taken not to use Share-use path and Trail interchangeably because they have distinctly different design guidelines. However, when any portion of a Trail can be constructed using Share-use path design criteria it should be and an over-look or passing area 5 feet by 5 feet shall be constructed to allow users to experience the Trail without blocking the Trail for other users.

For guidance on the design of Outdoor Recreation Access Routes, see the *Final Guidelines for Outdoor Developed Areas*, and the *DCR Greenways and Trails Toolbox.*

The scoping provisions for trails are contained in the *Final Guidelines for Outdoor Developed Areas, Section* F247. These provisions require trails to comply with the technical provisions for trails in 1017 when all the following conditions are met:

- The trail is newly constructed or altered so that the original design, function, or purpose of the trail is changed. Routine or periodic maintenance activities that are performed to return an existing trail to the condition to which the trail was originally designed are not alterations.

- The trail is designed for pedestrian use.

- The trail connects to a trailhead or to another trail that complies with the technical provisions in Section 1017.

* Rev. 1/15

The technical provisions for trails in Section1017 of the *Final Guidelines for Outdoor Developed Areas*, dated September 26, 2013, address surface in 1017.2; clear tread width in 1017.3; passing spaces in 1017.4; tread obstacles in 1017.5; openings in 1017.6; slopes in 1017.7; resting intervals in 1017.8; protruding objects in 1017.9; and trailhead signs in 1017.10.

The technical provisions are the same as in the NPRM, except as follows:

- Conditional exceptions apply to each technical provision for newly constructed and altered trails. The conditional exceptions are discussed under Conditional Exceptions.

- The exception based on situations where it is impractical to require the entire trail to comply with the technical provisions is revised. The exception is discussed under Exceptions for Trails and Beach Access Routes.

- Where concrete, asphalt, or boards are used, obstacles cannot exceed ½ inch in height and the cross slope and resting interval slope cannot exceed 1:48. These provisions are discussed under Concrete, Asphalt, or Board Surfaces.

The NPRM exceptions for openings are included in 302.3 of the ADA-ABA Accessibility Guidelines.*

Where resting intervals are provided adjacent to the trail, a turning space is required.

Provisions are added for gates and barriers constructed to control access to trails.

The scoping provisions for trails also address camping facilities, picnic facilities, viewing areas, and outdoor constructed features provided on trails. These facilities are required to comply with the applicable scoping and technical provisions for each facility, regardless of whether the trail complies with the technical provisions in 1017. Individuals with disabilities use trails that do not comply with the technical provisions of 1017 and, therefore, facilities provided on such trails are required to be accessible. Camping facilities, picnic facilities, viewing areas, and outdoor constructed features provided on trails are connected to a trail, and are not required to be connected to an outdoor recreation access route. See 1019 Conditions for Exceptions.

* Added 7/11

Trailhead*

Trailheads are defined in F106.5 as an outdoor space developed to serve as an access point to a trail. The junction of two or more trails, where no other access point is provided to the trails, is not a trailhead.

The scoping provisions for trailheads are contained in F247.3. The provisions require new signs provided at trailheads on newly constructed or altered trails to include information on the length of the trail or trail segment; surface type; typical and minimum tread width; and typical and maximum running slope and cross slope. The U.S. Forest Service currently provides this information on trailhead signs posted on certain trails in national forests.

The scoping provisions require at least 20 percent of each type of outdoor constructed feature provided within a trailhead to be accessible. The scoping provisions also require an outdoor recreation access route to connect accessible parking spaces or other site arrival points to the accessible outdoor constructed features, elements, spaces, and facilities within the trailhead.

Resources:

For guidance on the design of Outdoor Recreation Access Routes, see Section 1017 of the *Final Guidelines for Outdoor Developed Areas*, dated September 26, 2013, and the *DCR Greenways and Trails Toolbox*.

* Added 7/11

RAILS – WITH – TRAILS

"Rails-with-Trails" (RWT) describe any shared-use path or trail adjacent to an active railroad corridor. These trails are located adjacent to active rail lines ranging from a few slow-moving short-haul freight trains weekly, to high-frequency Amtrak trains traveling as fast as 140 mph. Like shared-use paths, RWT's are used by bicyclists and pedestrians. Many of the characteristics of shared-use paths are also common to RWT's. These include continuous separation from motor vehicle traffic; frequent access points; increased levels of safety and security; scenic qualities; connectivity to a variety of land uses, etc. RWT's can bring numerous benefits to communities and railroads alike. Working closely with railroad companies and other stakeholders is critical to a successful RWT. Limiting new and/or eliminating at-grade RWT crossings, separating trails back as far as possible from tracks and providing physical separation through fencing, vertical distance, vegetation and/or drainage ditches can help create a well-designed trail. See FIGURE A(1)-1-13 and TABLE A(1)-1-8* for minimum separation distance between active rails and paths (RWT).

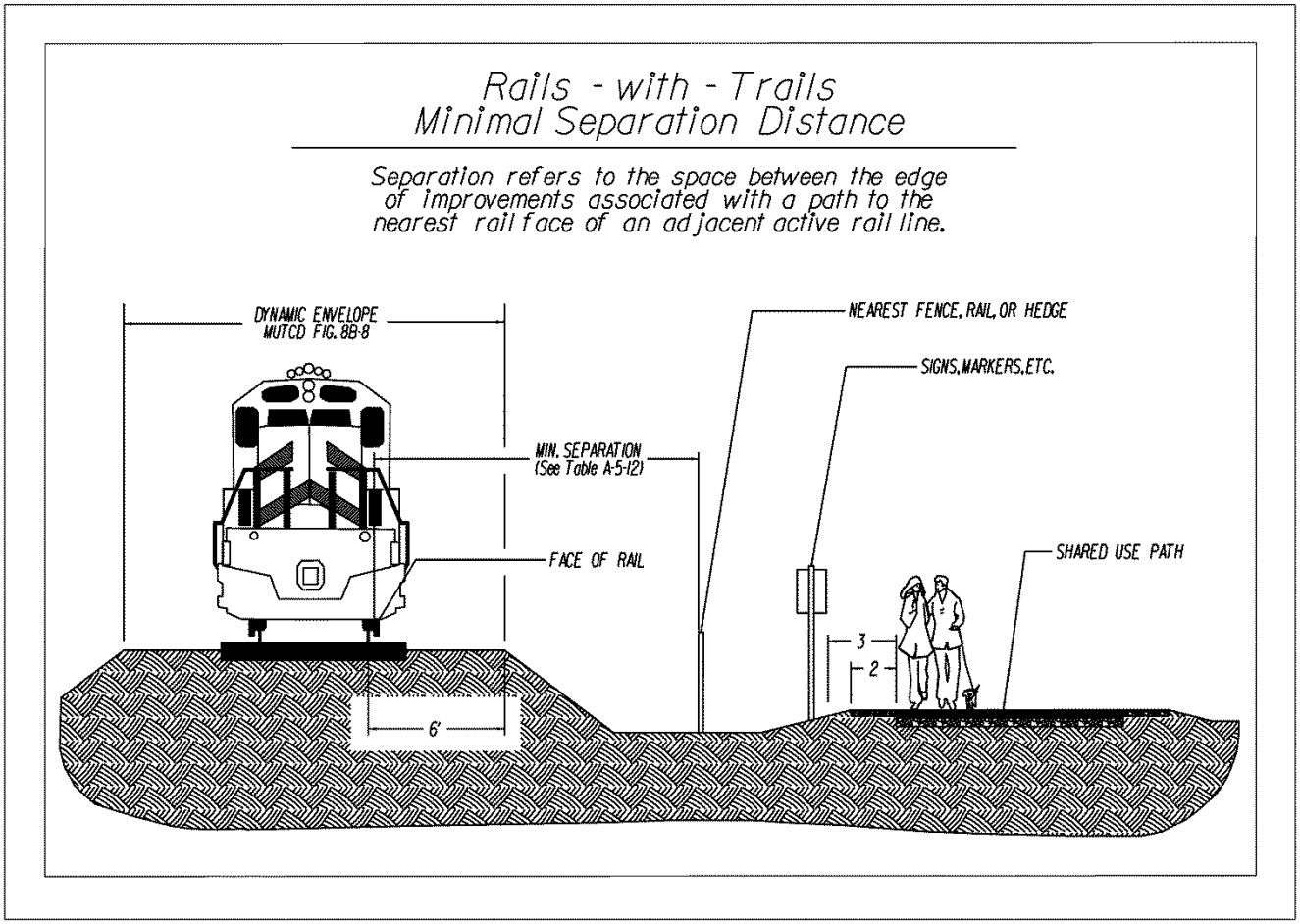

Source: Adapted from the *VTrans Pedestrian and Bicycle Facility Planning and Design Manual*

FIGURE A(1)-1-13

SEPARATION BETWEEN ACTIVE RAIL LINES AND PATHS (RWT)

* Rev. 7/18

Recommended Separation between Active Rail Lines and Paths (RWT)		
Type of Rail Operation	**Setting Characteristic**	**Recommended Minimum Separation**
High Volume/High Speed		
11 trains or more per day Max speed over 45 mph	Typical Conditions	25 feet with fence
		15 feet with a solid barrier
	Constrained Areas (cut/fill, bridges, etc.)	15 feet with fence or other physical barrier
	Vertical Separation of at least 10 feet	20 feet
Medium Volume/Medium Speed		
Fewer than 11 trains per day Max speed 45 mph	Typical Conditions	25 feet
		15 feet with physical barrier
	Constrained Areas	11 feet with physical barrier
	High Trespassing Areas	11 feet with physical barrier
Low Volume/Low Speed		
Fewer than 11 trains per day Max speed 45 mph	Typical Conditions	25 feet desired
		11 feet minimum
	Constrained Areas	11 feet with physical barrier

Adapted from FHWA Rails with trails Lessons Learned
Source: *VTrans Pedestrian and Bicycle Facility Planning and Design Manual*

TABLE A(1)-1-8

SEPARATION BETWEEN ACTIVE RAIL LINES AND PATHS (RWT)

*For additional information on *Rails-With-Trails*;

* Rev. 7/14

PEDESTRIAN ACCESS ROUTE AND CURB RAMP GOALS AND OBJECTIVES*

PEDESTRIAN ACCESS ROUTE

A Pedestrian Access Route provides a continuous accessible means of passage from one location to another within public right-of-way. New Pedestrian Access Routes (Sidewalks or Sidewalk Space) shall be 5 feet wide excluding the width of curb. However, in unique situations where this is not feasible, a minimum clear width of 4 feet shall be provided excluding the width of curb. Pedestrian Access Routes less than 5 feet excluding the width of curb require the submission of a Design Waiver (See IIM-LD-227). **Design Exceptions are not applicable for sidewalks less than 4 feet wide.** For additional information, see IIM-LD-55 (Curb Ramps and Sidewalks).

New Pedestrian Access Routes (Sidewalk or Sidewalk Space) less than 5 feet in continuous width excluding the width of curb shall provide a pedestrian passing area a minimum of 5 feet x 5 feet at reasonable intervals not to exceed 200 feet. These passing areas can be provided at street intersections with cross slopes no greater than 48:1 (2%).

Where pedestrian access routes are contained within a street or highway right-of-way, the grade of pedestrian access routes shall not exceed the general grade established for the adjacent street or highway. Where pedestrian access routes are not contained within a street or highway right-of-way, the grade of pedestrian access routes shall be 5% maximum.

The pedestrian access route surfaces shall be firm, stable, and slip resistant and openings that are more than ½ inch in one dimension are prohibited. The pedestrian access route is permitted level changes up to ¼ inch without treatment and level changes between ¼ inch and ½ inch that are beveled with a slope no greater than 2:1.

NEW CONSTRUCTION

All areas of newly designed and newly constructed facilities in public rights of way are subject to these guidelines. This applies to work such as the extension of roadways and sidewalks into undeveloped areas, new subdivisions, and similar types of projects. Full compliance is generally easier in these types of projects because the scope of work is usually extensive enough to allow necessary grading and acquisition of sufficient right of way.

When new construction or an alteration activity is conducted, curb ramp access must be evaluated as part of the project design. The minimum requirements for curb ramps differ for new construction and alterations.

---

* Rev. 7/18

ALTERATIONS

Alterations are discussed in more detail later in this Appendix. *

TECHNICALLY INFEASIBLE

Existing physical or site development conditions that prohibit the modification or incorporation of elements, spaces, or features which are in full and strict compliance with the minimum requirements for new construction in the public right of way and which are necessary for pedestrian access, circulation, and use (the basis used for exceptions and special technical provisions allowed in alterations). When an alteration meets accessibility requirements but is technically infeasible, the public agency must ensure that the alteration provides accessibility to the "maximum extent feasible".

CURB RAMPS

A curb ramp is required to provide access to and from pedestrian access routes (sidewalk or sidewalk space) for all users. This access is beneficial to pedestrians, users of wheelchairs, canes, crutches, walkers, braces, lower-limb prostheses, persons with gait balance and stamina disabilities, the elderly, and persons with visual disabilities (such as depth perception difficulties).

There are four objectives related to this goal:

1. Provide a curb ramp design and placement that is usable by persons with disabilities.
2. Provide design and placement alternatives for a range of sidewalk and street conditions.
3. Provide minimal negative impact to all pedestrians.
4. Place curb ramps in uniform and consistent locations.

Pedestrians with disabilities will benefit most from design approaches that minimize physical barriers to travel and maneuverability. Pedestrians who use crutches are particularly susceptible to cross slope when they are traveling downhill. Pedestrians with cognitive and sensory disabilities, particularly those who have limited vision and those who are blind, should have access to information on the pedestrian environment that is necessary for independent travel. Children, including those with disabilities and those using bicycles and other wheeled toys, are significant users of sidewalks and are significantly less able to compensate for cross slope than adults.

DESIGN GUIDELINES FOR CURB RAMPS

The design guidelines are based on a standard barrier curb height of 6 inches. Should increased heights be used, it will be necessary to add to the length of the curb ramp.

Gutter slopes at curb ramp locations should not exceed 20:1 (5%) for new construction. Therefore, VDOT's standard curb and gutter design should be modified for use adjacent to curb ramps to ensure proper slope and adequate drainage.

---

* Rev. 7/18

MISCELLANEOUS NOTES

Objects such as utility covers, manhole covers, vault frames and covers and grates shall **not** be located on curb ramp runs, blended transitions, turning spaces or the gutter area within the pedestrian access route. This may not always be possible in alterations, but should be avoided wherever possible.

Maintenance of curb ramps may be necessary where there is a low velocity of storm water runoff. Debris may accumulate in the relatively flat areas at the base of the ramps, particularly in CG-12, Type B. Very little can be done cost-effectively to overcome this from a design and placement perspective.

Special attention should be given to ensure that the bottoms of curb ramps and gutter pan lips are **not** adversely affected during street re-paving.

GUIDELINES FOR CURB RAMP LOCATIONS

The placement of curb ramps is as critical to their effectiveness as the design. Placement should be determined by design constraints of the sidewalk, roadway, and intersection with respect to obstructions, crosswalks, and intersection types. Placement relative to obstructions should maintain consistency and effectiveness.

Curb ramps shall be provided for each direction of crossing at intersections that incorporate pedestrian access routes, and on both sides of a mid-block location to establish a pedestrian access route. Curb ramps shall be in-line with the direction of pedestrian travel. If curb ramps are not placed at all corners of an intersection the ramp user's accessibility is restricted to the route that provides curb ramps. For more information, see IIM-LD-55 (Curb Ramps and Sidewalks).*

Curb ramps shall be located within the crosswalks (marked or unmarked). The ramps may be centered or located to one side of the crosswalk with the flare outside of the crosswalk. Curb ramps shall be located in front of the vehicle stop bar, if one exists. The Project Manager should discuss the relationship between crosswalks, stop bars and curb ramps with the Traffic Engineering Designer throughout the design of a project.

Typical situations depicting the placement of curb ramps and detectable warning surfaces in new construction and in alterations have been incorporated into VDOT's *Road and Bridge Standard* details. Designers are urged to use sound engineering judgment in determining placement.

On new construction projects, utility poles, traffic control devices (such as sign, signal and lighting structures), fire hydrants, and drop inlets should not be located within the pedestrian access route or obstruct the pedestrian access route to the curb ramp. Because the location of curb ramps may be adversely affected by obstructions, the curb ramp location should have priority over the location of potential obstructions.

---

* Rev.7/18

Pedestrian Access Routes that cross medians and refuge islands shall be a minimum of 6 feet in length and include a break or cut-through a minimum of 5 feet wide and include detectable warning surfaces. Detectable warning surfaces shall be truncated domes. See VDOT *Road and Bridge Standard* CG-12 and Median (M1 or M2) or Refuge Island (RI1 or RI2).

PROCEDURE FOR DETERMINING THE LOCATION AND DESIGN OF CURB RAMPS

What is the pedestrian's destination and what is their current route? Where is it safe for pedestrians to cross the roadway? Is there an established pedestrian access route network? The route may be along a sidewalk (or a relatively flat, unobstructed grassy area behind a curb even though it is not surfaced) and through intersections.

1. Determine if the subject project is a new project or an alteration project.
2. The Project Designer is to coordinate, early in the design process, with the State Bicycle and Pedestrian Planner concerning a pedestrian movement plan (pedestrian access route), Location and Design Policy and Procedure Section and the Traffic Engineering Design Section concerning crosswalk locations to determine the safest and shortest crossing locations.
3. Determine the best type of curb ramp (CG-12, Type A, B or C) for each location. Specify a CG-12, Type A if there is sufficient space for the landing at the top of the ramp.
4. Evaluate conflicts with curb ramps, such as light poles, fire hydrants, traffic control devices, signs, utilities, drainage structures, etc. and coordinate the revised crossing locations or fixed object locations as necessary to install curb ramps.
5. The above procedure should continue as necessary throughout the plan development process.

CURB RAMP ELEMENTS AND TYPES

A curb ramp consists of a Ramp, with a maximum running slope of 12:1 (8%), with Detectable Warning Surface extending the full width of the ramp* and its accompanying Landing, with Flares on each side where appropriate.

- **LANDING**

  A level area of a curb ramp with a cross slope of less than 48:1 (2%). For perpendicular curb ramps, the landing allows pedestrians to bypass the flares and ramp and provides a level maneuvering space for persons using wheelchairs entering or exiting the ramp. For parallel curb ramps, the landing is between the ramps. The landing clear width shall be a least as wide as the curb ramp, excluding flared sides, leading to the landing. In alterations, where there is no landing at the top of the curb ramp, the curb ramp flares shall be provided and shall not be steeper than 12:1 (8%). See drawing below as well as the Road and Bridge Standards.

  The type of curb ramp is determined by the direction the user is traversing the ramp in relation to the vehicular path of travel. The three (3) types of curb ramps are: Perpendicular Design (CG-12, Type A), Parallel Design (CG-12, Type B) and Combined (Parallel and Perpendicular) Design (CG-12, Type C).

---

* Rev.7/17

- **FLARE**

  The area where a pedestrian circulation path crosses the curb ramp, which shall be sloped 10 percent maximum, measured parallel to the curb line. Apart of the pedestrian circulation path, but not a part of the pedestrian access route. Curb ramps whose sides have returned curbs provide useful directional cues where they are aligned with the pedestrian street crossing and are protected from cross travel by landscaping, street furniture, chains, fencing, or railings. *

- **RAMP**

  The area of the curb ramp that leads to street level with a maximum running slope of 12:1 (8%), with a Detectable Warning Surface extending the full width.

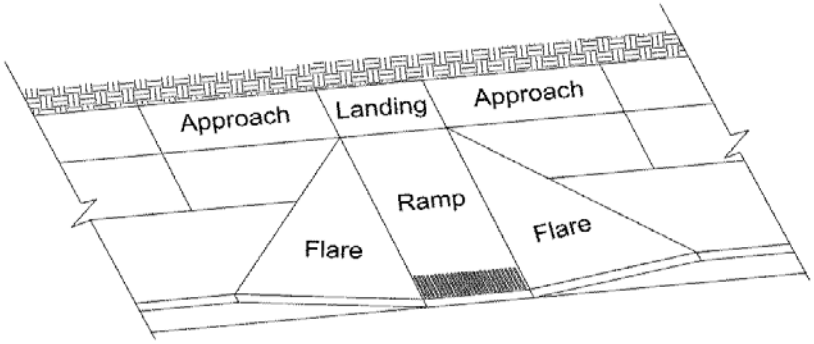

Curb Ramp Elements

* Rev.7/18

PERPENDICULAR CURB RAMP (CG-12, TYPE A)

A curb ramp, normally perpendicular to the curb at the street crossing, with a maximum running slope of 12:1 (8%) and a 48:1 (2%) maximum level landing (4 feet x 4 feet minimum) at the top. The bottom of the ramp run, exclusive of flared sides (10:1 (10%) maximum slope), shall be located within the crosswalk**.** The cross slope shall be 48:1 (2%) maximum. Sidewalks are permitted to follow the running slope of the adjacent roadway, which determines the cross slope of perpendicular ramps and landings at mid-block crossings. **One curb ramp shall be provided for each direction of intersection crossing, where feasible.** (See Standard CG-12, Type A in the VDOT *Road and Bridge Standards*.)

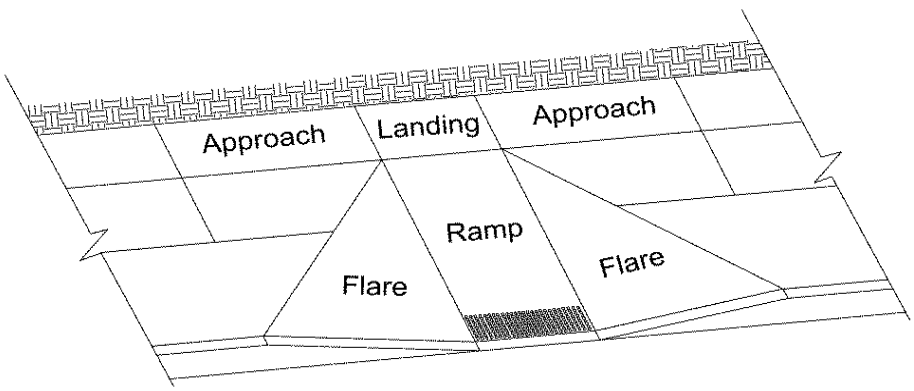

FIGURE A(1)-1-14

PERPENDICULAR CG-12, TYPE A*

* Rev. 7/14

PARALLEL CURB RAMP (CG-12, TYPE B)

Parallel ramps are especially suited to narrow rights-of-way where there is insufficient space for the top landing of a perpendicular curb ramp. In this case, the bottom landing usually serves as the direct connection to the street crossing and shall be located within the crosswalk. Criteria for parallel curb ramps address the running slope (grade) (12:1 (8%) maximum and 48:1 (2%) minimum), cross slope (48:1 (2%) maximum), level landings at the bottom at least 5 feet by 5 feet, and barriers at drop-offs. The running slope (grade) of parallel curb ramps will be affected by the slope of the sidewalk, which is permitted to be as steep as the adjacent roadway. Thus, a maximum slope of 12:1 (8%) may not be achievable due to the road grade. In recognition of this, the required length of a parallel ramp is limited* to 15 feet, regardless of the slope. The landing required at the bottom of the ramp is not permitted to slope more than 48:1 (2%) in any direction. **One curb ramp shall be provided for each direction of intersection crossing, where feasible.** (See Standard CG-12, Type B in the VDOT *Road and Bridge Standards*.)

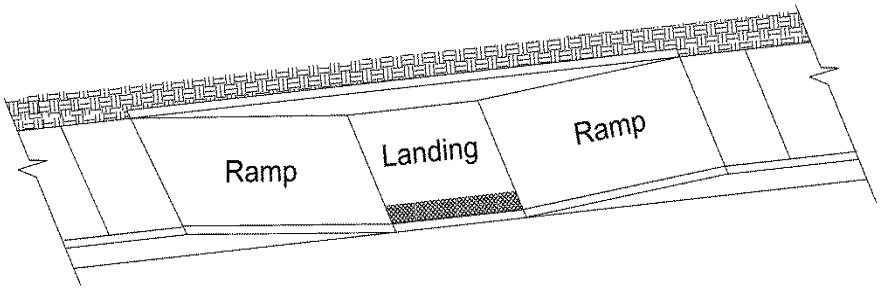

FIGURE A(1)-1-15

PARALLEL CG-12, TYPE B

* Rev. 7/19

COMBINED (PARALLEL & PERPENDICULAR) CURB RAMP (CG-12, TYPE C)

This alternative is typically used when public pedestrian right of way width established by local or state regulation, guideline, or practice will not accommodate a perpendicular curb ramp. A segment of the sidewalk is ramped or depressed to a relatively level landing to accomplish part of the level change and the balance is achieved by a short perpendicular curb ramp. **One curb ramp shall be provided for each direction of intersection crossing, where feasible.** (See Standard CG-12, Type C in the VDOT *Road and Bridge Standards*.)

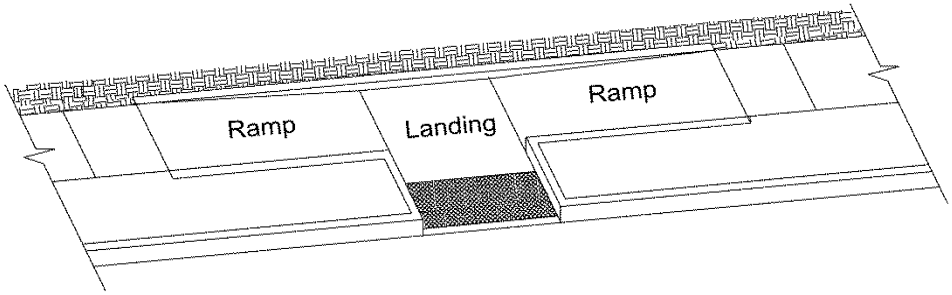

FIGURE A(1)-1-16

PARALLEL AND PERPENDICULAR CG-12, TYPE C*

* Rev. 7/14

CURB RAMP APPLICATION DETAILS*

ONE CURB RAMP SHALL BE PROVIDED FOR EACH DIRECTION OF INTERSECTION CROSSING, WHERE FEASIBLE. (CG-12, TYPE A, B OR C)

TWO CG-12, TYPE B'S ARE SHOWN BELOW:

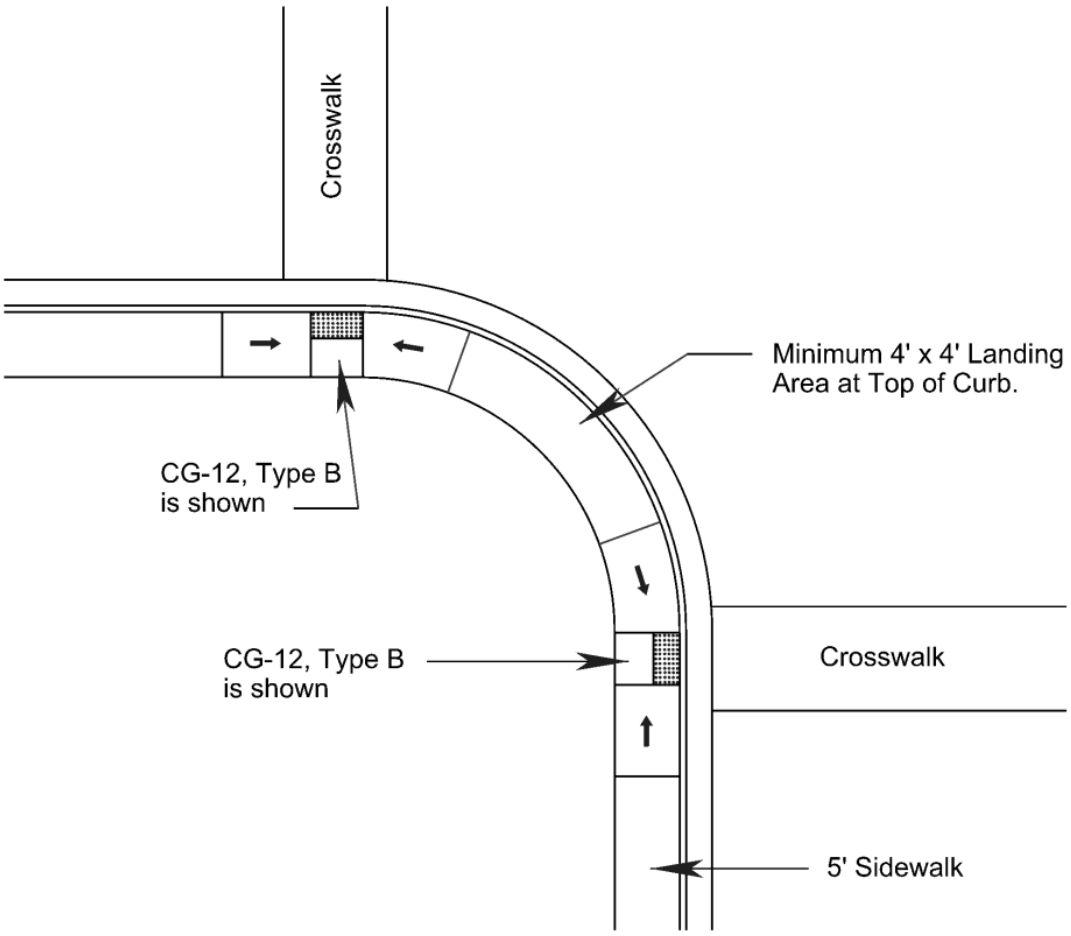

Ramp (with arrows) are 12:1 Maximum slope.

FIGURE A(1)-1-17

Two CG-12 Type B FOR EACH DIRECTION AT INTERSECTION

* Rev.7/14

DIAGONAL CURB RAMP (TO BE USED FOR ALTERATION PROJECTS ONLY)

Diagonal or corner type curb ramps with returned curbs or other well-defined edges shall have the edges parallel to the direction of pedestrian flow. The bottom of diagonal curb ramps shall have a clear space 48" minimum outside active traffic lanes of the roadway.

Diagonal curb ramps provided at marked crosswalks shall provide the 4 feet minimum clear space within the markings. Diagonal curb ramps with flared sides shall have a segment of curb 2 feet long minimum located on each side of the curb ramp and within the marked crossing as shown below. CG-12's Type A, B and C can be constructed as Diagonal Curb Ramps. However certain criteria apply. See FIGURES A(1)-1-18 and A(1)-1-19 below for criteria.

Note: Diagonal curb ramps force pedestrians descending the ramp to proceed into the intersection before turning to the left or right to cross the street and therefore, make it more difficult for individuals with vision impairments to determine the correct crossing location and direction. Persons with visual impairments may also mistake a diagonal curb ramp for a perpendicular curb ramp and unintentionally travel into the middle of the intersection. Designer should consider the intersection skew when using this layout.

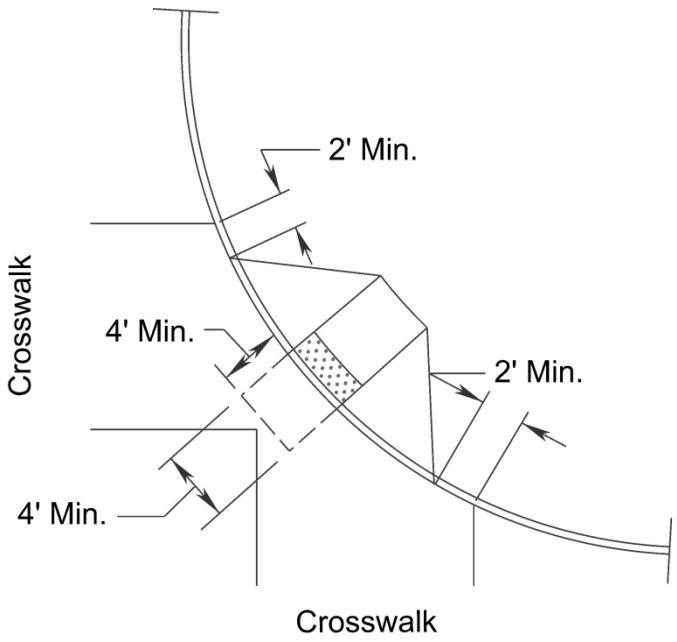

FIGURE A(1)-1-18

DIAGONAL OR CORNER TYPE CURB RAMPS

(TO BE USED FOR ALTERATION PROJECTS ONLY) *

* Rev. 7/18

Single Diagonal Parallel Curb Ramp, CG-12, Type B, with an Enlarged Landing Area (4 feet x 4 feet space may include gutter pan)

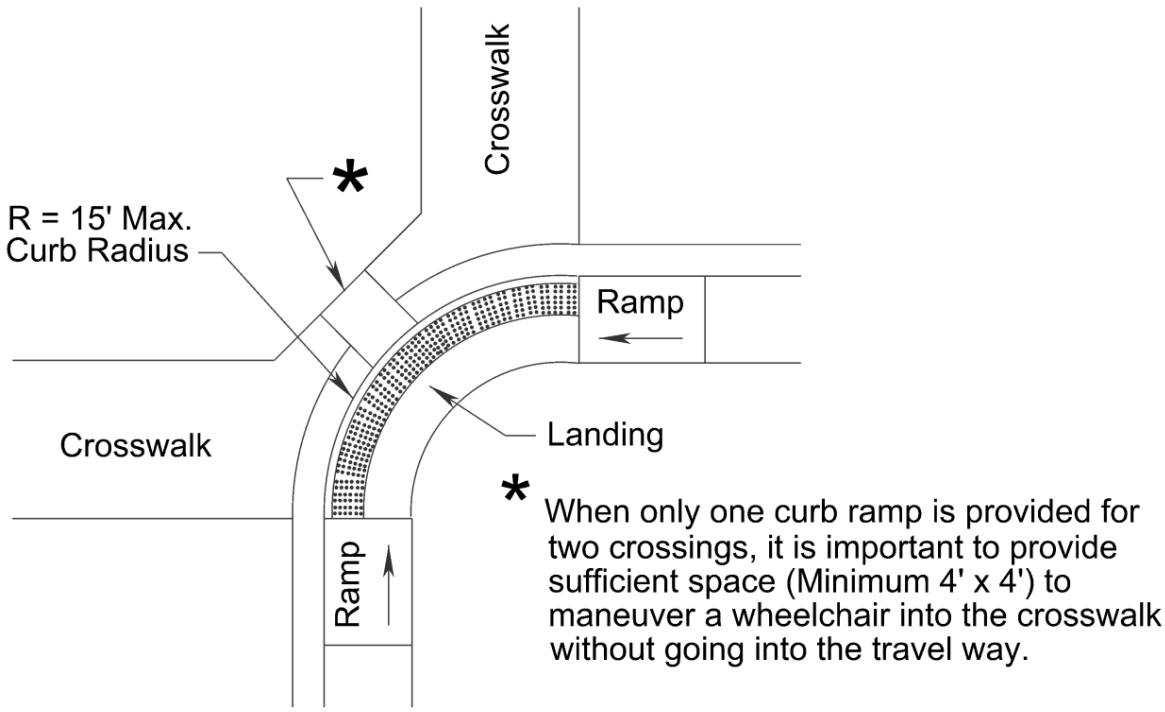

FIGURE A(1)-1-19

SINGLE DIAGONAL PARALLEL CURB RAMP, CG-12, TYPE B

(<u>TO BE USED FOR ALTERATION PROJECTS ONLY</u>)

Single diagonal parallel curb ramps shall not be used* for new construction. In alterations, it may be considered when the distance between two CG-12, Type B's is insufficient to install a separate landing for each. This layout shall provide a level landing area or maneuvering space (4 feet x 4 feet) at the bottom of the ramp and outside of the travelway as shown above.

Deleted Information

* Rev. 7/20

Single Diagonal Parallel Curb Ramp, CG-12, Type B;
A Sufficient Maneuvering Space (5 feet x 4 feet which may include the gutter pan) shall be provided for wheelchairs as shown below:

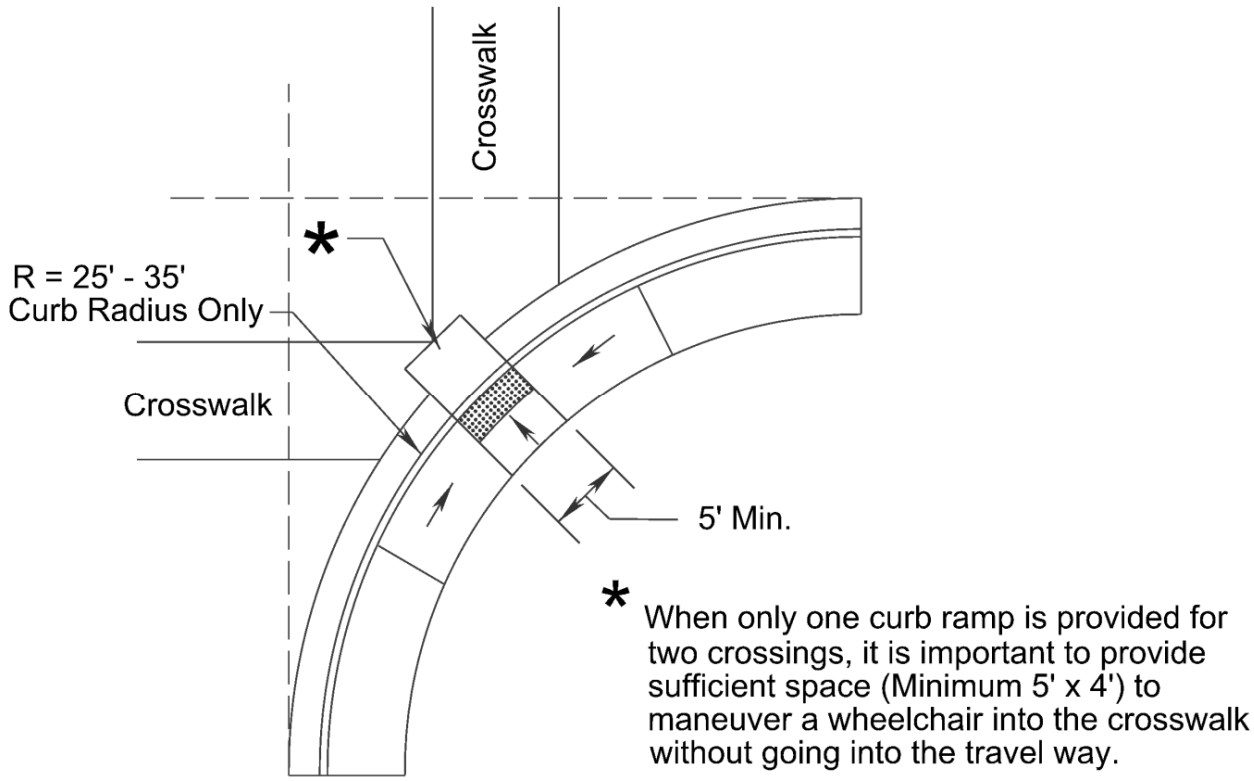

FIGURE A(1)-1-20

SINGLE DIAGONAL PARALLEL CURB RAMP, CG-12, TYPE B

(**TO BE USED FOR ALTERATION PROJECTS ONLY**)

Single diagonal parallel curb ramps shall not be used* for new construction. In alterations, it may be considered when the distance between two CG-12, Type B's is insufficient to install a separate landing for each. This layout shall provide a level landing area or maneuvering space (5 feet x 4 feet) at the bottom of the ramp and outside of the travelway as shown above.

Deleted Information

* Rev. 7/20

CG-12, Type B Layout <u>without</u> Buffer Strip

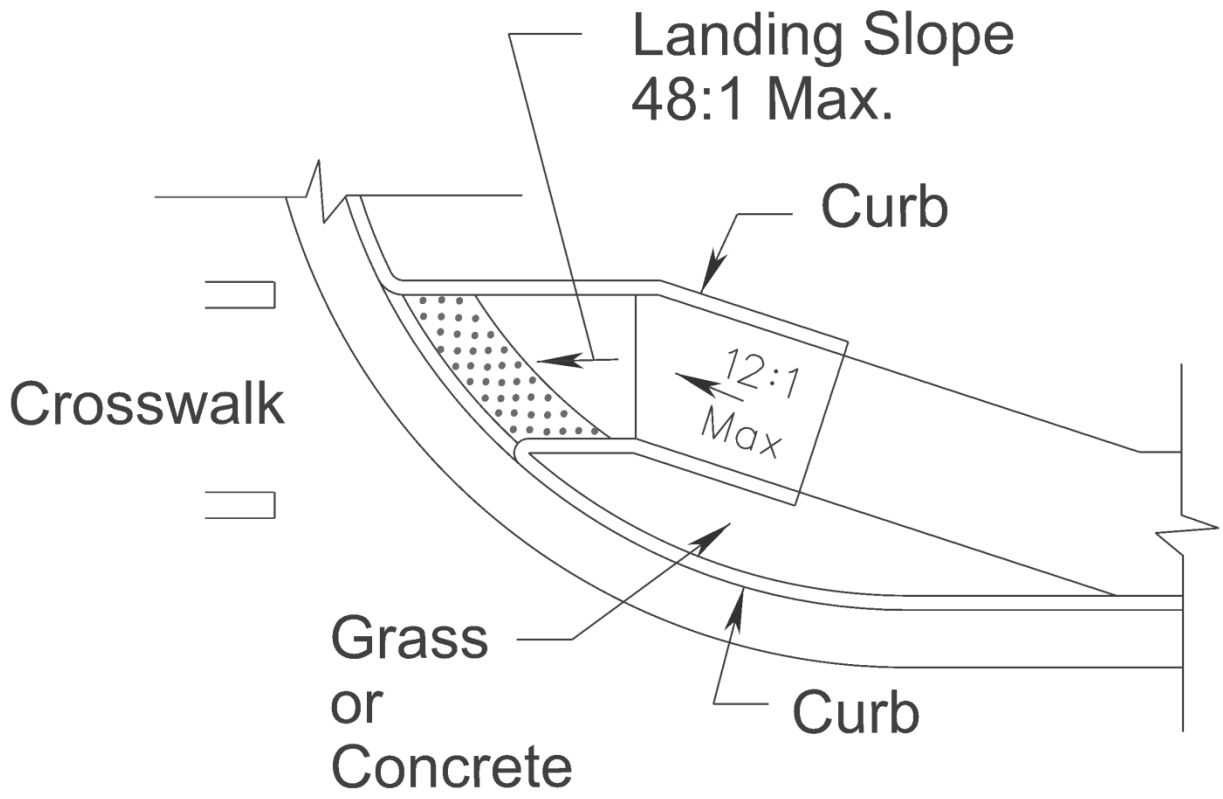

FIGURE A(1)-1-21

TYPE B LAYOUT <u>WITHOUT</u> BUFFER STRIP*

There may be situations where <u>right of way restrictions</u> dictate the above ramp configuration. **It should not be used where right of way or a pedestrian access route continues around the curve.** The bottom of the ramp may be located to the left of the curb return in the above example; however the ramp width shall not be less than 48" at the bottom.

* Rev. 1/18

CG-12, Type B Layout, with Buffer Strip

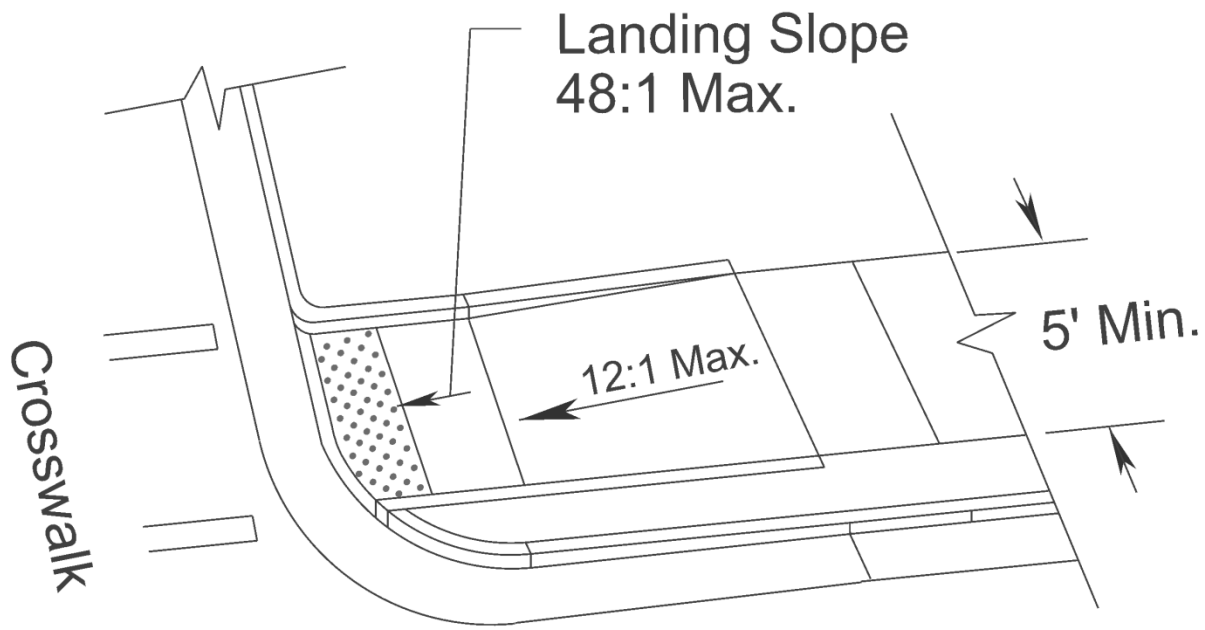

FIGURE A(1)-1-22 CG-12, TYPE B LAYOUT, WITH BUFFER STRIP*

This is similar to FIGURE A(1)-1-21 except with a buffer strip. **It should not be used where right of way or a pedestrian access route continues around the curve**.

* Rev. 1/18

ALTERATIONS

A change to a facility in the public right-of-way that affects or could affect access, circulation, or use. Projects altering the use of the public right-of-way must incorporate pedestrian access improvements within the scope of the project to meet the requirements of the *U.S. Access Board, Chapter 2 - Alterations and Questions and Answers About ADA/Section 504*. These projects have the potential to affect the structure, grade, or use of the roadway. Alterations include items such as reconstruction, rehabilitation, widening, resurfacing (see *USDOJ-FHWA Technical Assistance* dated 6-28-13 for additional clarification), pedestrian signal installation, signal installation and upgrades, and projects of similar scale and effect. *

Alterations shall incorporate accessibility improvements to existing pedestrian facilities to the extent that those improvements are in the scope of the project and are technically feasible, without regard to cost. Projects altering the usability of the roadway must incorporate accessible pedestrian improvements concurrent with the alterations to the roadway.

The DOJ considers resurfacing beyond normal maintenance to be an alteration. The DOJ does not consider maintenance activities, such as filling potholes, to be alterations. See DOJ's ADA Title II Technical Assistance Manual, § II-6.6000, 1993, *USDOJ-FHWA Technical Assistance* dated 6-28-2013 and http://www.ada.gov/doj-fhwa-ta-glossary.htm.

The FHWA has determined that maintenance activities include actions that are intended to preserve the system, lower the risk of future deterioration, and maintain the functional condition of the roadway without increasing the structural capacity. These activities include, but are not limited to, joint repair, pavement patching (filling potholes), shoulder repair, signing, striping, minor signal upgrades, and repairs to drainage systems.

For additional information, see the following:
Special Report: Accessible Public Right-of-Way Planning and Designing for Alterations dated August 31, 2007.

Questions and Answers About ADA/Section 504, which can be accessed at: http://www.fhwa.dot.gov/civilrights/programs/ada_sect504qa.cfm#q17

U.S. Access Board, Chapter 2 - Alterations
http://www.access-board.gov/guidelines-and-standards/streets-sidewalks/public-rights-of-way/guidance-and-research/accessible-public-rights-of-way-planning-and-design-for-alterations/chapter-2%e2%80%94alterations

* Rev. 7/15

GUIDELINES FOR ALTERATIONS

An alteration is considered when existing areas, elements, or facilities intended for pedestrian access, circulation, and use in an existing developed public facility are changed, modified or adjusted.

An alteration of an existing element, space, or area of a building or facility shall not impose a requirement for accessibility greater than required for new construction.

In alterations, where compliance with applicable requirements for new construction is technically infeasible, the alteration shall comply with the requirements to the “maximum extent feasible”.

An alteration that decreases or has the effect of decreasing the accessibility of a public building or facility below the requirements for new construction at the time of the alteration is prohibited.

If alterations to existing sidewalks curb ramps, or pedestrian street crossings, when considered together amount to reconstruction of a block, intersection, or other substantial segment of the pedestrian circulation network in the public right of way, the entire segment, to the “maximum extent feasible”, shall comply with provisions for new construction.

Alterations to a sidewalk, curb ramp, or pedestrian street crossing in the public right of way shall be made so that adjacent segments on the pedestrian access route are readily accessible to and usable by individuals with disabilities.

Ramps, curb ramps and exterior ramps to be constructed where space limitations prohibit the use of a 12:1 (8%) slope or less, may have slopes and rises as follows:

- A slope between 10:1 (10%) and 12:1 (8%) is allowed for a maximum rise of 6 inches.
- A slope between 8:1 (12.5%) and 10:1 (10%0 is allowed for a maximum rise of 3 inches.

Note: The required length of a parallel or perpendicular ramp is limited to 15 feet, regardless of the slope.*

In alterations, full extension of handrails shall not be required where such extensions would be hazardous due to the ramp configuration.

The guidelines for alterations apply technical requirements according to the scope of work for a planned alteration or addition. The more extensive the work is the greater are the opportunities to achieve access. Compliance is "prorated" based on the extent of the work planned. Additions and Alterations (1102.2).

Also see *PROWAG, Chapter R2, Section R202 Alterations and Elements Added to Existing Facilities*.

* Rev. 7/19

ALTERATION (RETROFIT) CG-12 INTO EXISTING CURB AND GUTTER AND/OR SIDEWALK LOCATIONS

When retrofitting a CG-12 into an existing curb and gutter location and/or sidewalk location, evaluation must be made for the most appropriate type of CG-12 configuration to match existing conditions with consideration of grade, type of curb and gutter, pedestrian path, available crosswalks, R/W, location of utilities, location of drainage structures, and any other features that may prohibit or affect the placement and design of the curb ramp.

The existing curb and gutter (or curb only) will need to be removed in the area of the ramp. If there is existing sidewalk it may need to be removed back to the point where the proposed curb ramp will meet existing sidewalk grade. A new curb and gutter will need to be placed to match the existing edge of pavement and to tie to the proposed CG-12 as called for on the plans by type. (This may result in a warped surface area of 20:1 rather that normal gutter slope in the area approaching the ramp.) The sidewalk will be placed to meet the selected type of CG-12 shown on the plans and the detectable warning surface will be placed by the acceptable method selected by the contractor as shown in the Standard for CG-12. **If the landing area is placed at the top of the ramp (i.e.: CG-12, Type A) it may be constructed of the same surface as the traversable path (including grass) although it still must meet the minimal requirements of a landing (i.e.: within R/W, flat surface, correct size, etc.).**

For additional information on curb ramps and sidewalks, see *Special Report: Accessible Public Right-of-Way Planning and Designing for Alterations* dated August 31, 2007 and IIM-LD-55.

Each CG-12 for alteration projects that do **not** comply with VDOT's Standard CG-12 will need to be designed and shown in detail on the plans. If additional assistance is needed, contact the Central Office Policies and Procedures Section Manager or the Central Office Special Design Section Engineer. *

The following pages show Examples of CG-12 configurations for alteration projects when compliance with VDOT's CG-12 Standards for new construction are technically infeasible. Alterations shall comply with the VDOT's CG-12 Standards to the "maximum extent feasible". For example, space limitations may prohibit a maximum slope of 12:1 (8%), see previous page. **However, curb ramps shall be a minimum of 4 feet wide.**

* Rev. 7/18

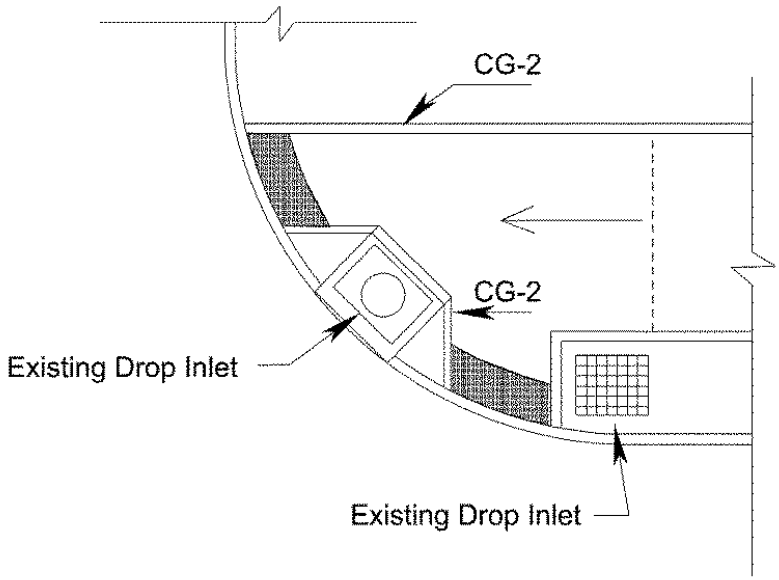

When the sidewalk does not continue around the radius

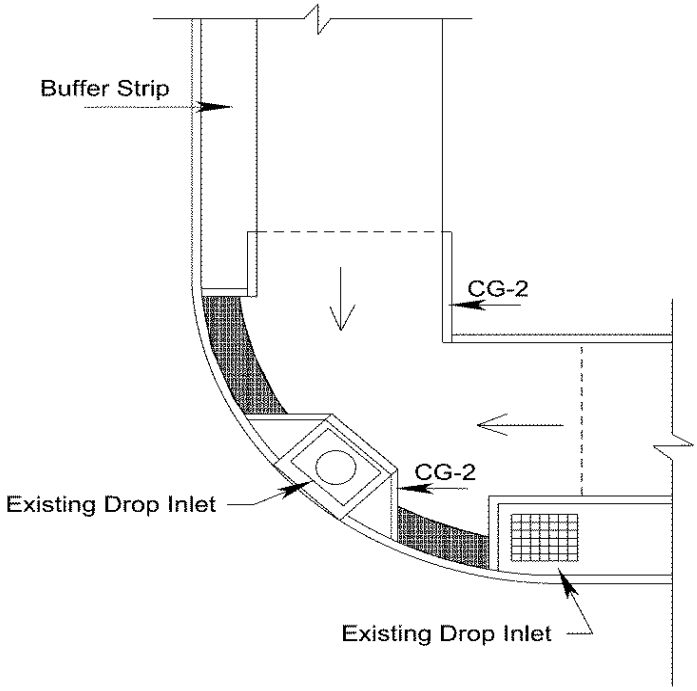

When the sidewalk continues around the radius

Added Information*

* Added 1/17

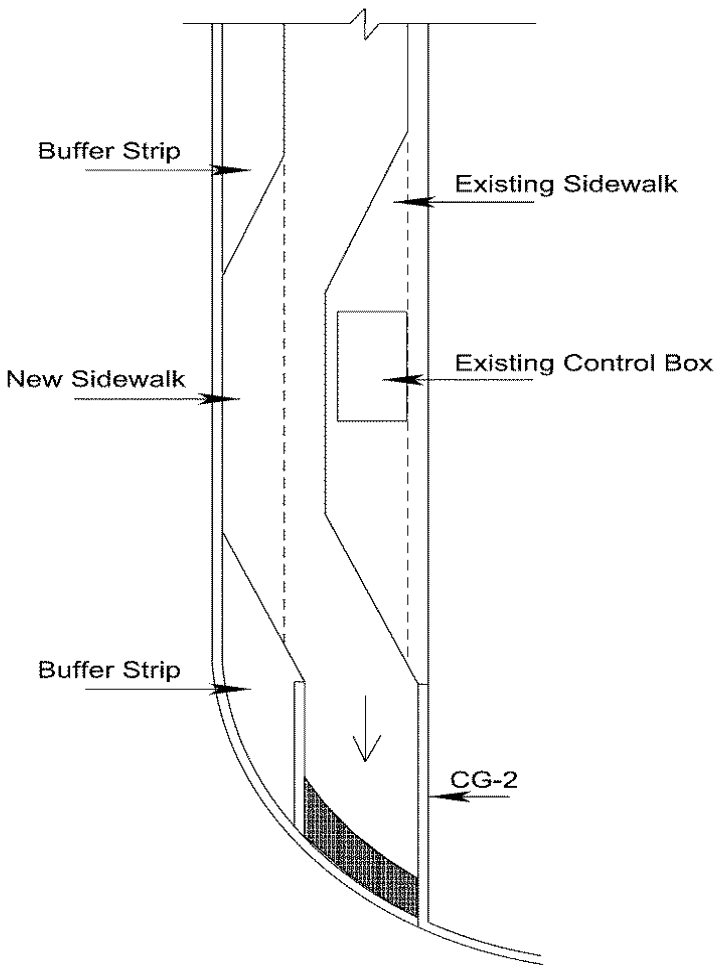

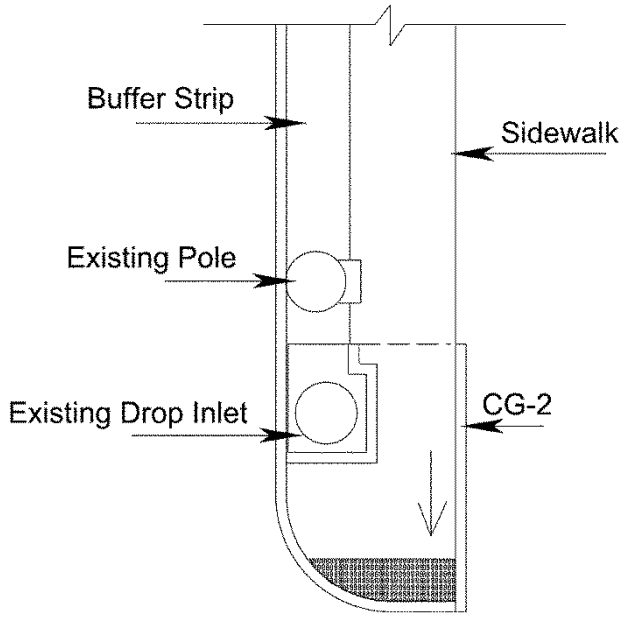

Added Information*

* Rev. 7/17

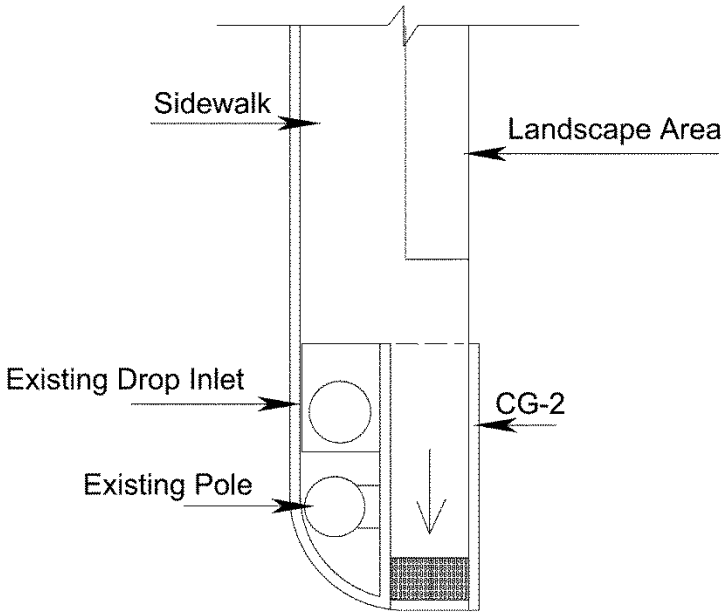

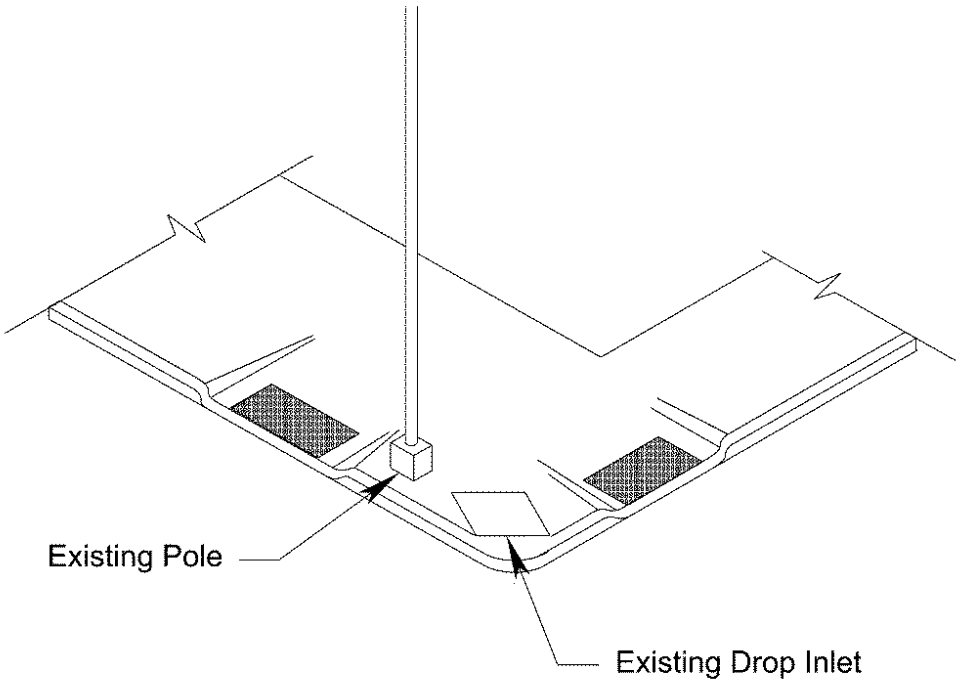

Added Information*

* Added 1/17

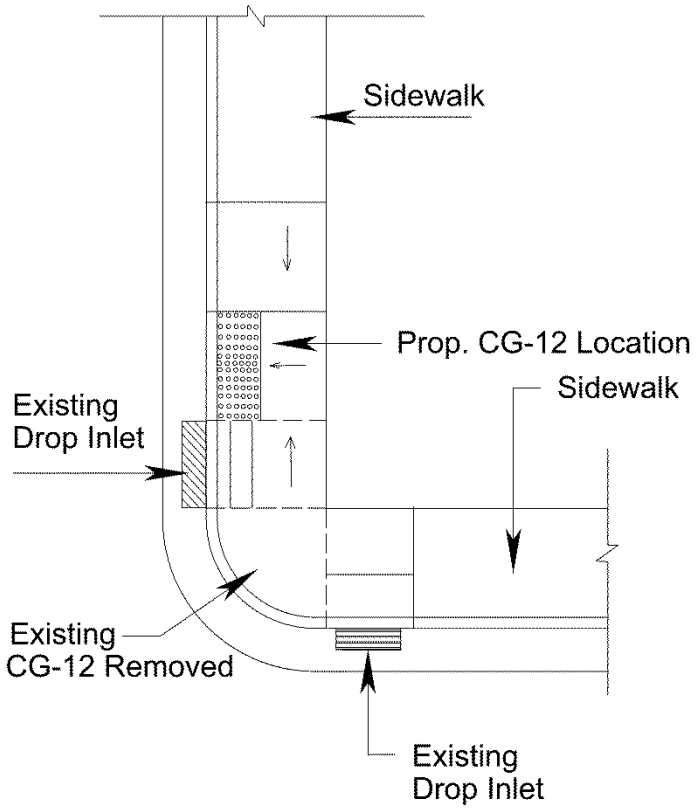

Added Information*

* Rev. 7/17

BUFFER STRIP

The space provided between the back of curb and the sidewalk to place all lateral obstructions (landscaping, fire hydrants, street lights, parking meters, signal control boxes, signal, sign and utility poles, etc.) to ensure that the pedestrian access route is free of obstacles. When possible, signal poles and signal control boxes should be located behind the sidewalk to minimize conflict with intersection sight distance.

- **Width**

  Buffer strips shall be 4 feet wide to provide the lateral offset for the placement of conventional signs (36”x36” wide) for Posted Speeds greater* than 25 mph in accordance with the *MUTCD*, Part 2 (See FIGURE A(1)-1-23, Detail 1 below). Buffer strips 3 feet wide may be utilized to provide the lateral offset for the placement of smaller signs (24”x24” wide) for Posted Speeds 25 mph and less (See FIGURE A(1)-1-23, Detail 2 below). **However, a Design Waiver shall be submitted for buffer strips less than 4 feet for Posted Speeds greater than 25 mph and for buffer strips less than 3 feet for Posted Speeds 25 mph or less, See IIM-LD-227**. In unique situations where **no** buffer strip is provided, additional right of way shall be acquired behind the sidewalk for the placement of lateral obstructions (sign, utility poles, landscaping, fire hydrants, street lights, parking meters, signal control boxes, and signal poles, etc.) as well as proposed drainage structures. The Roadway Designer should coordinate with the Traffic Engineering Designer to determine the amount of right of way necessary.

  The Roadway Designer has the option to meander sidewalk or construct a wider sidewalk to accommodate the minimum lateral offset for signs while maintaining a minimum clear width of 5 feet for the Pedestrian Access Route.

  If trees are to be planted in the buffer strip it shall be a minimum 6 feet wide and the trees should be planted so that the center of the trees are 3 feet minimum behind the back of curb.

* Rev. 7/14

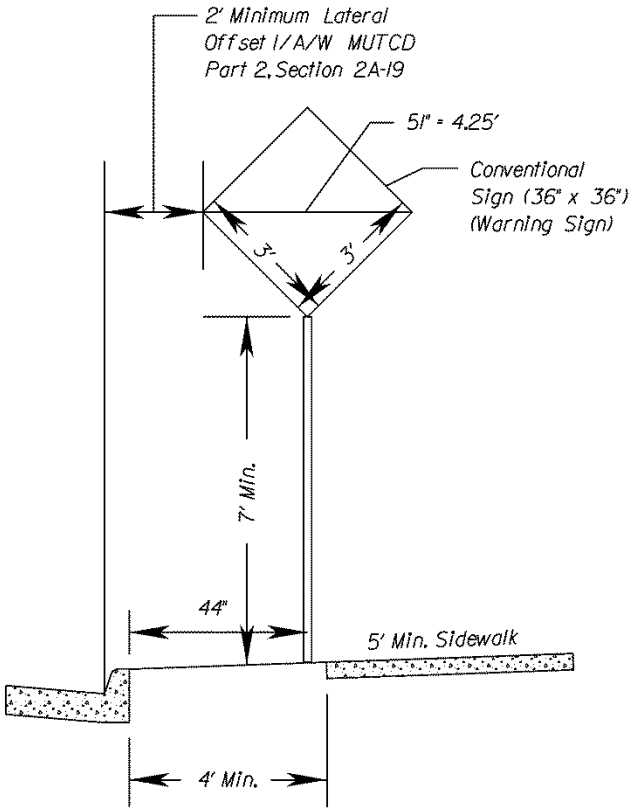

Typical Urban Projects
Greater than 25 mph
Posted Speed

DETAIL 1*

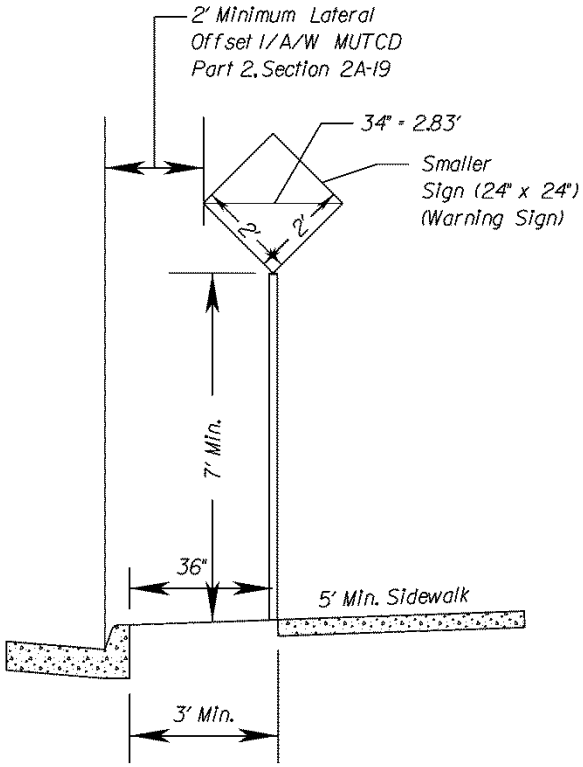

Subdivision Streets
25 mph Posted Speed
and Less

DETAIL 2

FIGURE A(1)-1-23

* Rev. 7/14

SIDEWALKS

Sidewalks are that portion of a public right of way between the curb line or lateral line of a roadway and the adjacent property line that is improved for use by pedestrians. Sidewalks shall have the following elements:

- **Vertical Clearance**

  The vertical clearance from the sidewalk to the bottom of any sign or over hanging vegetation (Trees) shall be 7 feet minimum in accordance with the *MUTCD*, Part 2 and AASHTO's Guide for the Planting, Design, and Operation of Pedestrian Facilities, respectively.* Guy wires and utility tie-downs should not be located in or across sidewalks at heights below 8 feet.

  The passage along or within a sidewalk should be clear of obstructions underfoot, overhead, or between. Objects with leading edges above the standard sweep of canes (27 inches) from the ground and below the standard head clearance (80 inches) from the ground shall protrude no more than 4 inches maximum horizontally into the accessible route.

- **Width**

  New sidewalks shall be 5 feet wide excluding the width of curb. However, in unique situations where this is not feasible, a minimum clear width of 4 feet shall be provided excluding the width of curb. Pedestrian Access Routes less than 5 feet wide excluding the width of curb require the submission of a Design Waiver (See IIM-LD-227. **Design Exceptions are not applicable for sidewalks less than 4 feet wide.**

  When a sidewalk is constructed adjacent to a retaining wall or parapet wall the minimum width shall be 6 feet measured from the back of the curb to the face of the retaining wall or parapet wall.

  New sidewalks less than 5 feet in continuous width excluding the width of curb shall provide a pedestrian passing area a minimum of 5 feet x 5 feet at reasonable intervals not to exceed 200 feet. These passing areas can be provided at driveways and street intersections with cross slopes no greater than 48:1 (2%).

  For **"NO"** on-street parking situations where sidewalk is placed adjacent to the back of curb it shall be 5 feet wide from the back of curb and requires the submission of a Design Waiver for No Buffer Strip (See IIM-LD-227). All lateral obstructions (sign, utility poles landscaping, fire hydrants, street lights, parking meters, signal control boxes, and signal poles, etc.) shall be placed behind the sidewalk so as not to encroach on the pedestrian access route. Therefore, right of way shall be acquired behind the sidewalk for placement of all lateral obstructions.

  For on-street parking situations, where sidewalk is placed adjacent to the curb, the width shall be 8 feet wide minimum from the back of curb to allow vehicle doors to open and people to exit from the vehicle without blocking the pedestrian access route.

---

* Rev. 1/16

- **Grade**

  Where pedestrian access routes are contained within a street or highway right-of-way, the grade of pedestrian access routes shall not exceed the general grade established for the adjacent street or highway. Where pedestrian access routes are not contained within a street or highway right-of-way, the grade of pedestrian access routes shall be 5 percent maximum.

- **Cross Slope**

  Sidewalk Cross slope shall not exceed 48:1 (2%). A level area with minimal cross slope is necessary for accessible passage across a driveway. Driveway aprons constructed like a ramp with steep short side flares can render a section of sidewalk impassible, especially when encountered in series as in residential neighborhoods.

- **Surfaces**

  Sidewalk surfaces shall be **stable, firm and slip resistant** and shall be generally in a continuous plane with a minimum of surface warping. "Materials such as gravel, wood chips, or sand, often used for outdoor walkways, are neither firm nor stable, nor can they generally be considered slip-resistant. Thus, these materials do not constitute an accessible route. However, some natural surfaces, such as compacted earth, soil treated with consolidants, or materials stabilized and retained by permanent or temporary geotextiles, gridforms, or similar construction may perform satisfactorily for persons using wheelchairs and walking aids."

  Changes in level up to 0.25 inch may be vertical and without edge treatment. Changes in level between 0.25 inch and 0.50 inch shall be beveled with a slope no greater than 2:1. Changes in level greater than 0.50 inch shall be accomplished by means of a ramp.

  Where sidewalks cross rail systems at grade, the surface of the pedestrian access route shall be level and flush with the rail top at the outer edge and between the rails.

- **Drainage Grates** in sidewalks shall have spaces no greater than 0.50 inch wide in the direction of travel. If grates have elongated openings, they shall be placed so that the long dimension of the opening is perpendicular to the dominant direction of travel. All efforts shall be made to avoid grates being located in pedestrian access routes. *

* Rev. 7/15

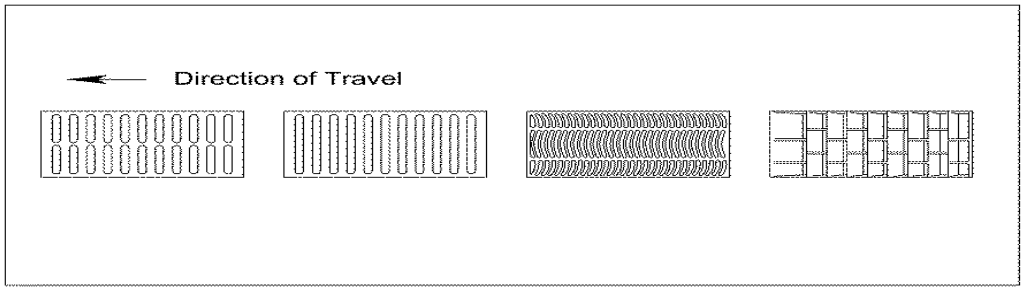

Sidewalks Along Curb and Gutter and/or Curb Streets

(1) Sidewalks along curb and gutter and/or curb streets shall be constructed with hydraulic cement concrete sidewalk or solid paving units and have a 1 foot minimum graded area (same slope as sidewalk, 2% max.)* behind the back of the sidewalk.

(2) Concrete sidewalks shall be constructed in accordance with the VDOT's *Road and Bridge Specifications* for hydraulic cement concrete sidewalk, on a compacted subgrade, and include underdrains in accordance with the VDOT's *Road and Bridge Standards*, Section 100, Standard UD-3.

(3) Solid paver unit sidewalks shall be constructed in accordance with VDOT's Location and Design Instructional & Information Memoranda IIM-LD-218, Paver Units (Sidewalk and crosswalk).

Sidewalks Along Shoulder and Ditch Streets

(1) Sidewalks along shoulder and ditch streets shall be constructed behind the ditch and have a 1 foot minimum graded area (same slope as sidewalk, 2% max.) between the ditch and the sidewalk as well as a 1 foot minimum graded area (same slope as sidewalk, 2% max.) behind the back of the sidewalk.

(2) Sidewalk shall be constructed in accordance with VDOT's Road and Bridge Specifications for asphalt concrete sidewalk or hydraulic cement concrete sidewalk, on a compacted subgrade, and include underdrains in accordance with VDOT's *Road and Bridge Standards*, Section 100, Standard UD-3.

* Rev. 7/20

Vertical and Horizontal Separation –

- **Curb and Gutter and/or Curb Typical Sections**

  Sidewalks shall be separated both vertically, by curb and gutter* and/or curb and horizontally from the adjacent roadway. Vertical separation shall be created through the installation of curbs. Horizontal separation can be achieved through the installation of a buffer strip, landscaping or furniture zones for benches, planters, literature display boxes, or similar clearly defined features or surfaces that will help guide persons who may otherwise unintentionally enter the vehicular way. If horizontal separation is not provided, a Design Waiver shall be submitted in accordance with IIM-LD-227).

- **Shoulder and Ditch Typical Sections**

  Sidewalks constructed along a shoulder and ditch section shall be placed behind the ditch in a manner that will be compatible with the roadway if the roadway is converted to a curb or curb and gutter section. **(Note: Placement of sidewalk within the shoulder area is <u>not</u> permitted.)**

* Rev. 7/17

RAILING REQUIREMENTS

- Railing (HR-1, Type II) is required when:

Where the sidewalk is adjacent to a parallel water hazard (greater than 2 feet deep), other obvious hazard or downward slope of 2:1 or steeper and a drop-off of 4 feet or more, a minimum 5 foot wide separation from the back edge of the sidewalk to the top of slope is required. When the separation from the back edge of the sidewalk to the top of the slope is less than 5 feet, a railing (HR-1, Type II) is required. * When a sidewalk is constructed adjacent to a retaining wall or a structure with a drop-off of 1 foot or more, a railing (HR-1, Type II) is also required.

Note: When railing is required and the grade of the sidewalk is 5% or greater a gripping rail is required.

When a railing (HR-1, Type II) is required, contact the Location and Design Standards and Special Design Section for details. Also see VDOT *Road and Bridge Standards.*

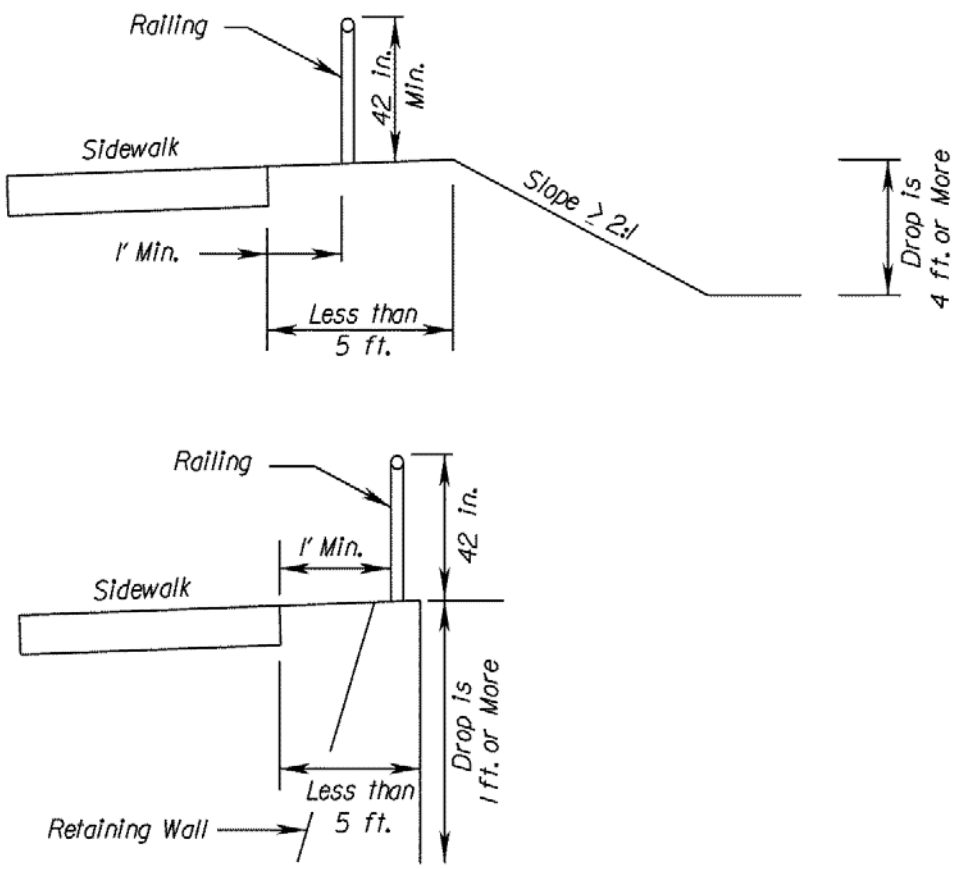

FIGURE A(1)-1-24

RAILING FOR SIDEWALKS

* Rev. 7/18

SIDEWALK TRANSITION FROM ROADWAY ONTO BRIDGE

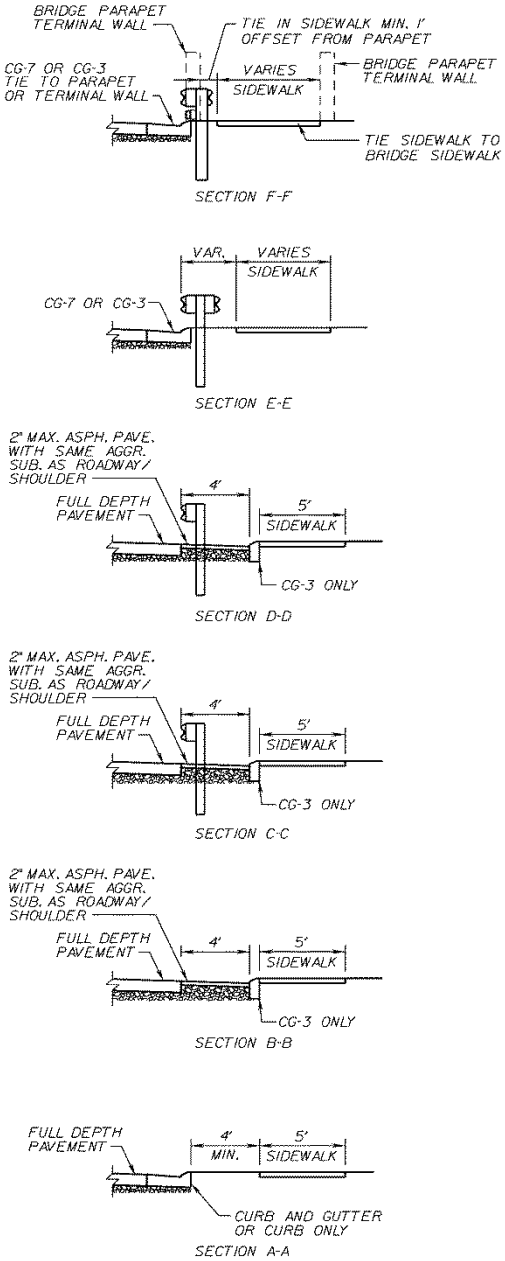

FIGURE A(1)-1-25 SIDEWALK TRANSITION FROM ROADWAY ONTO BRIDGE FOR DESIGN SPEEDS >45 MPH*

* Rev. 7/19

SECTION A(1)-2 PARKING DESIGN FEATURES

ON-STREET PARKING

- **PARALLEL PARKING**

  Parallel parking is the preferred arrangement for on-street parking. Provisions for on-street parallel parking are allowed on roadways functionally classified as collectors or locals where the posted speed limit is 35 mph or less. See Secondary Street Acceptance Requirements (SSAR) 24 VAC 30-92-120 Design and agreement Requirements.

  The use of curb and gutter and/or shoulder and ditch designs for on-street parking will be accommodated, using the following widths for the parking lane:

  - Residential and mixed-use local streets – 7 feet in width measured from the face of curb.
  - Commercial and industrial – 8 feet in width measured from the face of curb

  Note: No parking within 20 feet of any intersection measured from the curb return of the intersection.*

- **PERPENDICULAR AND ANGLE PARKING**

  Perpendicular and angle parking along streets is normally prohibited. However, perpendicular and angle parking may be allowed on low-speed (25 mph and less), low volume collector and local streets with ground floor commercial uses, primarily those serving as main streets and local streets in Traditional Neighborhood Development (TND) or similar higher-density developments.

  Parked vehicle overhangs (distance of 2 feet) shall not reduce the clear width of the pedestrian accessible route (sidewalk) adjacent to the parking spaces, which shall be accomplished by the installation of wheel stops as shown in FIGURE A(1)-2-3 and A(1)-2-4.

- **ACCESSIBLE PARKING SPACES**

  Accessible parking spaces should be located where the street has the least crown and grade and located and designed to provide the shortest possible route to key destinations.

  Accessible parking spaces and accessible passenger loading zones that serve a particular building shall be located on the shortest possible accessible circulation route to an accessible entrance of the building.

---

* Rev. 7/19

See TABLE A(1)-2-1 for the required minimum number of accessible spaces based on the total number of marked or metered parking spaces on the block perimeter.

See FIGURES A(1)-2-7, A(1)-2-8, A(1)-2-9 and A(1)-2-10 that illustrate different combinations of Accessible Parking Spaces and Access Aisles that will accommodate cars, trucks and vans.

Accessible parking spaces shall be identified and designated as reserved by signs and markings displaying the International Symbol of Accessibility. For information on Signing and Marking Accessible Parking Spaces see 502.6 Identification in the Park-and-Ride Lots section.

The information below is from *Proposed Guidelines for Pedestrian Facilities in the Public Right-of-Way* (PROWAG) dated July 26, 2011, (Chapters R2 and R3). *

R214 On-Street Parking Spaces. Where on-street parking is provided on the block perimeter and the parking is marked or metered, accessible parking spaces complying with **R309** shall be provided in accordance with TABLE A(1)-2-1 . Where parking pay stations are provided and the parking is not marked, each 20 feet of block perimeter where parking is permitted shall be counted as one parking space.

Total Number of Marked or Metered Parking Spaces on the Block Perimeter	Required Minimum Number Accessible Spaces
1 to 25	1
26 to 50	2
51 to 75	3
76 to 100	4
101 to 150	5
151 to 200	6
201 and over	4% of total

Source: Proposed Accessibility Guidelines for Pedestrians Facilities in the Public Rights of Way: Dated July 26, 2011.

TABLE A(1)-2-1
ON-STREET PARKING SPACES

* Rev. 7/18

Advisory R214 On-Street Parking Spaces. The MUTCD contains provisions for marking on-street parking spaces (See Section 3B.19). Metered parking includes parking metered by parking pay stations. Where parking on part of the block perimeter is altered, the minimum number of accessible parking spaces required is based on the total number of marked or metered parking spaces on the block perimeter.

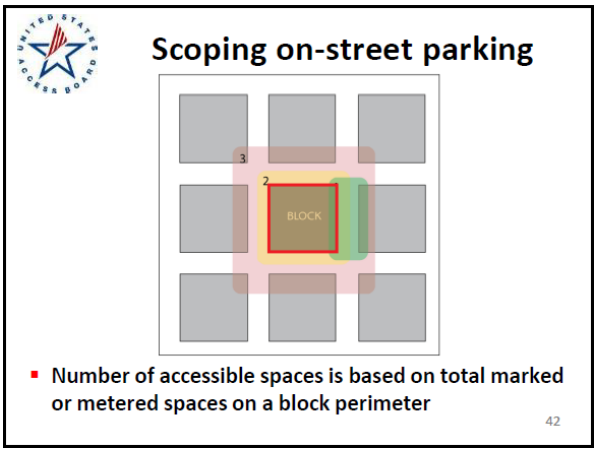

R215 Passenger Loading Zones. Where passenger loading zones other than transit stops are provided, at least one accessible passenger loading zone complying with **R310** shall be provided for each 100 feet of continuous loading zone space or fraction thereof.

R309 On-Street Parking Spaces*

R309.1 General. On-street parking spaces shall comply with R309.

Advisory R309.1 General. R214 specifies how many accessible parking spaces must be provided on the block perimeter where on-street parking is marked or metered. Accessible parking spaces must be identified by signs displaying the International Symbol of Accessibility **(see R211.3 and R411)**. Accessible parking spaces should be located where the street has the least crown and grade and close to key destinations.

R309.2 Parallel Parking Spaces. Parallel parking spaces shall comply with **R309.2**.

Advisory R309.2 Parallel Parking Spaces. The sidewalk adjacent to accessible parallel parking spaces should be free of signs, street furniture, and other obstructions to permit deployment of a van side-lift or ramp or the vehicle occupant to transfer to a wheelchair or scooter. Accessible parallel parking spaces located at the end of the block face are usable by vans that have rear lifts and cars that have scooter platforms.

R309.2.1 Wide Sidewalks. Where the width of the adjacent sidewalk or available right-of-way exceeds 14.0 ft., an access aisle 5.0 ft. wide minimum shall be provided at street level the full length of the parking space and shall connect to a pedestrian access route. The access aisle shall comply with **R302.7** and shall not encroach on the vehicular travel lane. See Figure A(1)-2-1.

---

* Rev. 7/19

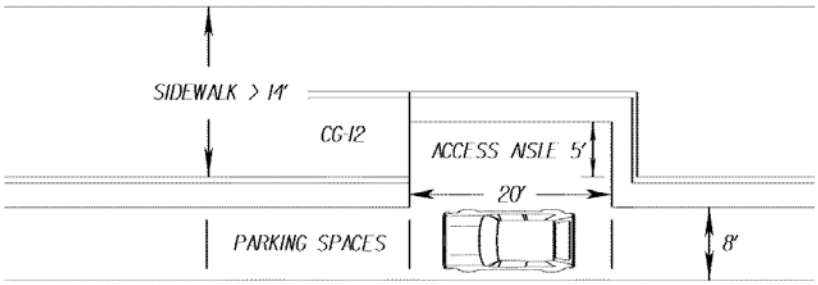

FIGURE A(1)-2-1

DESIGN FOR ACCESSIBLE PARALLEL PARKING SPACES

R309.2.2 Narrow Sidewalks. An access aisle is <u>not</u> required where the width of the sidewalk between the extension of the normal curb and boundary of the public right-of-way is less than 14 feet. When an access aisle is <u>not</u> provided, the accessible parking space shall be located at either the end of the block closest to the CG-12 curb ramp at the street crossing. See FIGURE A(1)-2-2.

Advisory R309.2.2 Narrow Sidewalks. Vehicle lifts or ramps can be deployed on an 8 feet sidewalk if there are no obstructions.

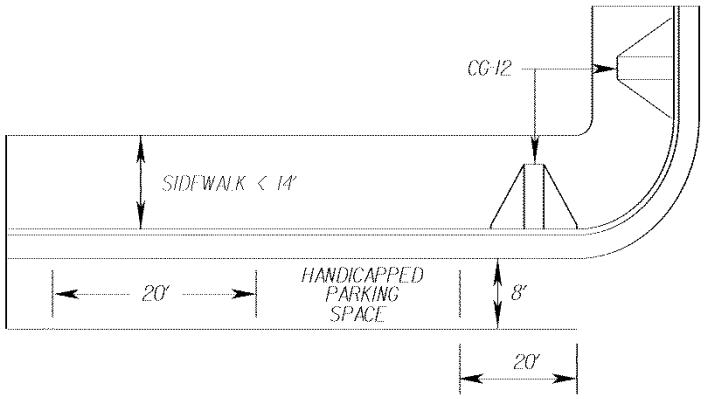

FIGURE A(1)-2-2

DESIGN FOR ACCESSIBLE PARALLEL PARKING SPACE EXCEPTION*

<u>Note:</u> Corner clearance (i.e., the distance from the end of the intersection curb return to the nearest edge of on-street parking) shall be 20 feet. If a traffic control device faces the parking channel, the distances should be 30 feet. Under all circumstances, on-street parking shall not be permitted where it will obstruct necessary sight distance.

R309.3 Perpendicular or Angled Parking Spaces. Where perpendicular or angled parking is provided, an access aisle 8 feet wide minimum shall be provided at street level the full length of the parking space and shall connect to a pedestrian access route (via a curb ramp) serving the space. The Access aisle shall be marked so as to discourage parking in the access aisle. Two

* Rev. 7/19

Accessible Parking Spaces are permitted to share a common access aisle. See FIGURES A(1)-2-3 and A(1)-2-4.

Advisory R309.3 Perpendicular or Angled Parking Spaces. Perpendicular and angled parking spaces permit the deployment of a van side-lift or ramp.

Advisory R309.4 Curb Ramps or Blended Transitions. Curb ramps or blended transitions complying with R304 shall connect the access aisle to the pedestrian access route. Curbs shall not be located within the access aisle.

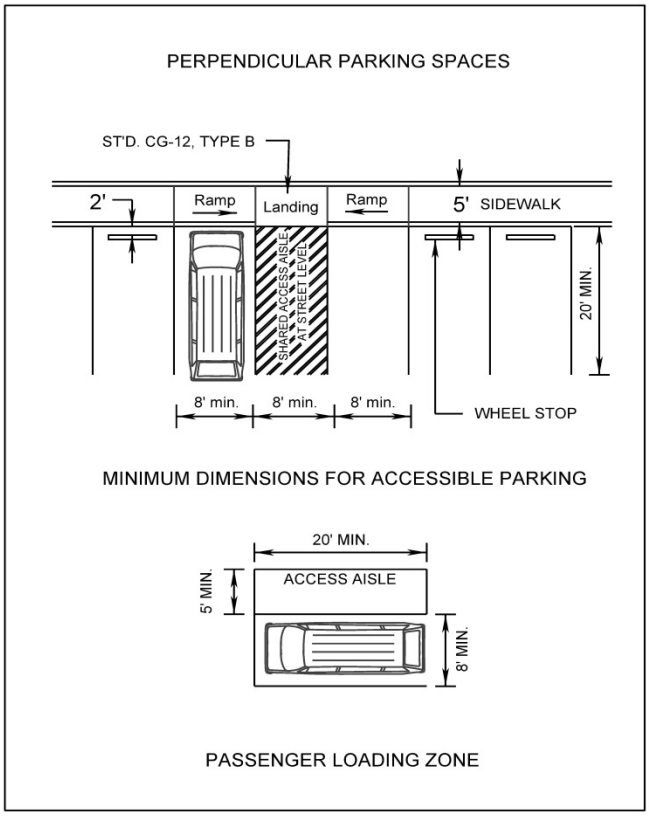

FIGURE A(1)-2-3

PERPENDICULAR ACCESSIBLE PARKING SPACES PASSENGER AND LOADING ZONES

Note: Wheel stops are required when parking spaces (accessible or otherwise) are located perpendicular* to the sidewalk / pedestrian accessible route and shall be located a minimum of 2 feet from the face of curb, so that the parked vehicle does **not** encroach into and reduce the usable width of the sidewalk / pedestrian accessible route. See Figures A(1)-2-3 and A(1)-2-8 thru 2-11.

PASSENGER LOADING ZONES: Passenger loading zones shall provide a vehicular pull-up space 8 feet wide minimum and 20 feet long minimum. The access aisle serving the vehicle pull-up space shall be 5 feet wide minimum and adjoin a pedestrian route and shall not overlap the

* Rev. 7/20

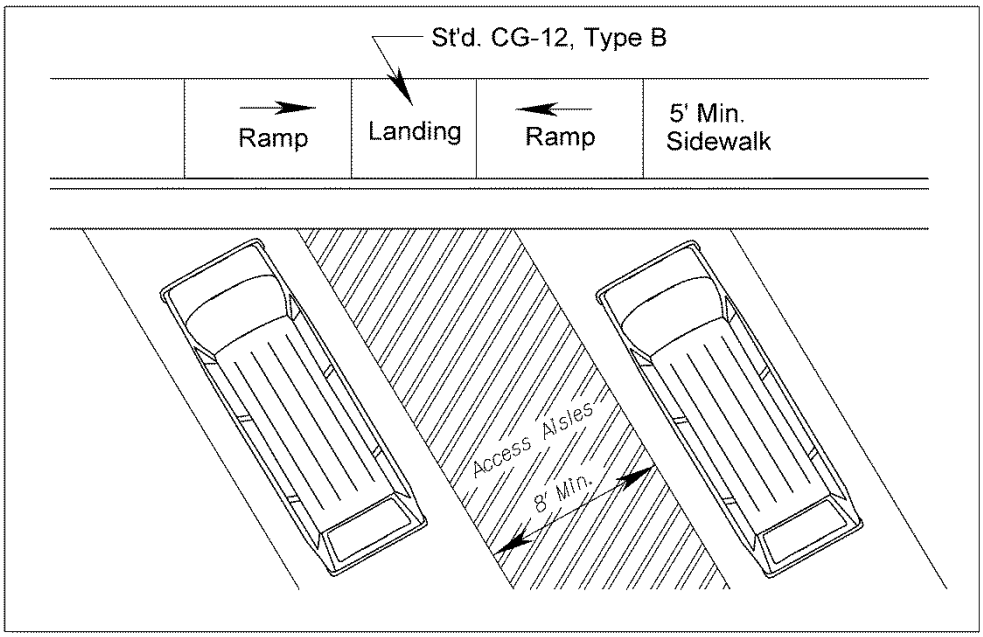

FIGURE A(1)-2-4

ANGLED ACCESSIBLE PARKING SPACES (SEE R309.3)

R309.5 Parking Meters and Parking Pay Stations. Parking meters and parking pay stations that serve accessible parking spaces shall comply with R309.5. Operable parts shall comply with R403. *

R309.5.1 Location. At accessible parallel parking spaces, parking meters shall be located at the head or foot of the parking space.

Advisory R309.5.1 Location. Locating parking meters at the head or foot of the parking space permits deployment of a van side-lift or ramp or the vehicle occupant to transfer to a wheelchair or scooter.

R309.5.2 Displays and Information. Displays and information shall be visible from a point located 3.3 feet maximum above the center of the clear space in front of the parking meter or parking pay station.

* Rev. 7/18

R310 Passenger Loading Zones*

R310.1 General.

Passenger loading zones shall comply with **R310**.

Advisory R310.1 General. Accessible passenger loading zones must be identified by signs displaying the International Symbol of Accessibility (See R211.3 and R411).

R310.2 Vehicle Pull-Up Space. Passenger loading zones shall provide a vehicular pull-up space 8 feet wide minimum and 20 feet long minimum.

R310.3 Access Aisle. Passenger loading zones shall provide access aisles complying with **R310.3** adjacent to the vehicle pull-up space. Access aisles shall be at the same level as the vehicle pull-up space they serve and shall not overlap the vehicular travel lane. Curb ramps or blended transitions complying with **R304** shall connect the access aisle to the pedestrian access route. Curb ramps are not permitted within the access aisle.

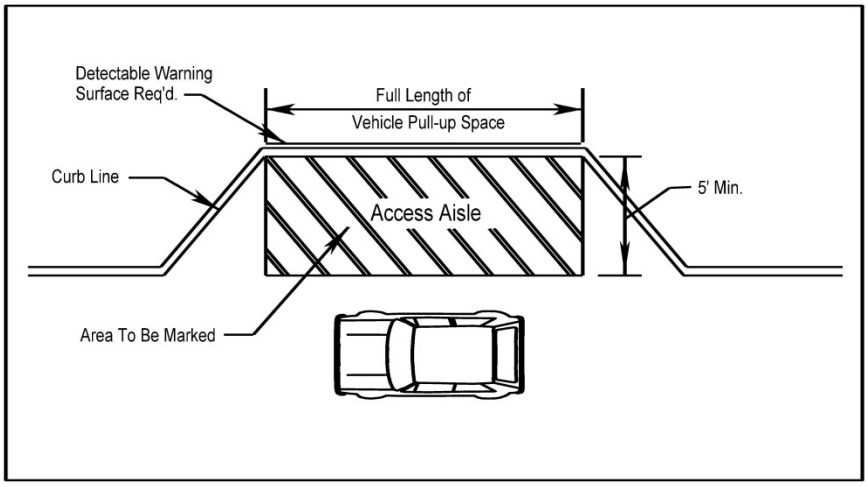

FIGURE A(1)-2-5
ACCESS AISLE (R310.3)

R310.3.1 Width. Access aisles serving vehicle pull-up spaces shall be 5.0 feet wide minimum.

R310.3.2 Length. Access aisles shall extend the full length of the vehicle pull-up spaces they serve.

R310.3.3 Marking. Access aisles shall be marked so as to discourage parking in them.

R310.3.4 Surfaces. Access aisle surfaces shall comply with **R302.7**.

---

* Rev. 7/18

OFF-STREET AND PARK-AND-RIDE LOTS

All off-street parking areas must include on-site maneuvering areas and aisles to permit vehicles to enter and exit the site in forward drive without hesitation.*

- **ACCESSIBLE PARKING SPACES**

In separate parking structures or lots that do not serve a particular building, accessible parking spaces shall be located on the shortest possible circulation route to an accessible pedestrian entrance of the parking facility.

See TABLE A(1)-2-2 for the required minimum number of accessible spaces and van accessible parking spaces based on the total number of parking spaces provided in the parking facility

See FIGURES A(1)-2-7, A(1)-2-8, A(1)-2-9 and A(1)-2-10 that illustrate different combinations of Accessible Parking Spaces and Access Aisles that will accommodate cars, trucks and vans.

Accessible parking spaces shall be identified and designated as reserved by signs and markings displaying the International Symbol of Accessibility. For information on Signing and Marking Accessible Parking Spaces see **502.6 Identification** in the Park-and-Ride Lots section.

This information is from the *2010 ADA Standards for Accessible Design* dated September 15, 2010, (Chapter 2, Section 208, Chapter 5, Section 502)

For additional information, see FIGURE A(1)-2-13 PARKING SPACE DESIGN AND ARRANGEMENT FOR PARKING LOTS AND PARK & RIDE LOTS in the Rest Area section of this Appendix. Also see VDOT's *Park & Ride Lot Design Guidelines*.

R208 Parking Spaces.

208.1 General. Where parking spaces are provided, parking spaces shall be provided in accordance with **208**.

EXCEPTION: Parking spaces used exclusively for buses, trucks, other delivery vehicles, law enforcement vehicles, or vehicular impound shall not be required to comply with **208** provided that lots accessed by the public are provided with a passenger loading zone complying with **503**.

R208.2 Minimum Number. Parking spaces complying with **502** shall be provided in accordance with TABLE A(1)-2-2 except as required by **208.2.1, 208.2.2**, and **208.2.3**. Where more than one parking facility is provided on a site, the number of accessible spaces provided on the site shall be calculated according to the number of spaces required for each parking facility.

* Rev. 7/18

Advisory 208.2 Minimum Number. The term "parking facility" is used Section **208.2** instead of the term "parking lot" so that it is clear that both parking lots and parking structures are required to comply with this section. The number of parking spaces required to be accessible is to be calculated separately for each parking facility; the required number is not to be based on the total number of parking spaces provided in all of the parking facilities provided on the site. *

R208.2.4 Van Parking Spaces. For every six or fraction of six accessible parking spaces required by **208.2** to comply with **502**, at least one shall be a “van” parking space complying with **502**.

208.3 Location. Parking facilities shall comply with **208.3**

208.3.1 General. Parking spaces complying with **502** that serve a particular building or facility shall be located on the shortest accessible route from parking to an entrance complying with **206.4**. Where parking serves more than one accessible entrance, parking spaces complying with **502** shall be dispersed and located on the shortest accessible route to the accessible entrances. In parking facilities that do not serve a particular building or facility, parking spaces complying with **502** shall be located on the shortest accessible route to an accessible pedestrian entrance of the parking facility.

* Rev. 7/18

EXCEPTIONS:

1. All van parking spaces shall be permitted to be grouped on one level within a multi-story parking facility.
2. Parking spaces shall be permitted to be located in different parking facilities if substantially equivalent or greater accessibility is provided in terms of distance from an accessible entrance or entrances, parking fee, and user convenience.

Total Number of Parking Spaces Provided in Parking Facility	Minimum Number of Required Accessible Parking Spaces		
	Accessible Parking Spaces	Van-Accessible Parking Spaces	Total Accessible & Van-Accessible Parking Spaces
1 to 25	0	1	1
26 to 50	1	1	2
51 to 75	2	1	3
76 to 100	3	1	4
101 to 150	4	1	5
151 to 200	5	1	6
201 to 300	5	2	7
301 to 400	6	2	8
401 to 500	7	2	9
501 to 1000	9	2	11 (2% percent of total) *
1001 and over	20, plus 1 for each 100, or fraction thereof, over 1000	1 for each 6 Accessible Spaces, or fraction 6	

TABLE A(1)-2-2

OFF-STREET AND PARK-AND-RIDE LOT PARKING SPACES

Source: *2010 ADA Standards for Accessible Design dated September 15, 2010 Chapter 5: Parking Spaces – United States Access Board*

* Rev. 1/19

ACCESSIBLE PARKING SPACES

Accessible parking spaces should be located where the street has the least crown and grade and close to key destinations. *

See FIGURES A(1)-2-8**,** A(1)-2-9, A(1)-2-10 and A(1)-2-11 that illustrate different combinations of Accessible Parking Spaces and Access Aisles that will accommodate cars, trucks and vans.

Accessible parking spaces shall be identified and designated as reserved by signs and markings displaying the International Symbol of Accessibility. For information on Signing and Marking Accessible Parking Spaces see **502.6 Identification** in this section.

R209 Passenger Loading Zones and Bus Stops

R209.1 General. Passenger loading zones shall be provided in accordance with **209**.

R209.2 Type. Where provided, passenger loading zones shall comply with **209.2**.

209.2.1 Passenger Loading Zones. Passenger loading zones, except those required to comply with **209.2.2** and **209.2.3**, shall provide at least one passenger loading zone complying with **503** in every continuous 100 linear feet (30 m) of loading zone space, or fraction thereof.

503.5 Vertical Clearance. Vehicle pull-up spaces, access aisles serving them, and a vehicular route from an entrance to the passenger loading zone, and from the passenger loading zone to a vehicular exit shall provide a vertical clearance of 9.5 feet minimum.

R209.2.2 Bus Loading Zones. bus loading zones restricted to use by designated or specified public transportation vehicles, each bus bay, bus stop, or other area designated for lift or ramp deployment shall comply with **810.2**.

Advisory 209.2.2 Bus Loading Zones. The terms "designated public transportation" and "specified public transportation" are defined by the Department of Transportation at 49 CFR 37.3 in regulations implementing the Americans with Disabilities Act. These terms refer to public transportation services provided by public or private entities, respectively. For example, designated public transportation vehicles include buses and vans operated by public transit agencies, while specified public transportation vehicles include tour and charter buses, taxis and limousines, and hotel shuttles operated by private entities.

R502 Parking Spaces

R502.1 General. Car and van parking spaces shall comply with **502**. Where parking spaces are marked with lines, width measurements of parking spaces and access aisles shall be made from the centerline of the markings.

---

* Rev. 7/18

EXCEPTION: Where parking spaces or access aisles are not adjacent to another parking space or access aisle, measurements shall be permitted to include the full width of the line defining the parking space or access aisle.

R502.2 Vehicle Spaces. Car parking spaces shall be 8 feet wide minimum and van parking spaces shall be 11 feet wide minimum, shall be marked to define the width, and shall have an adjacent access aisle complying with **502.3**. See FIGURE A(1)-2-6.

EXCEPTION: Van parking spaces shall be permitted to be 8 feet wide minimum where the access aisle is 8 feet wide minimum. See FIGURE A(1)-2-7.

See FIGURES A(1)-2-8, A(1)-2-9, A(1)-2-10 and A(1)-2-11 that illustrate different combinations of Accessible Parking Spaces and Access Aisles that will accommodate cars, trucks and vans.

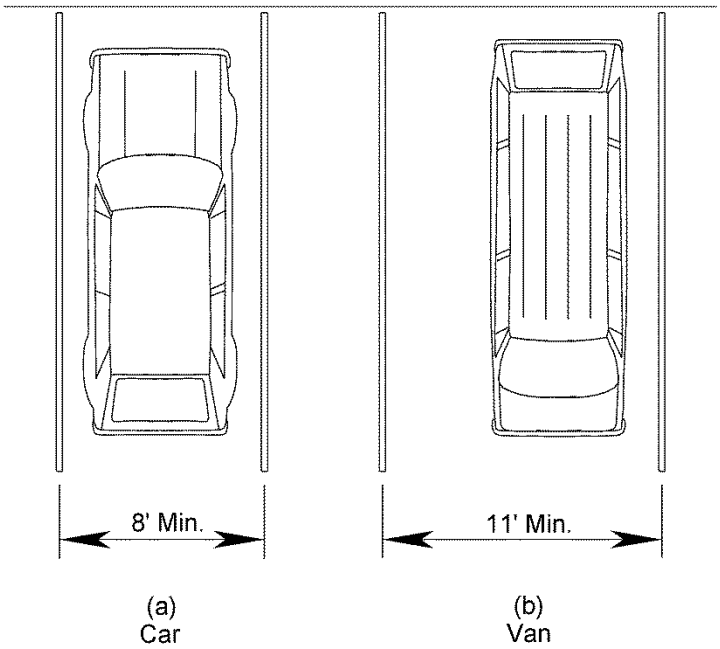

FIGURE A(1)-2-6
VEHICLE (CAR AND VAN) PARKING SPACES (R502.2) *

* Rev. 1/15

502.3 Access Aisle. Access aisles serving parking spaces shall comply with **502.3**. Access aisles shall adjoin an accessible route. Two parking spaces shall be permitted to share a common access aisle.

Advisory R309.4 Curb Ramps or Blended Transitions. Curb ramps or blended transitions complying with R304 shall connect the access aisle to the pedestrian access route. Curbs shall not be located within the access aisle.*

Advisory 502.3 Access Aisle. Accessible routes must connect parking spaces to accessible entrances. In parking facilities where the accessible route must cross vehicular traffic lanes, marked crossings enhance pedestrian safety, particularly for people using wheelchairs and other mobility aids. Where possible, it is preferable that the accessible route not pass behind parked vehicles.

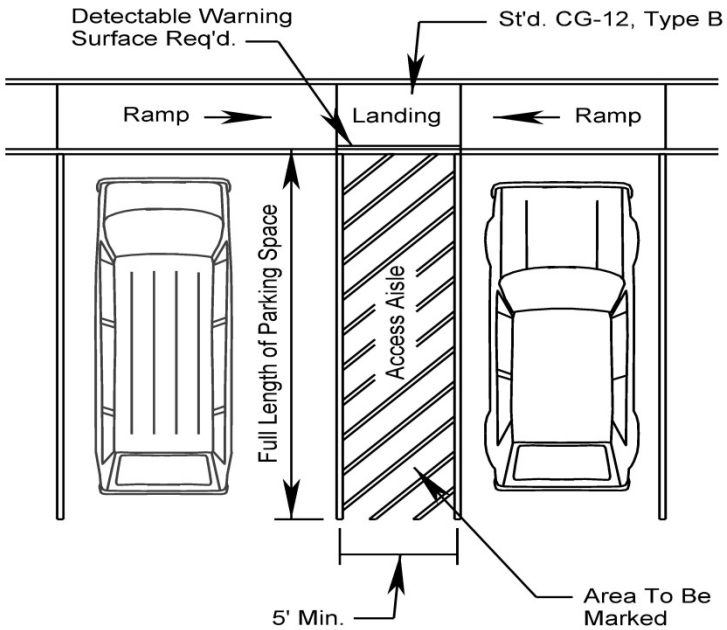

FIGURE A(1)-2-7 PARKING SPACE ACCESS AISLE (502.3)

502.3.1 Width. Access aisles serving car and van parking spaces shall be 5 feet wide minimum.

502.3.2 Length. Access aisles shall extend the full length of the parking spaces they serve.

502.3.3 Marking. Access aisles shall be marked so as to discourage parking in them.

Advisory 502.3.3 Marking. The method and color of marking are not specified by these requirements but may be addressed by State or local laws or regulations. Because these requirements permit the van access aisle to be as wide as a parking space, it is important that the aisle be clearly marked.

For information on signing and marking Accessible Parking Spaces, see Traffic Engineering Division Memorandum IIM-TE-284.

* Rev. 1/20

502.3.4 Location. Access aisles shall not overlap the vehicular way. Access aisles shall be permitted to be placed on either side of the parking space except for angled van parking spaces which shall have access aisles located on the passenger side of the parking spaces.

Location (Advisory 502.3.4) Wheelchair lifts typically are installed on the passenger side of vans. Many drivers, especially those who operate vans, find it more difficult to back into parking spaces than to back out into comparatively unrestricted vehicular lanes. For this reason, where a van and car share an access aisle, consider locating the van space so that the access aisle is on the passenger side of the van space.

See FIGURES A(1)-2-8, A(1)-2-9, A(1)-2-10 and A(1)-2-11 below that illustrate different combinations of Accessible Parking Spaces and Access Aisles that will accommodate cars, trucks and vans.

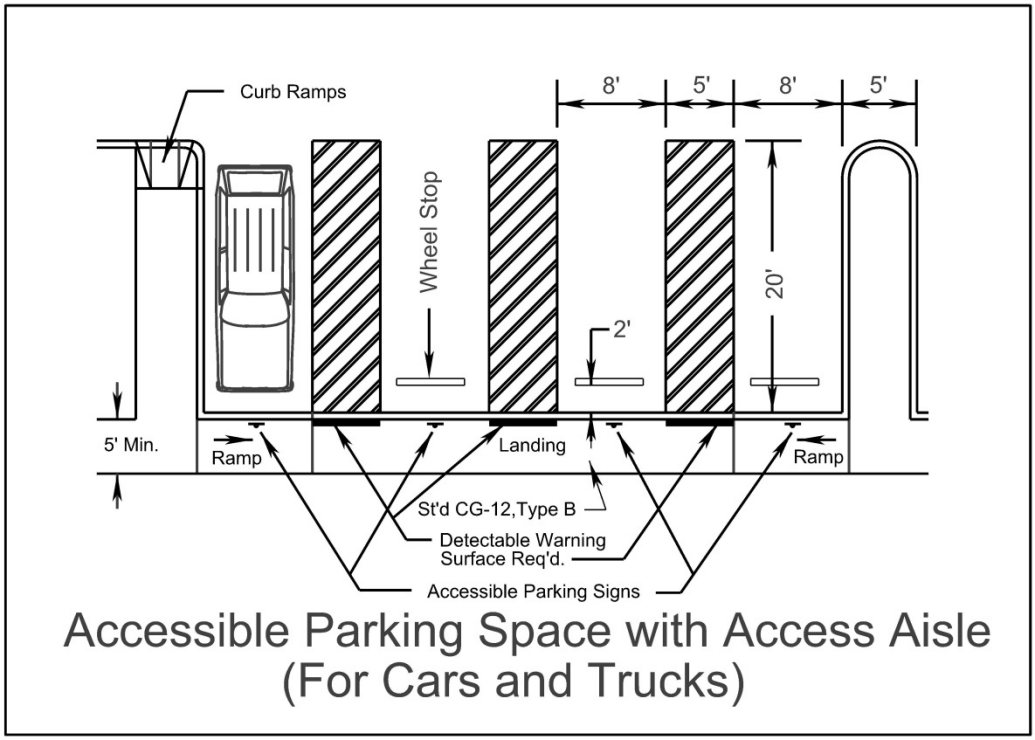

FIGURE A(1)-2-8

ACCESSIBLE PARKING SPACE WITH ACCESS AISLE FOR CARS AND TRUCKS*

Note: Wheel stops are required when parking spaces (accessible or otherwise) are located adjacent to sidewalk / pedestrian accessible route and shall be located a minimum of 2 feet from the face of curb, so that the parked vehicle does **not** encroach into and reduce the usable width of the sidewalk / pedestrian accessible route. See Figures A(1)-2-3 and A(1)-2-8 thru 2-11.

* Rev. 1/17

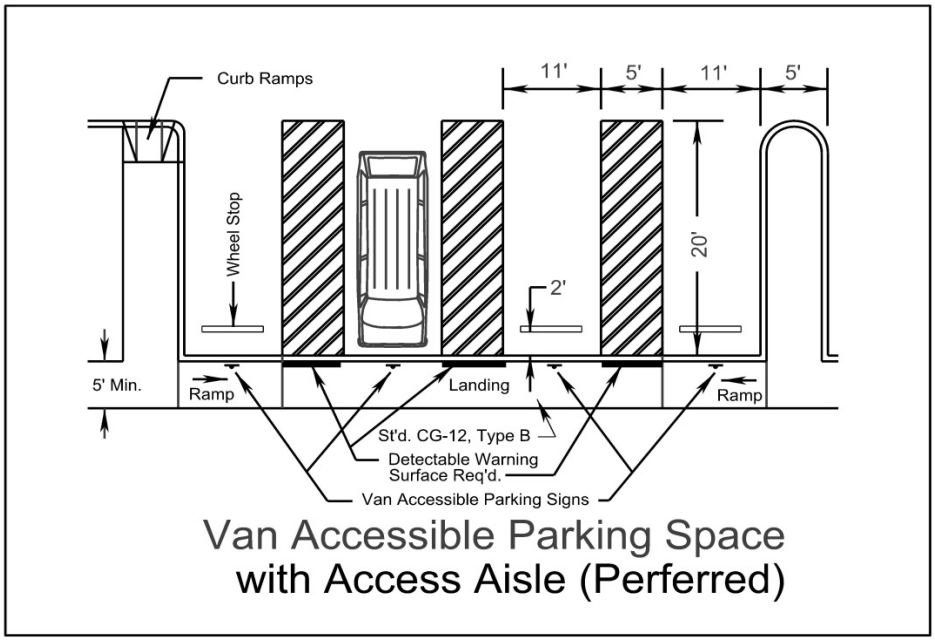

EXCEPTION: Van parking spaces shall be permitted to be 8 feet wide minimum where the access aisle is 8 feet wide minimum.

FIGURE A(1)-2-9

VAN ACCESSIBLE PARKING SPACE WITH ACCESS AISLE (PERFERRED)

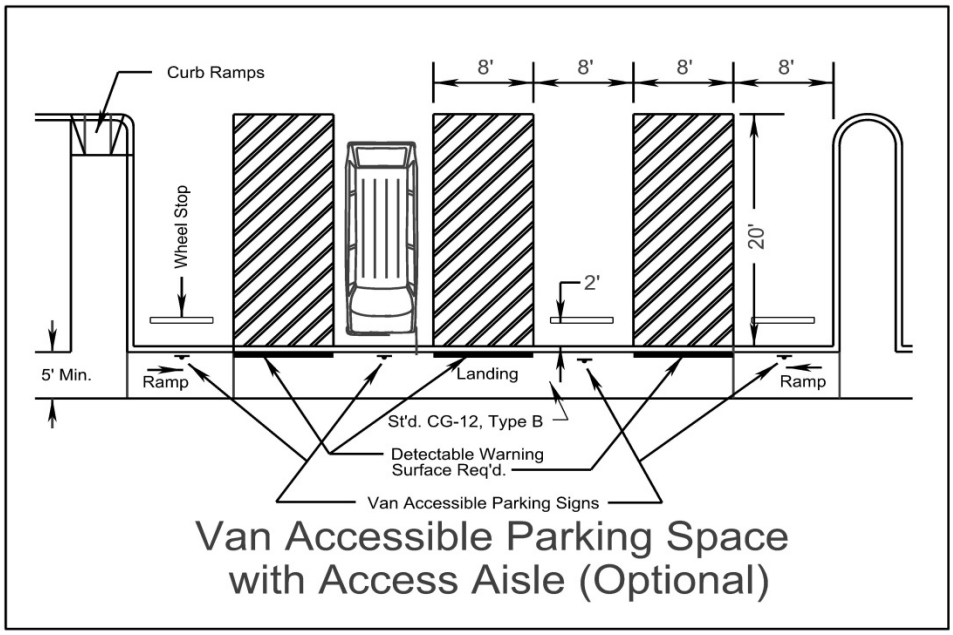

FIGURE A(1)-2-10

VAN ACCESSIBLE PARKING SPACE WITH ACCESS AISLE (OPTIONAL) *

* Rev. 1/17

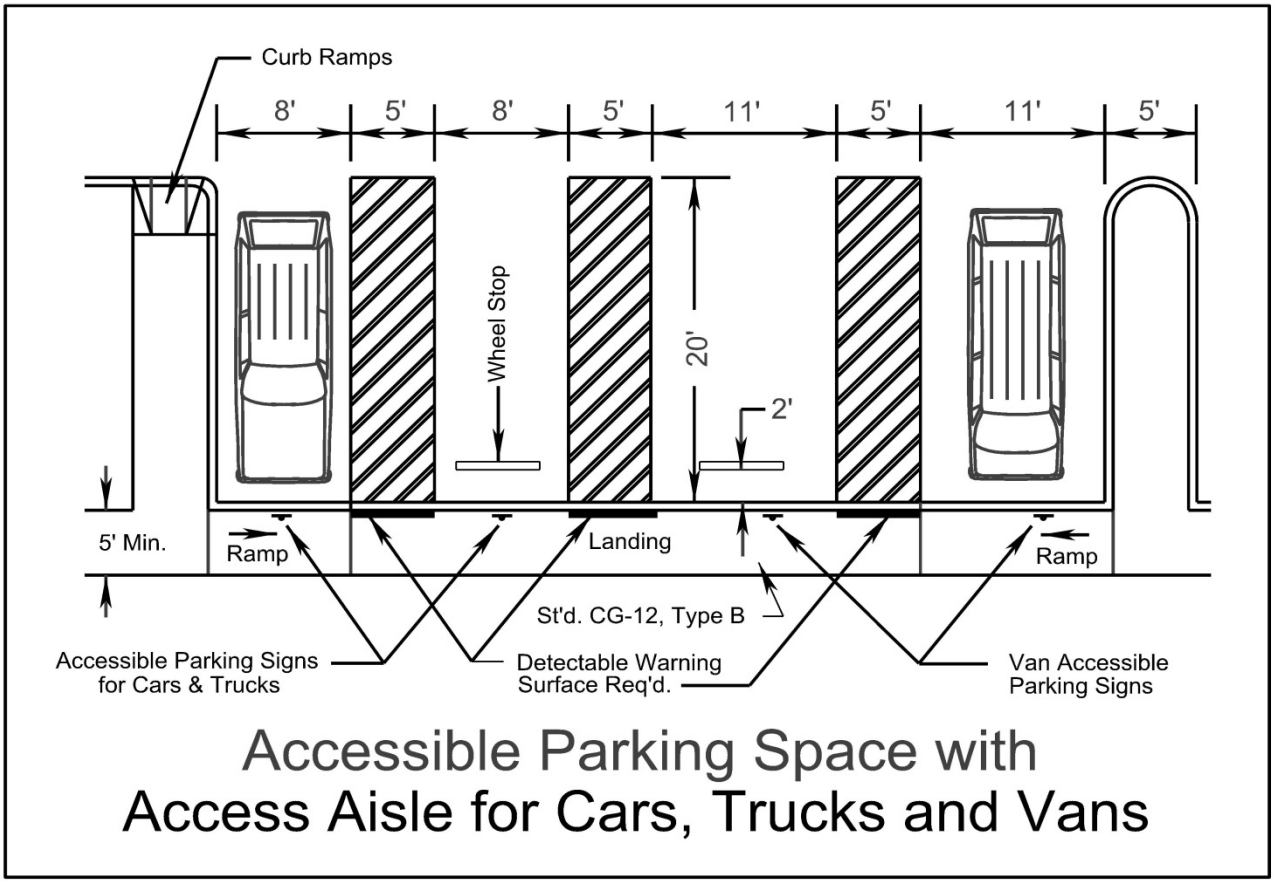

FIGURE A(1)-2-11

ACCESSIBLE PARKING SPACE WITH ACCESS AISLE FOR CARS, TRUCKS AND VANS (PERFERRED)

502.4 Floor or Ground Surfaces. Parking spaces and access aisles serving them shall comply with **302**. Access aisles shall be at the same level as the parking spaces they serve. Changes in level are not permitted. *

EXCEPTION: Slopes not steeper than 1:48 shall be permitted.

Advisory 502.4 Floor or Ground Surfaces. Access aisles are required to be nearly level in all directions to provide a surface for wheelchair transfer to and from vehicles. The exception allows sufficient slope for drainage. Built-up curb ramps are not permitted to project into access aisles and parking spaces because they would create slopes greater than 1:48

502.5 Vertical Clearance. Parking spaces for vans and access aisles and vehicular routes serving them shall provide a vertical clearance of 8 feet 2 inches minimum.

* Rev. 7/18

Advisory 502.5 Vertical Clearance. Signs provided at entrances to parking facilities informing drivers of clearances and the location of van accessible parking spaces can provide useful customer assistance.*

502.6 Identification. Parking space identification signs shall include the International Symbol of Accessibility (see below) complying with **703.7.2.1** and the *MUTCD*, Chapter 3. Signs identifying van parking spaces shall contain the designation "van accessible." Signs shall be 5 feet minimum above the finish floor or ground surface measured to the bottom of the sign. Such signs shall be located so they cannot be obscured by a vehicle parked in the space.

Accessible Parking Spaces shall be identified and designated as reserved by signs and markings displaying the International Symbol of Accessibility. Van accessible spaces shall have an additional sign "Van-Accessible" mounted below the International Symbol of Accessibility. Such signs shall be located so they cannot be obscured by a vehicle parked in the space.

For information on signing and marking Accessible Parking Space, see Traffic Engineering Memorandum IIM-TE-284.

For additional information, see *ADA Compliance Brief: Restriping Parking Spaces*

502.7 Relationship to Accessible Routes. Parking spaces and access aisles shall be designed so that cars and vans, when parked, cannot obstruct the required clear width of adjacent accessible routes.

Advisory 502.7 Relationship to Accessible Routes. Wheel stops are an effective way to prevent vehicle overhangs from reducing the clear width of accessible routes.

503 Passenger Loading Zones.

503.1 General. Passenger loading zones shall comply with **503**.

503.2 Vehicle Pull-Up Space. Passenger loading zones shall provide a vehicular pull-up space 8 feet wide minimum and 20 feet long minimum.

* Rev. 7/18

503.3 Access Aisle. Passenger loading zones shall provide access aisles complying with **503** adjacent to the vehicle pull-up space. Access aisles shall adjoin an accessible route and shall not overlap the vehicular way. *

503.3.1 Width. Access aisles serving vehicle pull-up spaces shall be 5 feet wide minimum.

503.3.2 Length. Access aisles shall extend the full length of the vehicle pull-up spaces they serve.

503.3.3 Marking. Access aisles shall be marked so as to discourage parking in them.

For information on signing and marking Accessible Parking Space, see Traffic Engineering Memorandum IIM-TE-284.

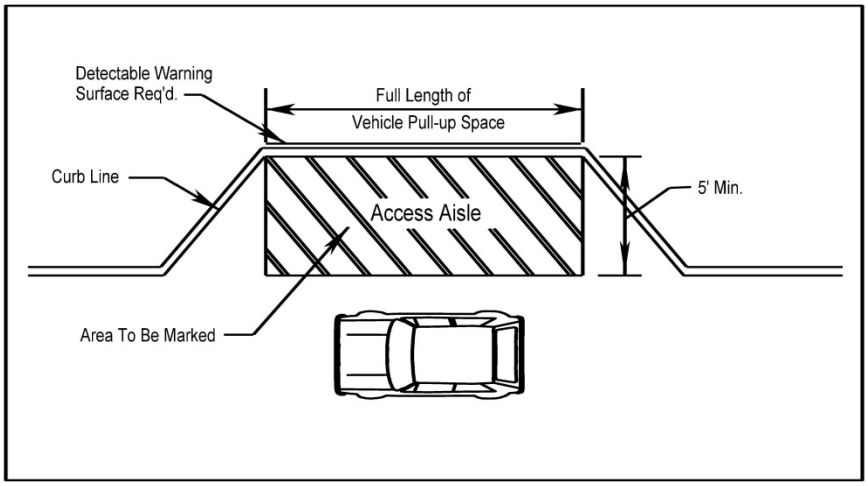

FIGURE A(1)-2-12

PASSENGER LOADING ZONE ACCESS AISLE

503.4 Floor and Ground Surfaces.

Vehicle pull-up spaces and access aisles serving them shall comply with **302**. Access aisles shall be at the same level as the vehicle pull-up space they serve. Changes in level are not permitted.

EXCEPTION: Slopes not steeper than 1:48 shall be permitted.

503.5 Vertical Clearance.

Vehicle pull-up spaces, access aisles serving them, and a vehicular route from an entrance to the passenger loading zone and from the passenger loading zone to a vehicular exit shall provide a vertical clearance of 9.5 feet minimum.

* Rev. 7/18

REST AREAS

Design guides for safety rest areas are shown on FIGURE A(1)-2-15. Rest areas along the roadways are functional and desirable elements on heavily traveled roads and on those carrying recreational traffic. They are a part of the complete highway development provided for the safety and convenience of the roadway users. The design and location of rest areas depends much on the character and volume of traffic, type of highway and adjacent land use and should consider the scenic quality of the area, accessibility and adaptability to development. Other essential considerations include an adequate source of water and a means to treat and/or properly dispose of sewage. Site plans should be developed by the use of a comprehensive site planning process that should include the location of ramps, parking areas, buildings, picnic areas, water supply, sewage treatment facilities and maintenance areas. The objective is to give maximum weight to the appropriateness of the site rather than adherence to constant distance or driving time between sites.

Principles of ramp terminal design apply generally at the points of access to or from these areas. The designer is to refer to Section C-8 in this Appendix for the design of ramp terminal and speed change lane design criteria. FIGURES A(1)-2-13 and A(1)-2-15 are to be used as guides for the selection of the parking space arrangement for cars and trucks. Parking spaces and access aisles shall be designed with surface slopes not to exceed 2% in all directions.

For information on the number of Accessible Parking Spaces required and Accessible Parking Space dimensions, see Park-and-Ride Lots in this Appendix.

For information on the dimensions of accessible parking spaces, see Park-and Ride Lots in the this Appendix. Accessible parking spaces shall be identified by signs displaying the International Symbol of Accessibility. For information on parking space signing and marking, see Traffic Engineering Memorandum IIM-TE-284. Accessible parking spaces should be located where the street has the least crown and grade and close to key destinations.

Parked vehicle overhangs shall not reduce the clear width of an accessible route (overhang distance 2 feet), which shall be accomplished by the installation of wheel stops as shown in FIGURE A(1)-2-3. Accessible parking spaces shall be designated as reserved by a sign showing the International Symbol of Accessibility. Van accessible spaces shall have an additional sign "Van-Accessible" mounted below the symbol of accessibility. Such signs shall be located so they cannot be obscured by a vehicle parked in the space. For information on parking space signing and markings, see Traffic Engineering Memorandum IIM-TE-284. Provide minimum vertical clearance of 9.5 feet at accessible passenger loading zones and along at least one vehicle access route to such areas from site entrance(s) and exit(s).

For additional information, see *ADA Compliance Brief: Restriping Parking Spaces*[*]

[*] Rev. 7/18

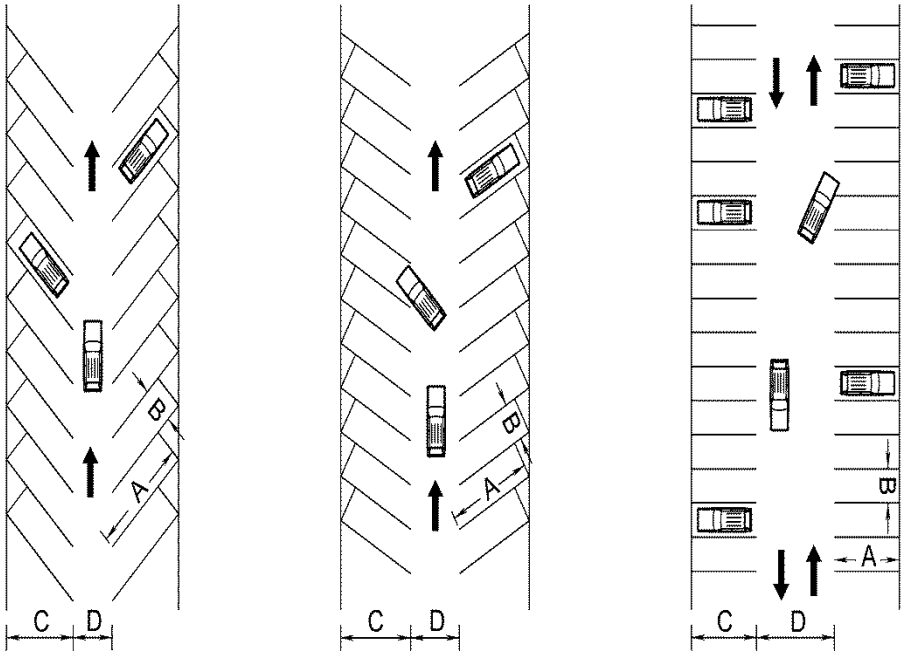

45° Parking 60° Parking 90° Parking

	45° Parking	60° Parking	*90° Parking With Wheel Stops	90° Parking Without Wheel Stops
A	29 ft.	25 ft.	20 ft.	18 ft.
B	9 ft.	9 ft.	9 ft.	9 ft.
C	21 ft.	22 ft.	20 ft.	18 ft.
D	12 ft.	15 ft.	26 ft.	24 ft.

NOTES: All dimensions shown are minimums.
Greater aisle widths may be desirable to accomodate:
- Winter weather conditions.
- High number of turning movements associated with short term parking.
- Through traffic.

* Wheel stops are required when parking spaces are located perpendicular to the sidewalk, See Note under Figure A(1)-2-3

FIGURE A(1)-2-13

PARKING SPACE DESIGN AND ARRANGEMENT FOR PARKING LOTS AND PARK & RIDE LOTS*

* Rev. 7/19

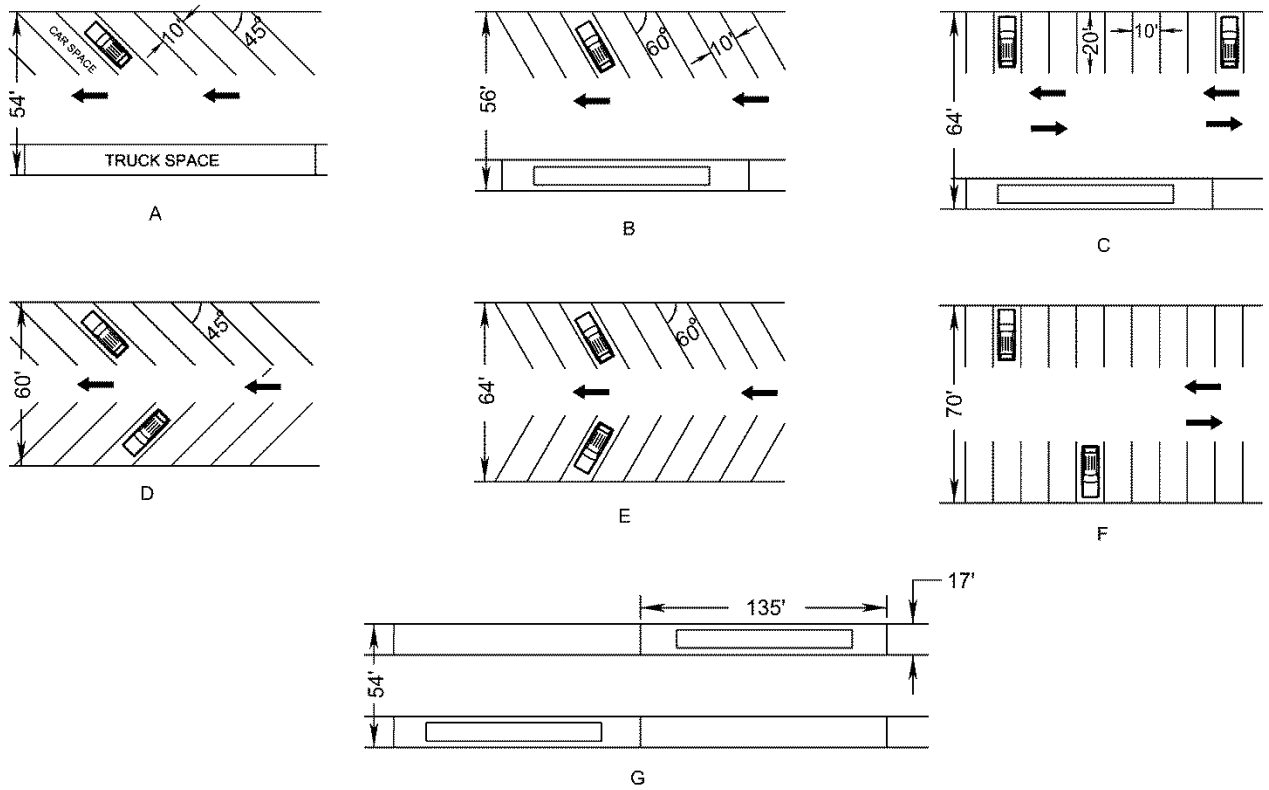

SUMMARY OF PARKING SPACE ARRANGEMENTS

Central Roadway	Type of Vehicle and Angle of Parking		Total Width Parking Area	Number Vehicles per 120 linear feet	
	Left	Right	(feet)	Left	Right
A One-way	Trucks-parallel	Cars-45^0	54	2	8
B One-way	Trucks-parallel	Cars-60^0	56	2	9
C Two-way	Trucks-parallel	Cars-90^0	64	2	12
D One-way	Cars-45^0	Cars-45^0	60	8	8
E One-way	Cars-60^0	Cars-60^0	64	9	9
F Two-way	Cars-90^0	Cars-90^0	70	12	12
G One-way	Trucks-parallel	Trucks-parallel	54	2	2

FIGURE A(1)-2-14

PARKING SPACE DESIGN AND ARRANGEMENT FOR REST AREAS*

* Rev. 7/15

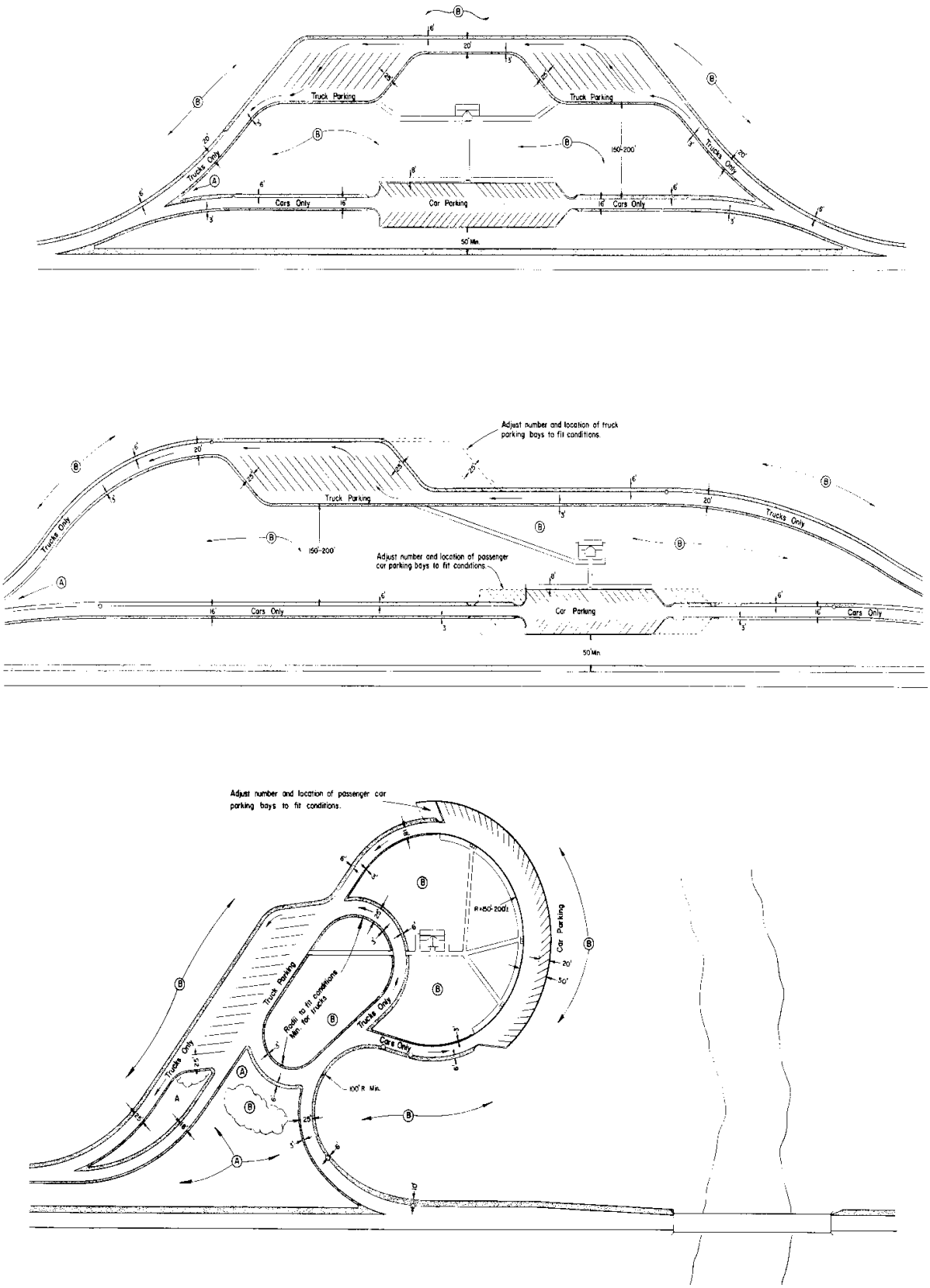

FIGURE A(1)-2-15

EXAMPLES OF SITE LAYOUTS FOR REST AREAS

A. Denotes areas to be cleared, grubbed, graded, top soiled, and seeded.

B. Denotes areas NOT to be cleared and grubbed except for areas within roadway and parking area construction limits

NOTE: See FIGURE A(1)-2-13* for Parking Space Design and Arrangement.

Source: AASHTO *Guide for Development of Rest Areas on Major Arterial and Freeways*, 3rd Edition.

NOTES

Design types are to receive the approval of the Environmental Division.

Individual radii; length of ramps; individual ramp configuration, etc. are to be designed to fit the individual site conditions.

Design and dimensions shown are approximate only.

Well and septic drainage field locations are to be recommended by the District Environmental Manager. Testing and approval of soil conditions are to be obtained by the Environmental Division through the appropriate County and State agencies. Additional right of way for drain field should be acquired if necessary.

The proposed right of way limits should be discussed with the Environmental Division after preparation of the plan and grade lines in order that adequate area for required facilities will be obtained.

A single line of fence in median is to be specified if opposite rest areas are accessible, or if medians can be readily crossed by pedestrians. This fence should extend between points a minimum of 200 feet beyond ramp noses. Fencing in outer separator may be required because of site requirements.

Perimeter of rest area to be fenced unless otherwise recommended by the field party.

A note similar to the following is to be shown on the rest area detail sheet of all grading and drainage plans:

"No trees or shrub outside the limits of the rest area roadway construction are to be cut without the approval of the Regional Landscape Architect."

* Rev. 7/15

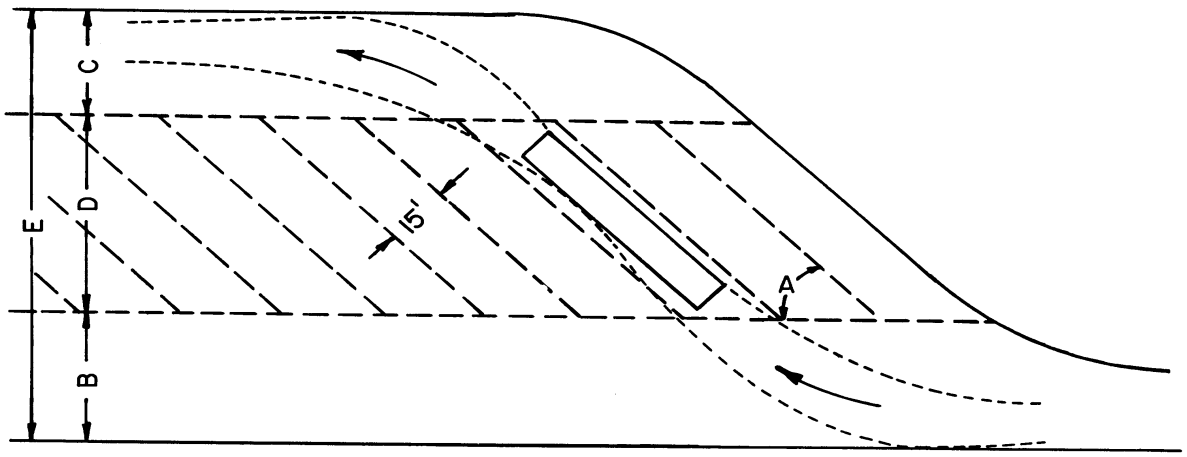

LEGEND

A - ANGLE OF PARKING
B - ENTRANCE ROADWAY WIDTH
C - EXIT ROADWAY WIDTH
D - PARKING WIDTH
E - TOTAL WIDTH

DIMENSIONS FOR PARKING SPACES

ANGLE OF PARKING (DEGREES) A	ENTRANCE ROADWAY WIDTH (FEET) B	EXIT ROADWAY WIDTH (FEET) C	PARKING AREA WIDTH (FEET) D	TOTAL WIDTH PARKING AREA (FEET) E	NUMBER OF TRUCKS PARKED (PER ACRE)
30	20	20	54	94	11
45	30	30	69	124	16
60	40*	40	79	149	16

FIGURE A(1)-2-16 PARKING SPACE DESIGN FOR ANGLE PARKING OF TRUCKS

For additional information, see the most recent AASHTO's *Guide for the Design of Park-and-Ride Facilities*.

* Rev. 7/15

SECTION A(1)-3 TRANSIT (BUS) FACILITIES DESIGN CRITERIA

In July 2014, AASHTO released the *Guide for Geometric Design of Transit Facilities on Highways and Streets*. This guide provides a single, comprehensive reference of current practices in the geometric design of transit facilities and streets and highways. The facilities covered include: local buses, express buses, and bus rapid transit operating in mixed traffic, bas lanes, and high-occupancy (HOV) lanes, and bus-only roads within street and freeway environments, and street cars and Light Rail Transit (LRT) running in mixed traffic and transit lanes, and within medians along arterial roadways.

In April 2016, NACTO released the *Transit Street Design Guide*, which highlights as the centerpiece of transformative street projects such a shared transit streets and transit boulevards. In August 2016, *ITE released an ITE Application Supplement to the NACTO Transit Street Design Guide* to provide insight on how the Guide fits with other accepted practices that currently exist within the industry, addresses key application issues including traffic signals, use of street space, analysis techniques/performance measures, and provides case studies.

BUS TURNOUT (BUS STOP) DESIGN: LOCATION, TYPE AND DIMENSIONS

Turnout Locations (Far-Side, Near-Side and Mid-Block)*

The **Far-Side** of an intersection is the preferred location for turnouts (Bus Bay). A **Far-Side** turnout is superior to the **Mid-Block** turnout because it reduces walking distances for bus transfers, encourages patrons to use intersection crosswalks, and reduces right of way acquisition. **Near-Side** turnouts should be avoided because of conflicts with right turning vehicles, delays to transit service as buses attempt to re-enter the travel lane, and obstruction of pedestrian activity as well as traffic control devices. The exception would be where buses would use a right turn lane as a queue jump lane associated with a bus signal priority treatment at an intersection (where a Far-Side turnout is not possible). **Mid-Block** turnout locations are the least preferred unless associated with key pedestrian access to a major transit-oriented activity center.

* Rev. 1/17

Types of Turnouts (Closed and Open)

Closed turnouts are typically located on the Far-Side at signalized intersections. The signal creates breaks in the flow of traffic to permit bus drivers to re-enter the travel lane. They are also provided a Mid-Block Bus Stops near major transit destinations with high passenger activity and longer-than-average stop time.

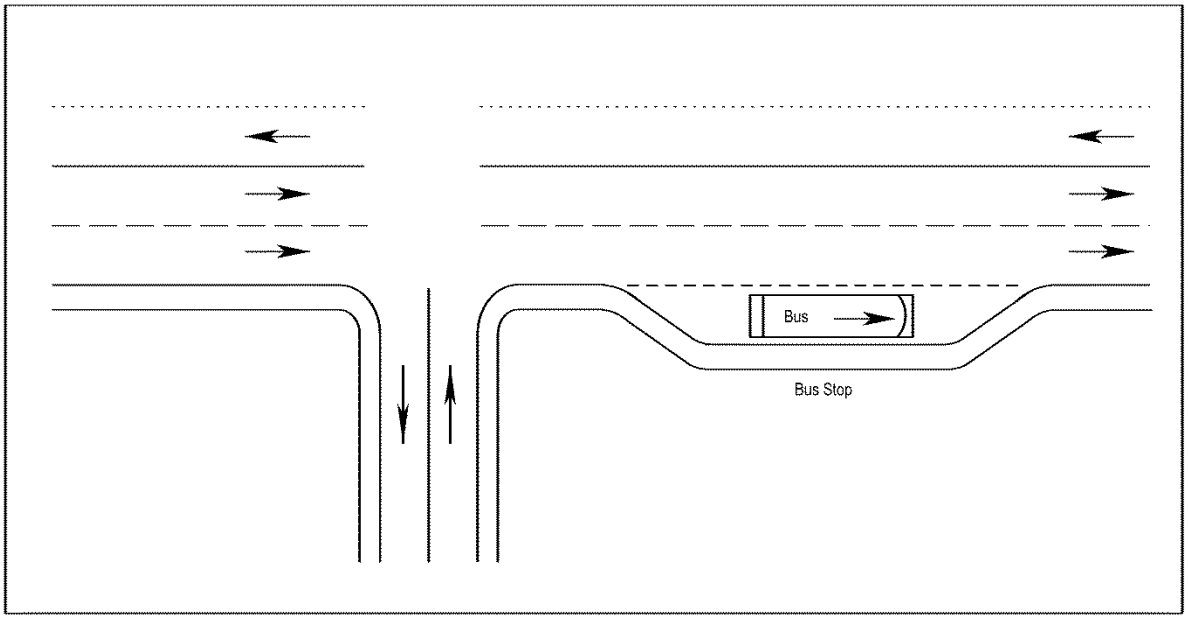

FIGURE A(1)-3-1 BUS TURNOUT ON FAR-SIDE (CLOSED)

Open turnouts are located on the Far-Side at signalized intersections at the beginning of a block and are open to upstream traffic. The bus driver can decelerate across the intersection and then move from the travel lane into the turnout. The signal creates breaks in the flow of traffic to permit bus drivers to re-enter the travel lane. This allows the bus to move efficiently into the turnout and to stop out of the flow of traffic. Major disadvantages include: (1) bus re-entry into the general traffic lane may be delayed by through traffic, and (2) passengers loading areas and pedestrian walking space may be compromised. Pedestrian walking distance to cross the intersection is increased because the intersection width is increased by the width of the bus turnout. The open bus turnout can create conflicts for right-turning vehicles from the cross street that use the bus turnout for acceleration.*

* Rev. 1/17

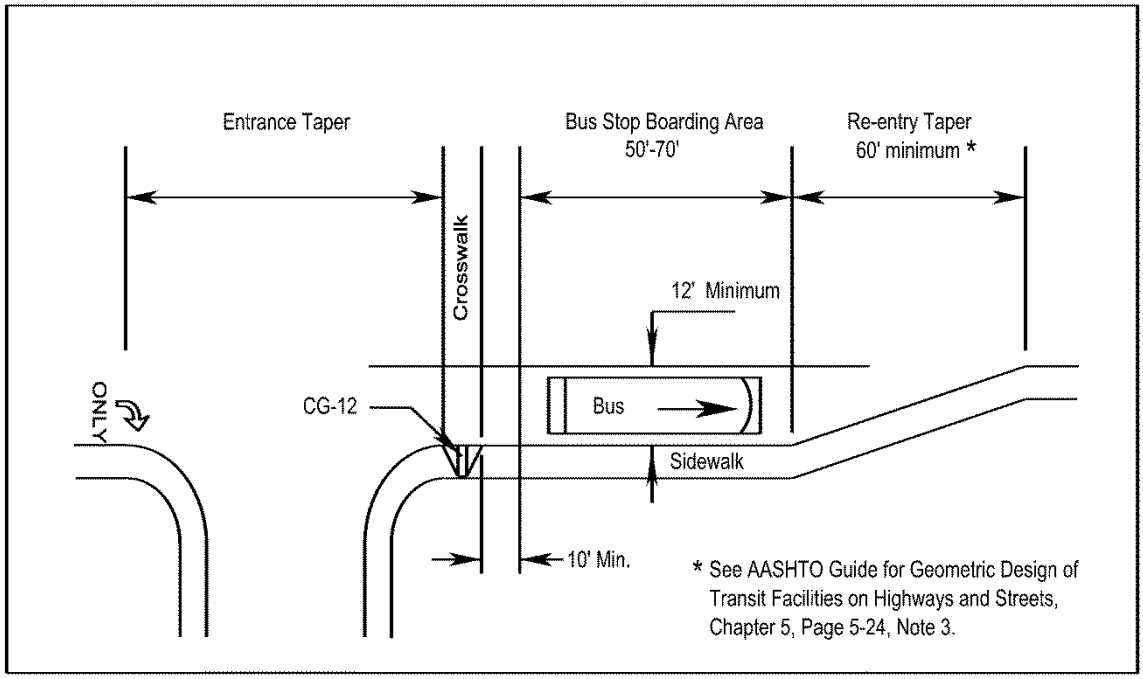

FIGURE A(1)-3-2 BUS TURNOUT ON FAR-SIDE (OPEN)*

Bus Turnout Dimensions:

1. The bus stop boarding area shall be 50 feet (min.) for each standard bus and 70 feet (min.) for each articulated bus expected to be at the stop at the same time.
2. The bus boarding area lane width shall be 12 feet (min.), excluding the gutter pan.

* Rev. 7/19

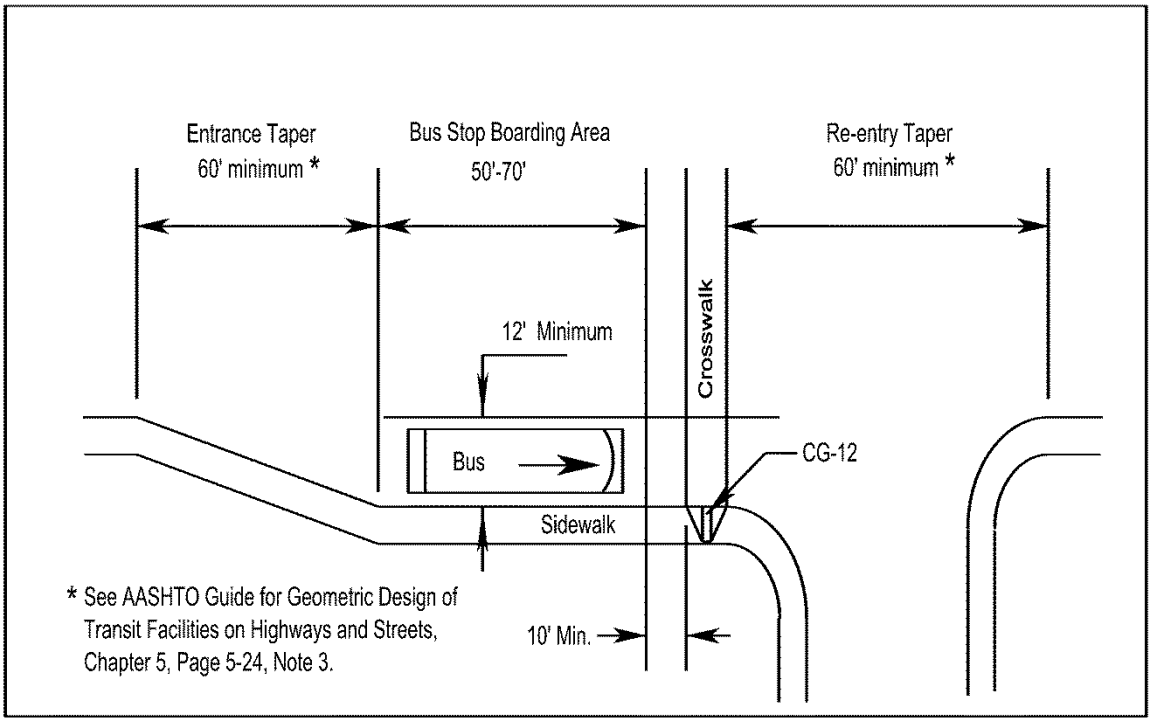

FIGURE A(1)-3-3 BUS TURNOUT ON NEAR-SIDE*

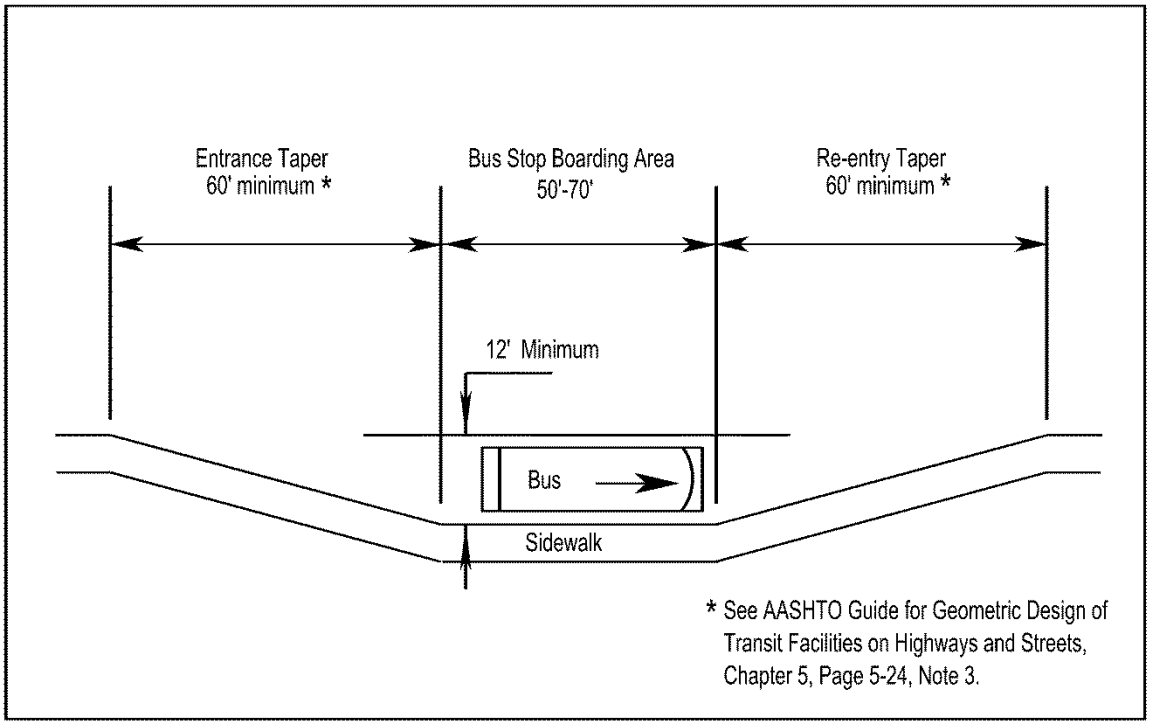

FIGURE A(1)-3-4 BUS TURNOUT ON MID-BLOCK

* Rev. 7/19

Bus Turnout Dimensions:

1. The bus stop boarding area shall* be 50 feet (min.) for each standard bus and 70 feet (min.) for each articulated bus expected to be at the stop at the same time.
2. The bus boarding area lane width shall be 12 feet (min.), excluding the gutter pan.

Sources:

1. AASHTO Green Book, Chapter 4, Section 4.19
2. AASHTO Guide for Geometric Design of Transit Facilities on Highways and Streets, Chapter 5
3. TCRP Project D-09 Task 7-4 Bus Pull-Outs, page 12
4. NACTO *Transit Street Design Guide,* Chapter 3

* Rev. 7/19

BUS (TRANSIT) STOPS, SHELTERS,BOARDING AND ALIGHTING AREAS, SIGNS AND BENCHES*

This information is from the *U.S. Access Board Proposed Guidelines for Pedestrian Facilities in the Public Right-of-Way* (PROWAG) dated July 26, 2011, Chapters R2 and R3.

R213 Transit Stops and Transit Shelters. Where provided, transit stops and transit shelters shall comply with **R308**.

Advisory R213 Transit Stops and Transit Shelters. Transit stops in the public right-of-way typically serve fixed route bus systems, including bus rapid transit systems, and light rail transit systems. Signs that identify the routes served by the transit stop must comply with the technical requirements for visual characters on signs unless audible sign systems or other technologies are used to provide the information (**see R211 and R410**). The Federal Highway Administration (FHWA) has issued guidance on the obligations of state transportation departments, metropolitan planning organizations, and transit agencies to coordinate the planning and funding of accessibility improvements to transit systems and facilities. The guidance is available at FHWA's website: http://www.fhwa.dot.gov/civilrights/memos/ada_memo_clarificationa.htm

R308 Transit Stops and Transit Shelters

R308.1 Transit Stops. Transit stops shall comply with R308.1.

Advisory R308.1 Transit Stops. Transit stops should be located so that there is a level and stable surface for boarding vehicles. Locating transit stops at signalized intersections increases the usability for pedestrian with disabilities. Where security bollards are installed at transit stops, they must not obstruct the clear space at boarding and alighting areas or reduce the required clear width at pedestrian access routes **(see R210).**

R308.1.1 Boarding and Alighting Areas. Boarding and alighting areas at sidewalk or street level transit stops shall comply with **R308.1.1** and **R308.1.3**. Where transit stops serve vehicles with more than one car, boarding and alighting areas serving each car shall comply with **R308.1.1** and **R308.1.3**.

Advisory R308.1.1 Boarding and Alighting Areas. Where a transit shelter is provided, the boarding and alighting area can be located either within (if shelter is open on all sides) or outside of the shelter.

R308.1.1.1 Dimensions. Boarding and alighting areas shall provide a clear length of 8 feet minimum, measured perpendicular to the curb or street or highway edge, and a clear width of 5 feet minimum, measured parallel to the street or highway.

---

* Rev. 1/17

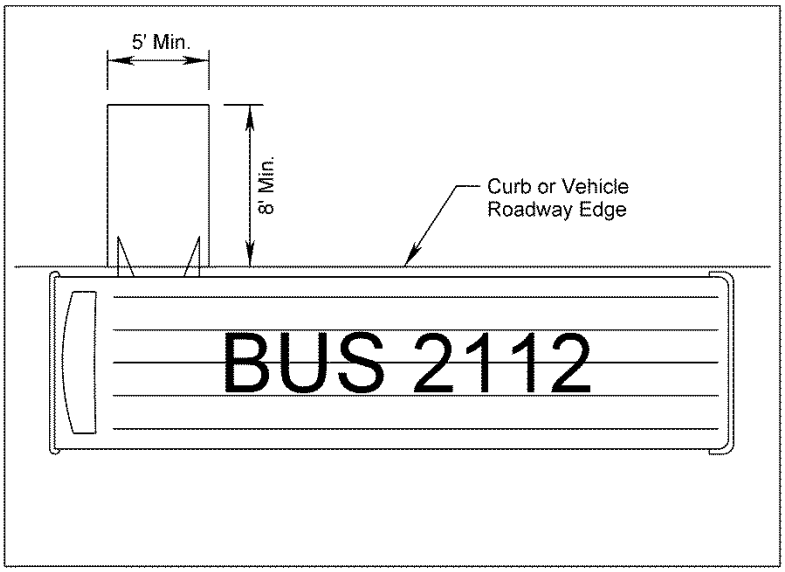

FIGURE A(1)-3-5 BOARDING AND ALIGHTING AREAS

R308.1.1.2 Grade. Parallel to the street or highway, the grade of boarding and alighting areas shall be the same as the street or highway, to the extent practicable. Perpendicular to the street or highway, the grade of boarding and alighting areas shall not be steeper than 2 percent.

R308.1.2 Boarding Platforms. Boarding platforms at transit stops shall comply with **R308.1.2** and **R308.1.3**. Boarding platforms shall be at least 8 feet wide, measured perpendicular to the curb or street or highway edge and at least 25 feet long, measured parallel to the street or highway. The boarding platform may need to be longer depending on the size, shape and orientation of the shelter and the number of waiting passengers, (See AASHTO Guide For Geometric Design of Transit Facilities on Highways and Streets, page 5-28, section 5.2.3.3).*

R308.1.2.1 Platform and Vehicle Floor Coordination. Boarding platforms shall be positioned to coordinate with vehicles in accordance with the applicable requirements in 49 CFR parts 37 and 38.

Advisory R308.1.2.1 Platform and Vehicle Floor Coordination. The Department of Transportation regulations (49 CFR parts 37 and 38) require the height of the vehicle floor and the station platform to be coordinated so as to minimize the vertical and horizontal gaps.

R308.1.2.2 Slope. Boarding platforms shall not exceed a slope of 2 percent in any direction. Where boarding platforms serve vehicles operating on existing track or existing street or highway, the slope of the platform parallel to the track or the street or highway is permitted to be equal to the grade of the track or street or highway.

R308.1.3 Common Requirements. Boarding and alighting areas and boarding platforms shall comply with **R308.1.3**.

---

* Rev. 1/20

R308.1.3.1 Surfaces. The surfaces of boarding and alighting areas and boarding platforms shall be firm, stable and slip resistant and comply with **R302.7**.

Advisory R308.1.3.1 Surfaces. Detectable warning surfaces are required at boarding and alighting areas for rail vehicles and at boarding platforms for buses and rail vehicles **(see R208)**.

R308.1.3.2 Connection. Boarding and alighting areas and boarding platforms shall be connected to streets, sidewalks, or pedestrian circulation paths by pedestrian access routes complying with **R302**.

R308.2 Transit Shelters. Transit shelters shall be connected by pedestrian access routes complying with **R302** to boarding and alighting areas or boarding platforms complying with **R308.1.** Transit shelters shall provide a minimum clear space (2.5 feet by 4 feet) complying with **R404** entirely within the shelter and not interfere with other persons using the seating. Where seating is provided within transit shelters, the clear space (2.5 feet minimum by 4 feet minimum) shall be located either at one end of a seat or shall not overlap the area (1.5 feet) from the front edge of the seat. Environmental controls within transit shelters shall be proximity-actuated. Protruding objects within transit shelters shall comply with **R402**.

Advisory R308.2 Transit Shelters. The clear space of 2.5 feet minimum by 4 feet minimum must be located entirely within the transit shelter and not interfere with other persons using the seating.

Note: Bus (Transit) Shelters are considered an Occupiable Space / Building and require a Building Permit. See Chapter 2B of this Manual for more details. *

R211.3 Transit Signs. Signs that identify the routes served by transit stops shall comply with **R410**.

Advisory R211.3 Transit Signs. Transit schedules, timetables, and maps are not required to comply with **R410**.

R212.6 Benches. At least 50 percent, but no less than one, of benches at each location shall provide clear space (2.5 feet by 4 feet) complying with **R404** adjacent to the bench. The clear space shall be located either at one end of the bench or shall not overlap the area within 1.5 feet from the front edge of the bench. Benches at tables are not required to comply.

Advisory R212.6 Benches. Benches that provide full back support and armrests to assist in sitting and standing are more usable by pedestrians with disabilities.

* Rev. 7/17

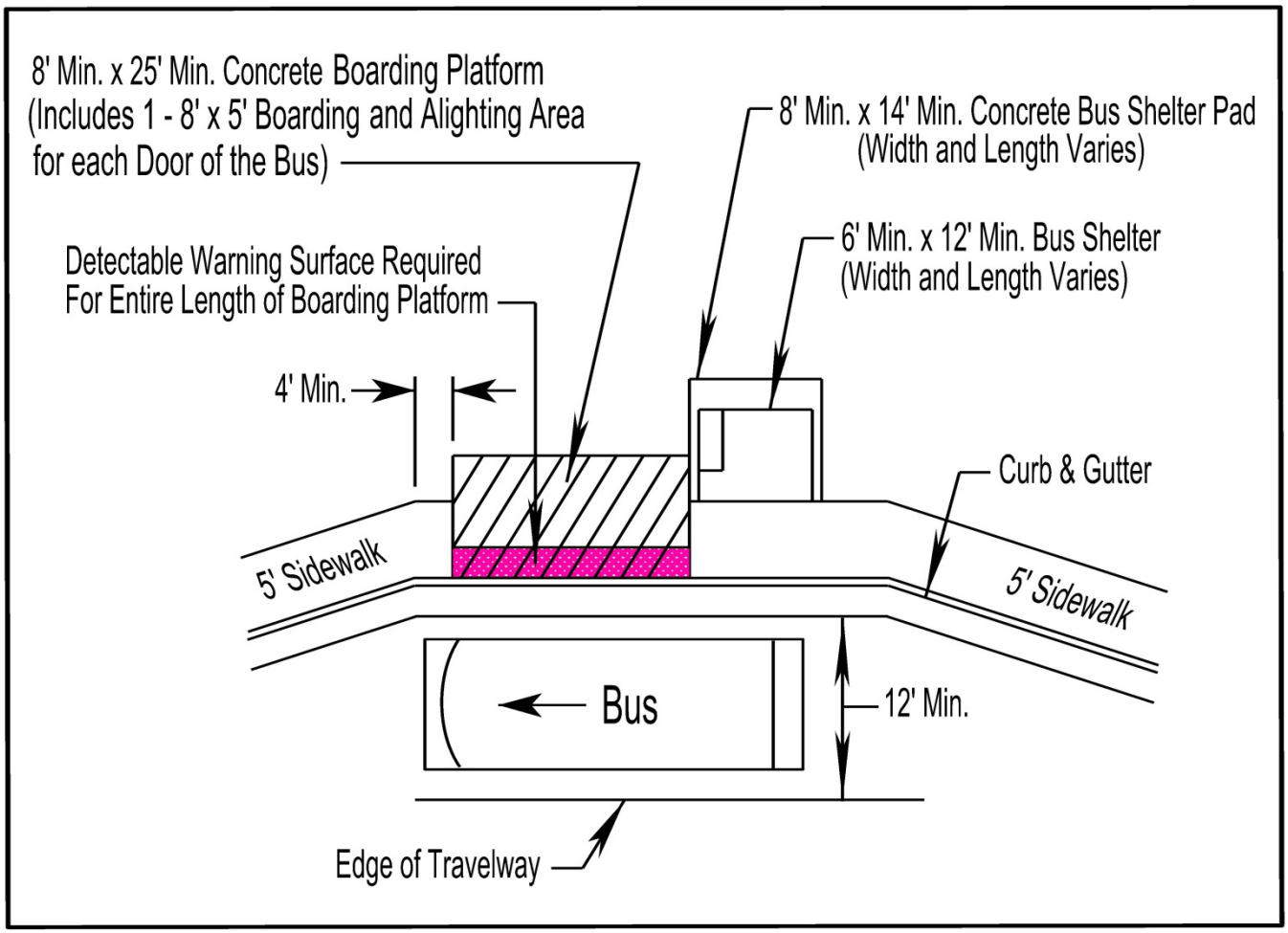

FIGURE A(1)-3-6 ELEMENTS AND DIMENSIONS ASSOCIATED WITH BUS (TRANSIT) STOPS*

* Rev. 1/20

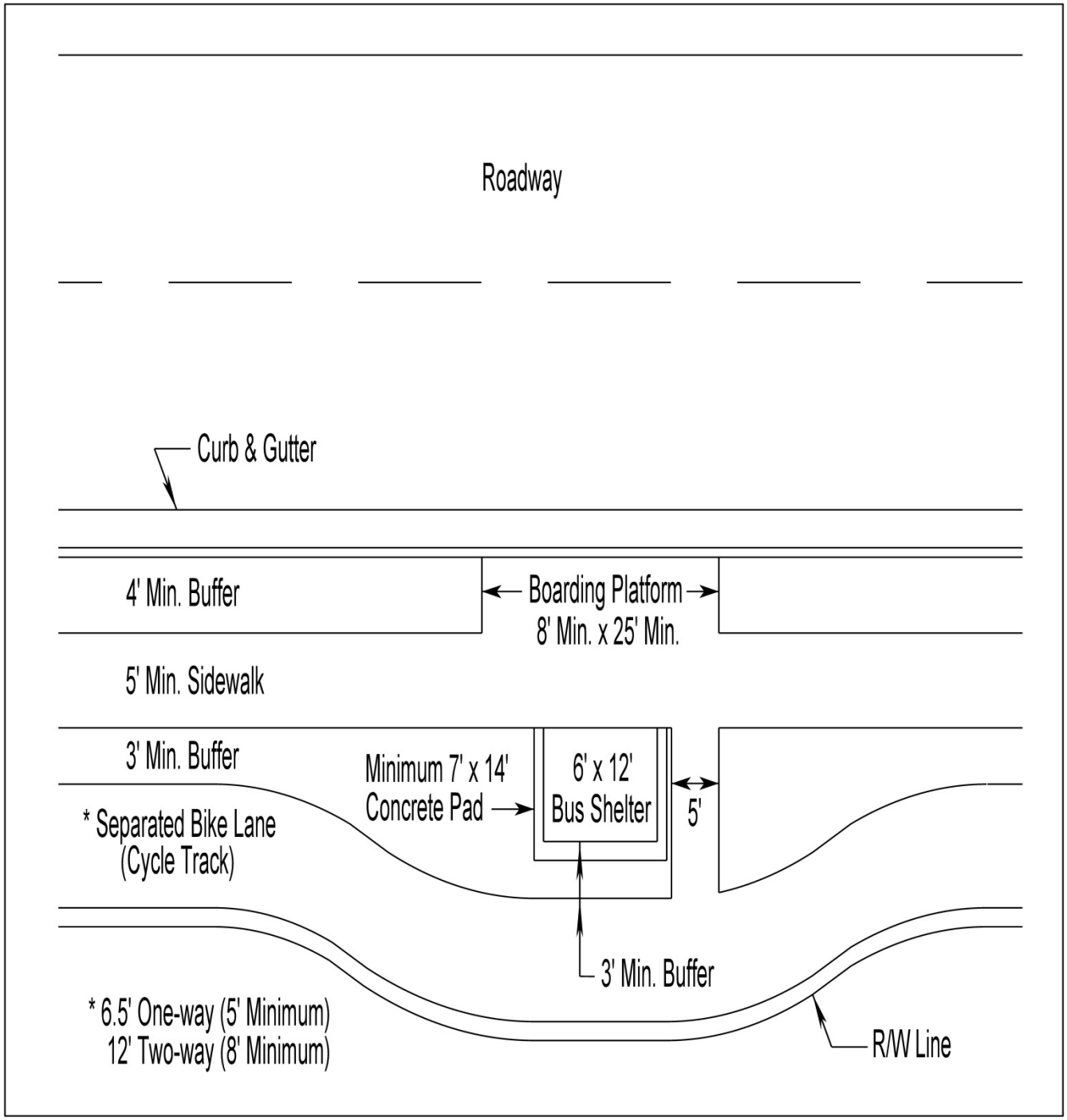

FIGURE A(1)-3-7 OFF ROAD SEPARATED BIKE LANE WITH SIDEWALK*

* Rev. 1/20

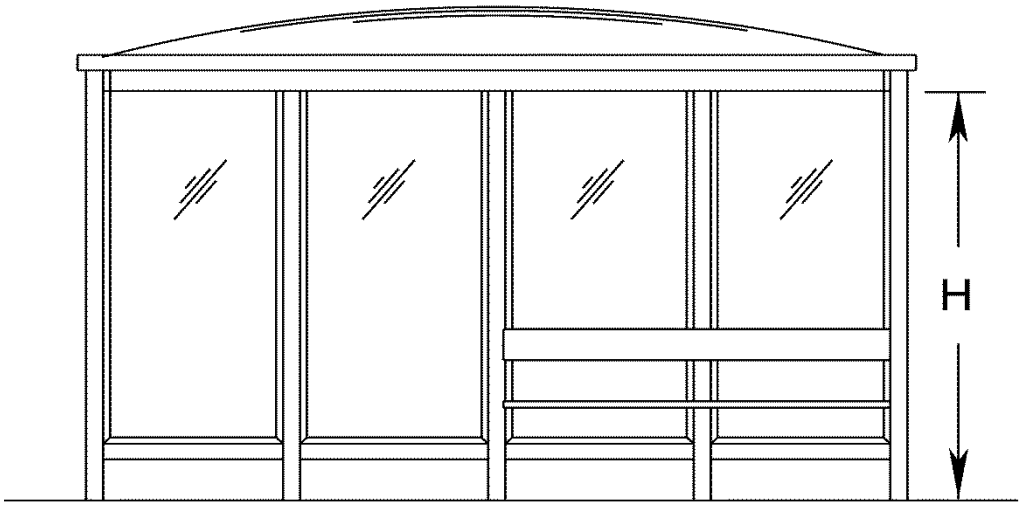

FRONT ELEVATION

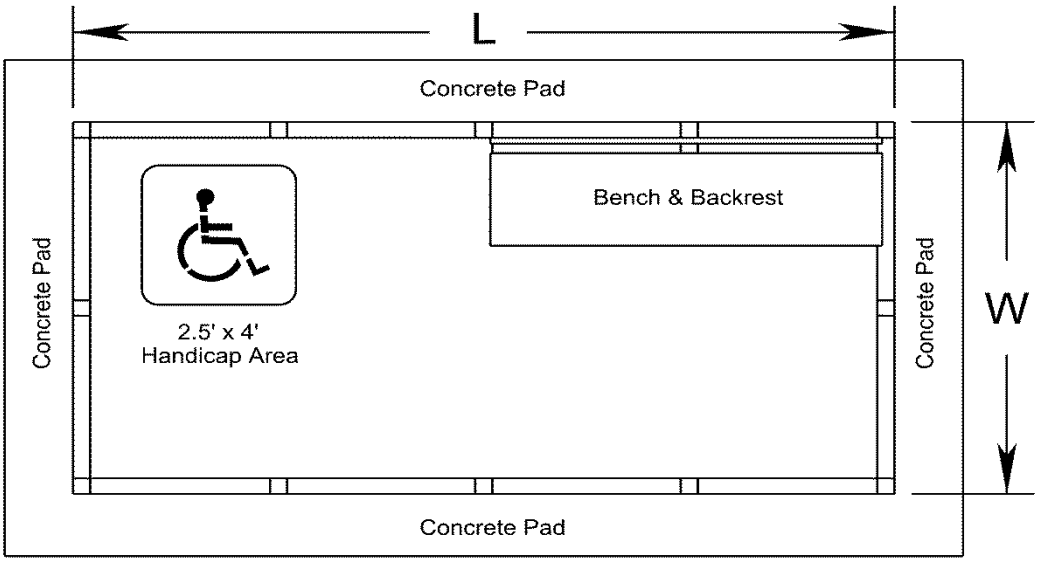

FLOOR PLAN

Notes:

1. Width and Length of Shelter Varies.
2. Concrete Pad is to be wider and longer than shelter demensions.

FIGURE A(1)-3-8 TYPICAL BUS (TRANSIT) SHELTER*

* Rev. 7/18

TRANSPORTATION FACILITIES (RAIL PLATFORMS, STATION SIGNS)

**This information is from the U.S. Access Board ADA Standards, Chapter 8, which can be accessed at*
https://www.access-board.gov/guidelines-and-standards/buildings-and-sites/about-the-ada-standards/ada-standards**

https://www.access-board.gov/guidelines-and-standards/transportation/facilities/ada-standards-for-transportation-facilities

810 Transportation Facilities

Transportation Facilities shall comply with **810**.

810.5 Rail Platforms. Rail platforms shall comply with **810.5**.

810.5.1 Slope. Rail platforms shall not exceed a slope of 1:48 in all directions.

EXCEPTION: Where platforms serve vehicles operating on existing track or track laid in existing roadway, the slope of the platform parallel to the track shall be permitted to be equal to the slope (grade) of the roadway or existing track.

810.5.2 Detectable Warnings. Platform boarding edges not protected by platform screens or guards shall have detectable warnings complying with **705** along the full length of the public use area of the platform.

810.5.3 Platform and Vehicle Floor Coordination. Station platforms shall be positioned to coordinate with vehicles in accordance with the applicable requirements of 36 CFR part 1192. Low-level platforms shall be 8 inches minimum above top of rail. In light rail, commuter rail, and intercity rail systems where it is not operationally or structurally feasible to meet the horizontal gap or vertical difference requirements of part 1192 or 49 CFR part 38, mini-high platforms, car-borne or platform-mounted lifts, ramps or bridge plates or similarly manually deployed devices, meeting the requirements of 49 CFR part 38, shall suffice.

EXCEPTION: Where vehicles are boarded from sidewalks or street-level, low-level platforms shall be permitted to be less than 8 inches.

Advisory 810.5.3 Platform and Vehicle Floor Coordination. The height and position of a platform must be coordinated with the floor of the vehicles it serves to minimize the vertical and horizontal gaps, in accordance with the ADA Accessibility Guidelines for Transportation Vehicles (36 CFR Part 1192). The vehicle guidelines, divided by bus, van, light rail, rapid rail, commuter rail, intercity rail, are available at www.access-board.gov. The preferred alignment is a high platform, level with the vehicle floor. In some cases, the vehicle guidelines permit use of a low platform in conjunction with a lift or ramp. Most such low platforms must have a minimum height of eight inches above the top of the rail. Some vehicles are designed to be boarded from a street or the sidewalk along the street and the exception permits such boarding areas to be less than eight inches high.

---

* Rev. 7/18

810.6 Rail Station Signs. Rail station signs shall comply with **810.6**.

EXCEPTION: Signs shall not be required to comply with **810.6.1** and **810.6.2** where audible signs are remotely transmitted to hand-held receivers, or are user or proximity-actuated.

Advisory 810.6 Rail Station Signs Exception. Emerging technologies such as an audible sign systems using infrared transmitters and receivers may provide greater accessibility in the transit environment than traditional Braille and raised letter signs. The transmitters are placed on or next to print signs and transmit their information to an infrared receiver that is held by a person. By scanning an area, the person will hear the sign. This means that signs can be placed well out of reach of Braille readers, even on parapet walls and on walls beyond barriers. Additionally, such signs can be used to provide wayfinding information that cannot be efficiently conveyed on Braille signs.

810.6.1 Entrances. Where signs identify a station or its entrance, at least one sign at each entrance shall comply with **703.2** and shall be placed in uniform locations to the maximum extent practicable. Where signs identify a station that has no defined entrance, at least one sign shall comply with **703.2** and shall be placed in a central location.

810.6.2 Routes and Destinations. Lists of stations, routes and destinations served by the station which are located on boarding areas, platforms, or mezzanines shall comply with **703.5**. At least one tactile sign identifying the specific station and complying with **703.2** shall be provided on each platform or boarding area. Signs covered by this requirement shall, to the maximum extent practicable, be placed in uniform locations within the system.

EXCEPTION: Where sign space is limited, characters shall not be required to exceed 3 inches.

Advisory 810.6.2 Routes and Destinations. Route maps are not required to comply with the informational sign requirements in this document.

810.6.3 Station Names. Stations covered by this section shall have identification signs complying with **703.5**. Signs shall be clearly visible and within the sight lines of standing and sitting passengers from within the vehicle on both sides when not obstructed by another vehicle.

Advisory 810.6.3 Station Names. It is also important to place signs at intervals in the station where passengers in the vehicle will be able to see a sign when the vehicle is either stopped at the station or about to come to a stop in the station. The number of signs necessary may be directly related to the size of the lettering displayed on the sign.

810.7 Public Address Systems. Where public address systems convey audible information to the public, the same or equivalent information shall be provided in a visual format. *

* Rev. 1/17