Virginia Department of Transportation

John G. Lewis Memorial Bridge over Catoctin Creek

Project Location

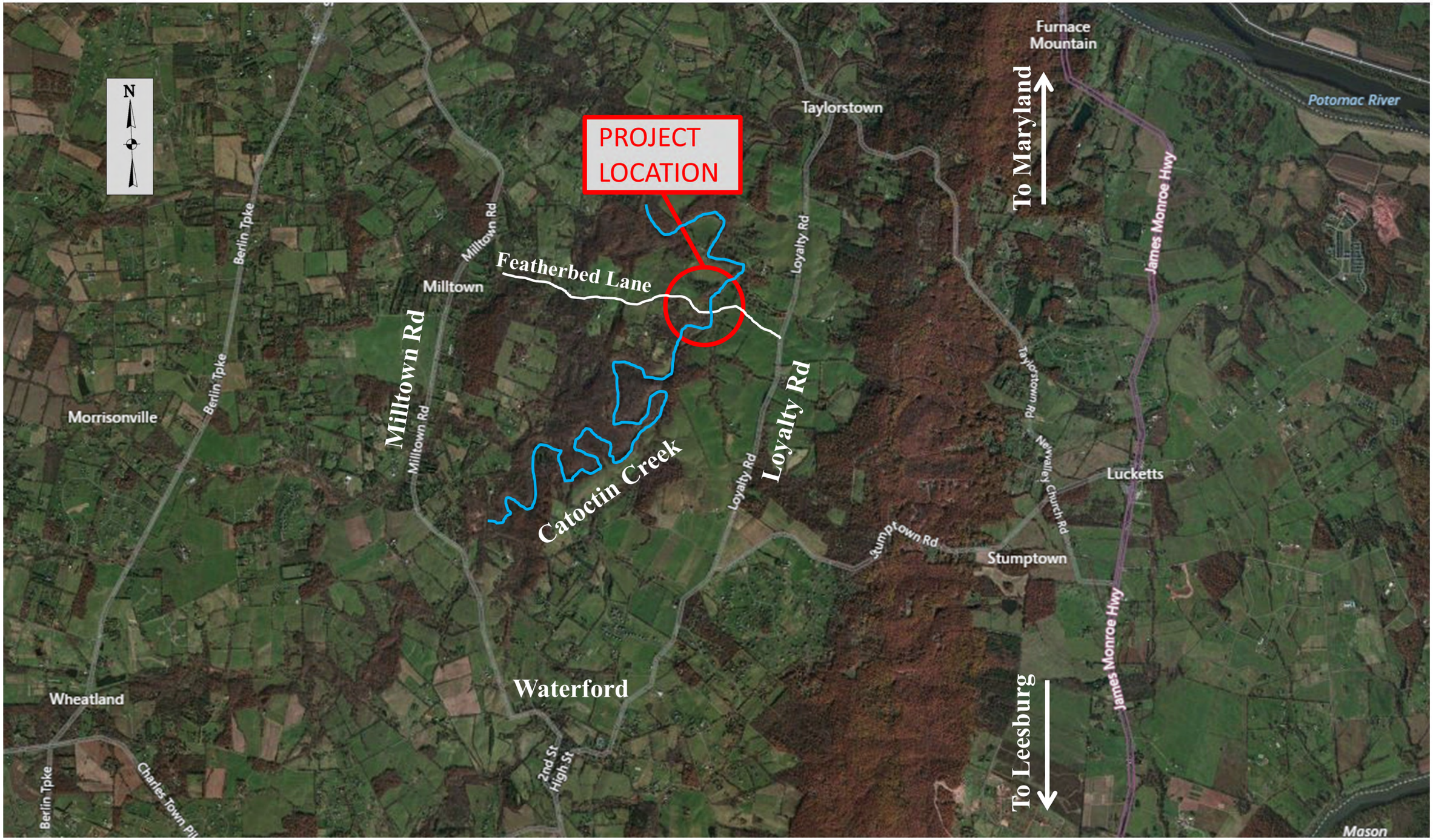

December 5, 2018

Virginia Department of Transportation

John G. Lewis Memorial Bridge over Catoctin Creek

Two-Span Steel Beam Bridge with Glu-Lam Timber Deck and Existing Truss

December 5, 2018

Virginia Department of Transportation

John G. Lewis Memorial Bridge over Catoctin Creek

Project Overview

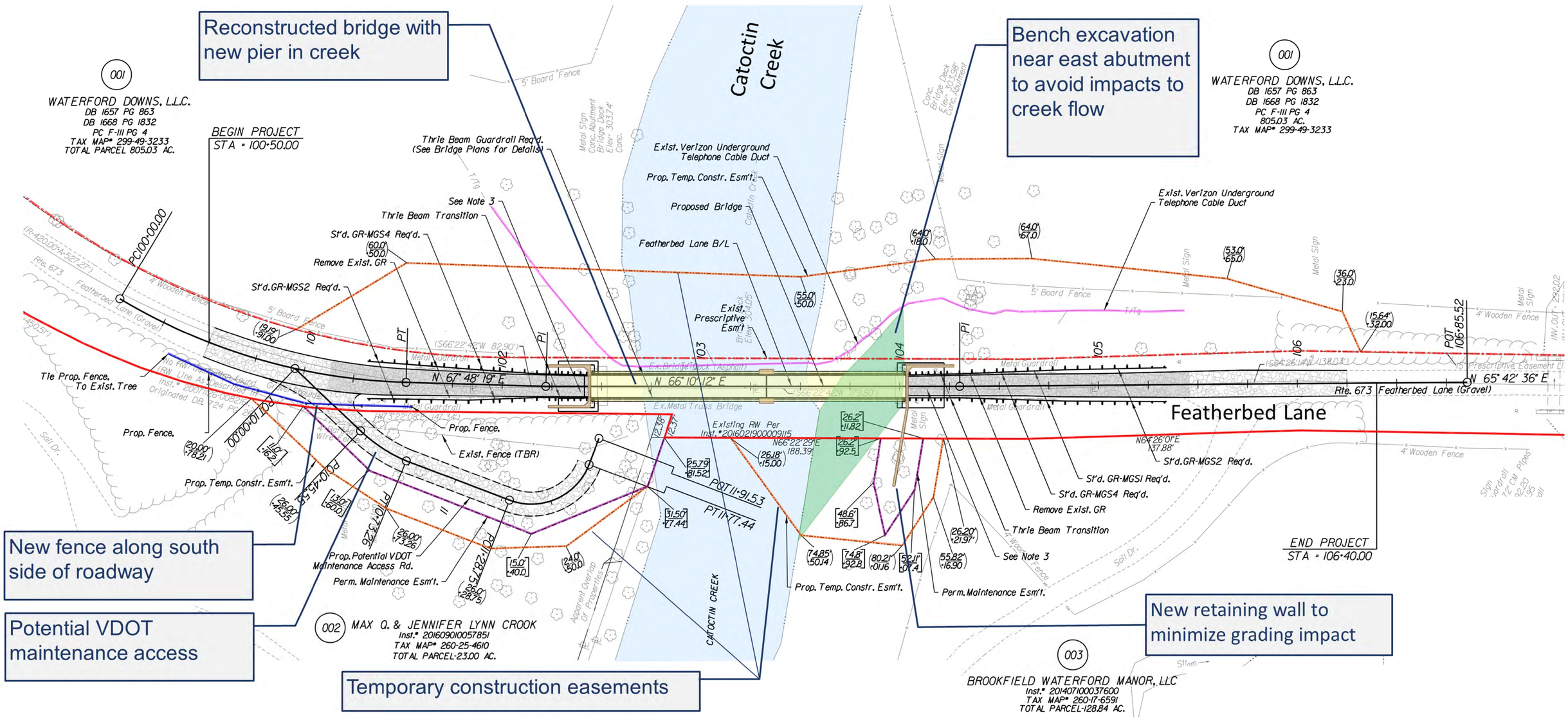

Proposed Public Hearing Plans

December 5, 2018

Virginia Department of Transportation

John G. Lewis Memorial Bridge over Catoctin Creek

Two-Span Steel Beam Bridge with Glu-Lam Timber Deck and Existing Truss

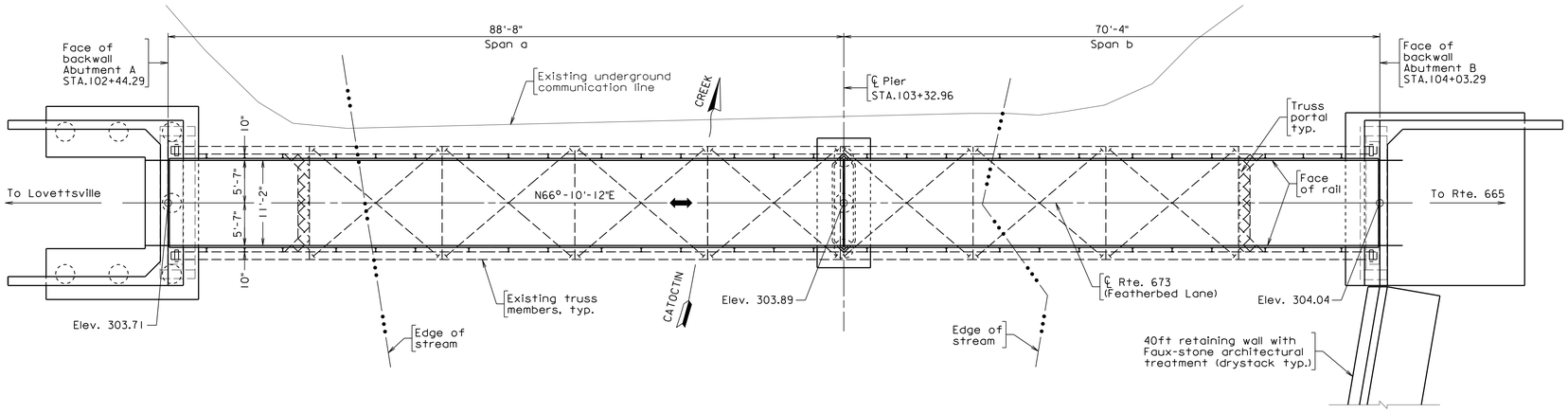

PROPOSED PLAN

Scale: ⅛" = 1'-0"

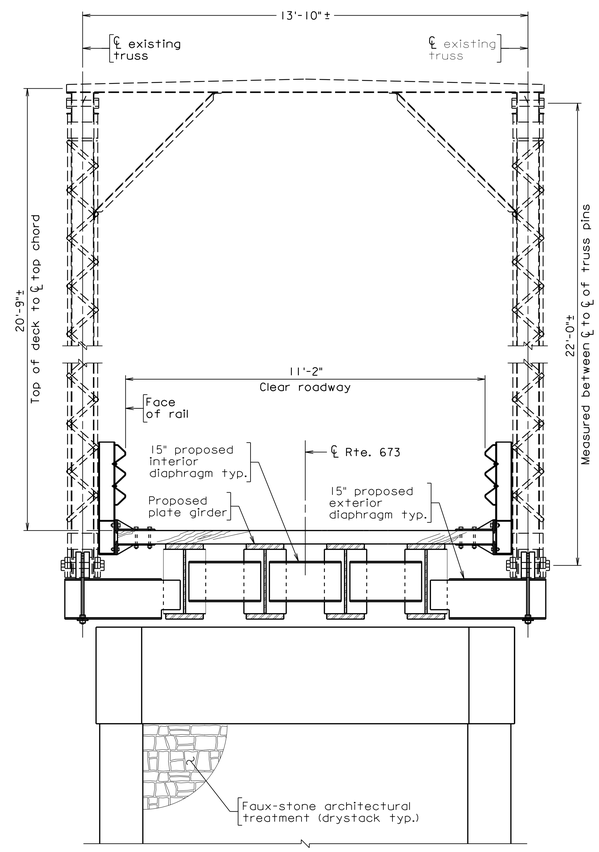

TYPICAL SECTION AT PIER

Scale: ½" = 1'-0"

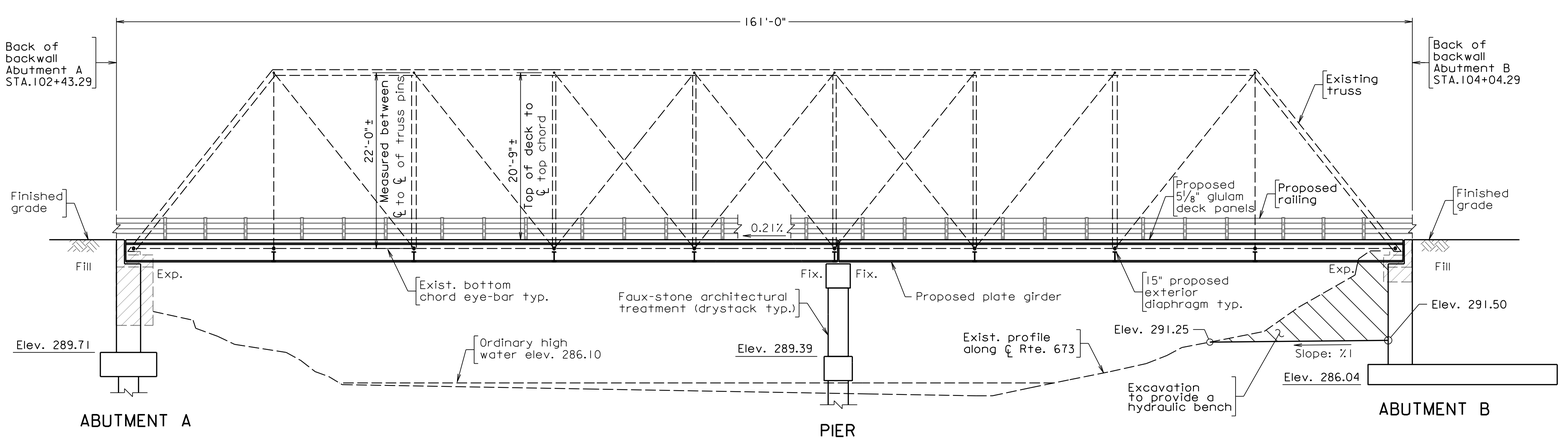

SECTION ALONG ℄ OF BRIDGE

Scale: ⅛" = 1'-0"

Proposed Public Hearing Plans

December 5, 2018

Virginia Department of Transportation

John G. Lewis Memorial Bridge over Catoctin Creek

Two-Span Steel Beam Bridge with Glu-Lam Timber Deck and Existing Truss

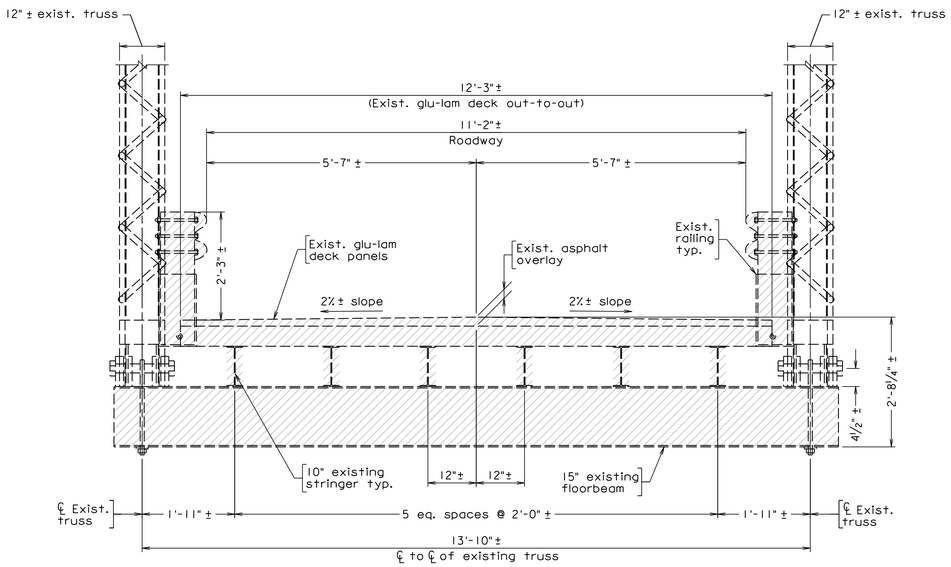

EXISTING STRUCTURE

Scale: ¾" = 1'-0"

Legend:

- - - - Existing structure
- Existing structure to be removed
- Proposed structure

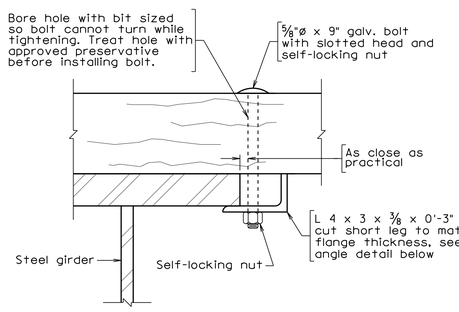

FASTENER DETAIL

Scale: 3" = 1'-0"

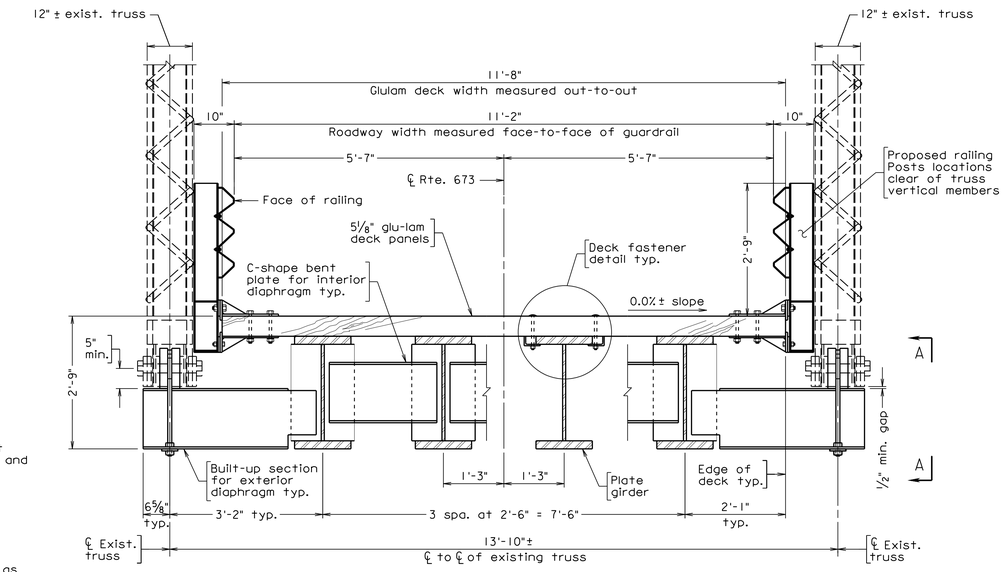

PROPOSED STRUCTURE

Scale: ¾" = 1'-0"

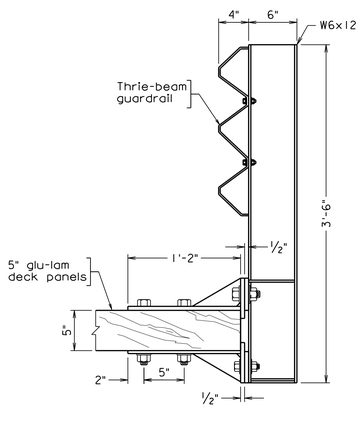

RAILING DETAIL

Scale: 1½" = 1'-0"

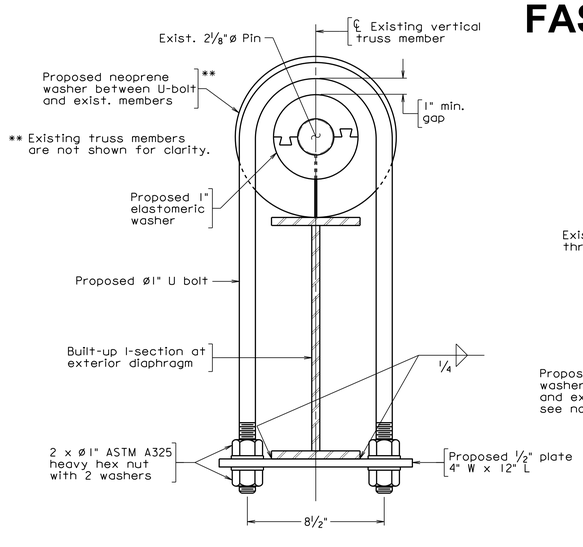

CONNECTION DETAIL

Scale: 1½" = 1'-0"

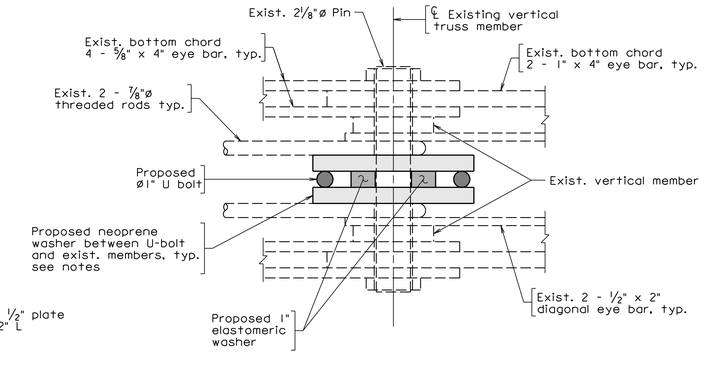

SECTION B-B

Scale: 1½" = 1'-0"

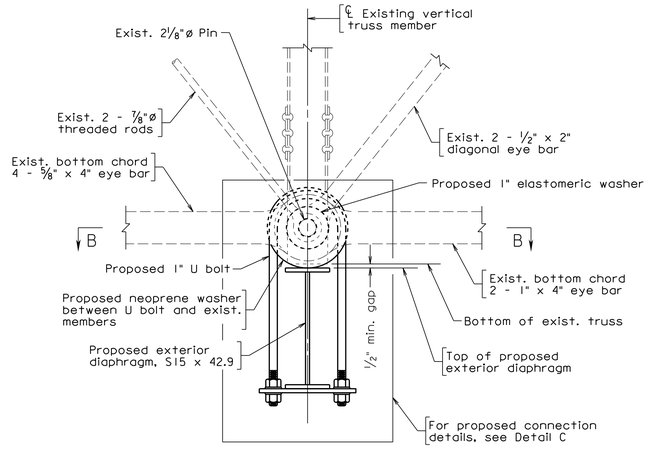

VIEW A-A*

Scale: 1½" = 1'-0"

* Bottom connection at midspan (L5) on south elevation of the existing truss is shown.

Proposed Public Hearing Plans

December 5, 2018

Virginia Department of Transportation

John G. Lewis Memorial Bridge over Catoctin Creek

Suggested Sequence of Construction

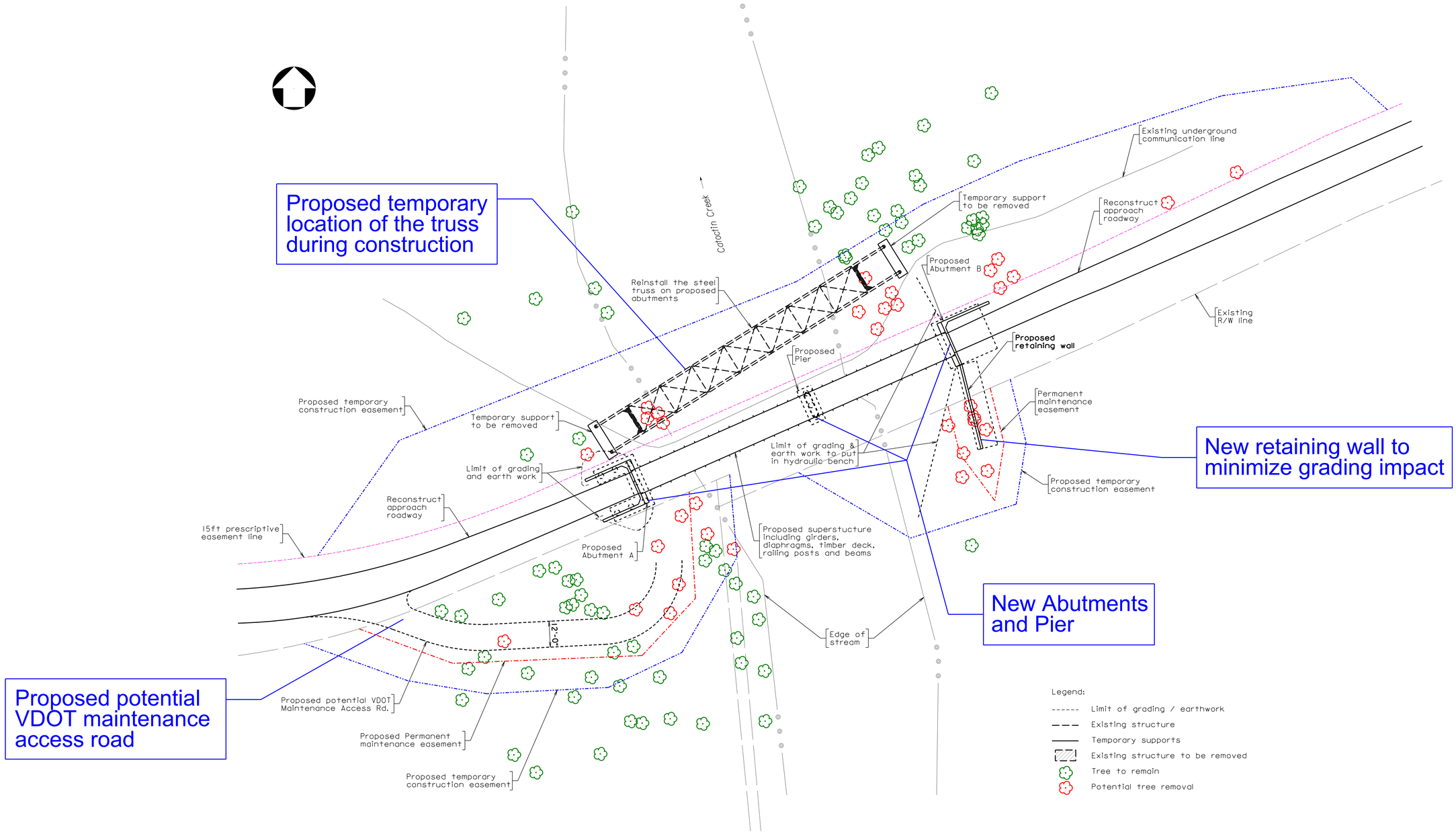

CONSTRUCTION STAGING

Scale: 1" = 20'-0"

Proposed Public Hearing Plans

December 5, 2018

Virginia Department of Transportation

John G. Lewis Memorial Bridge over Catoctin Creek

Proposed Detour Route

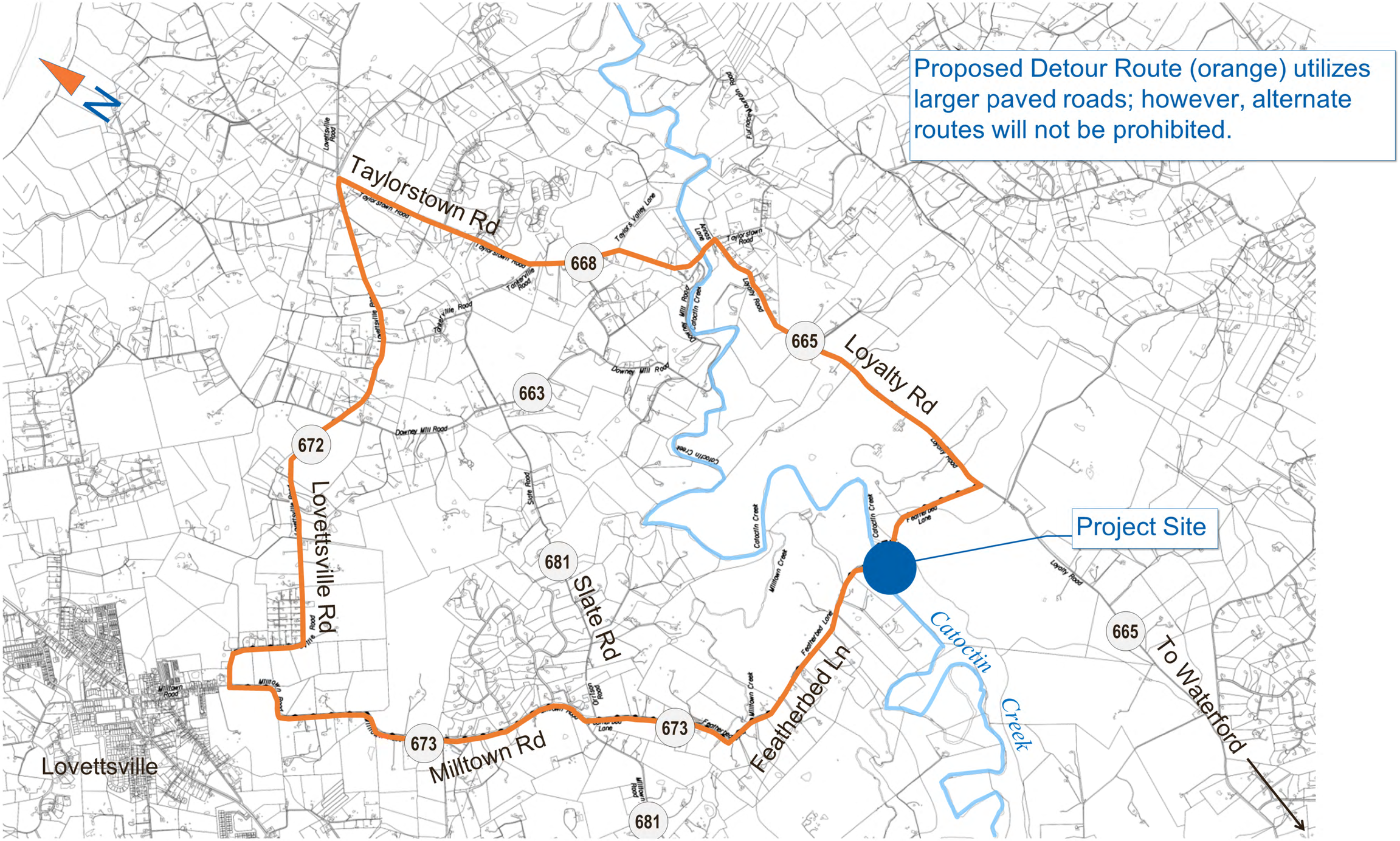

Proposed Public Hearing Plans

December 5, 2018