Wilson Blvd. Bridge (80ft span) - General Plan & Elevation

EB Wilson Blvd. (Rte. 613) over Arlington Blvd. (Rte. 50)
Fairfax County, Arlington County, and City of Falls Church, VA

Virginia Department of Transportation

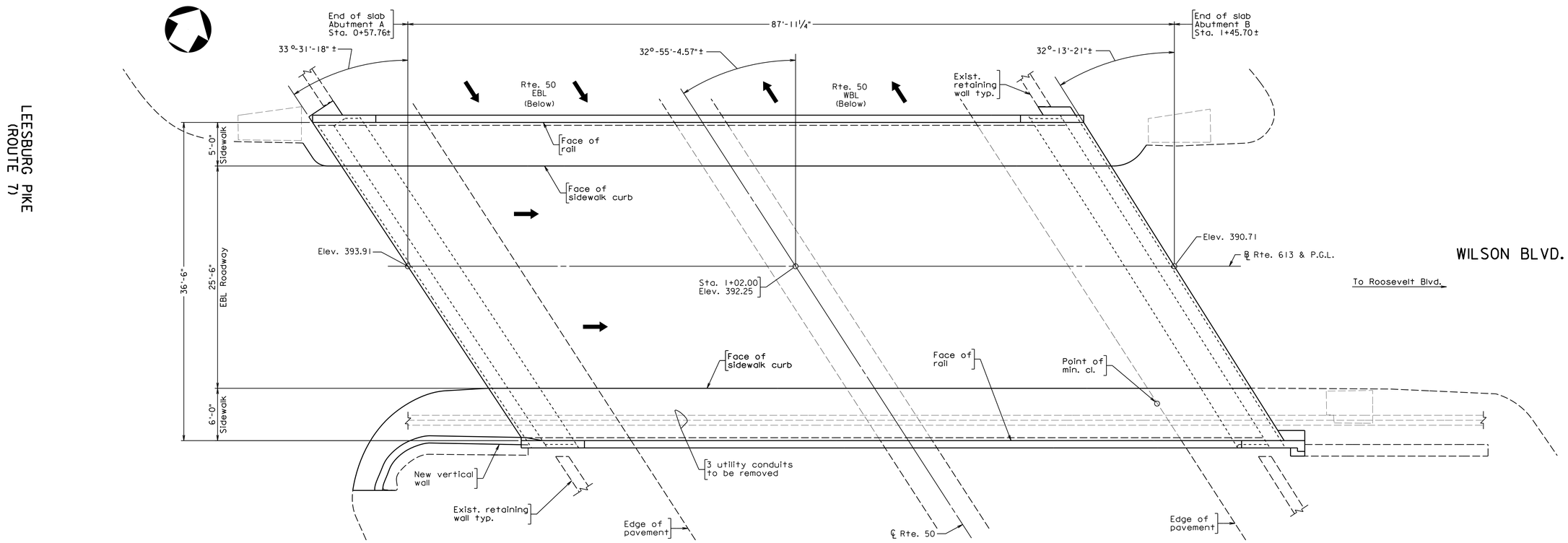

PLAN
Scale: 3/16" = 1'-0"

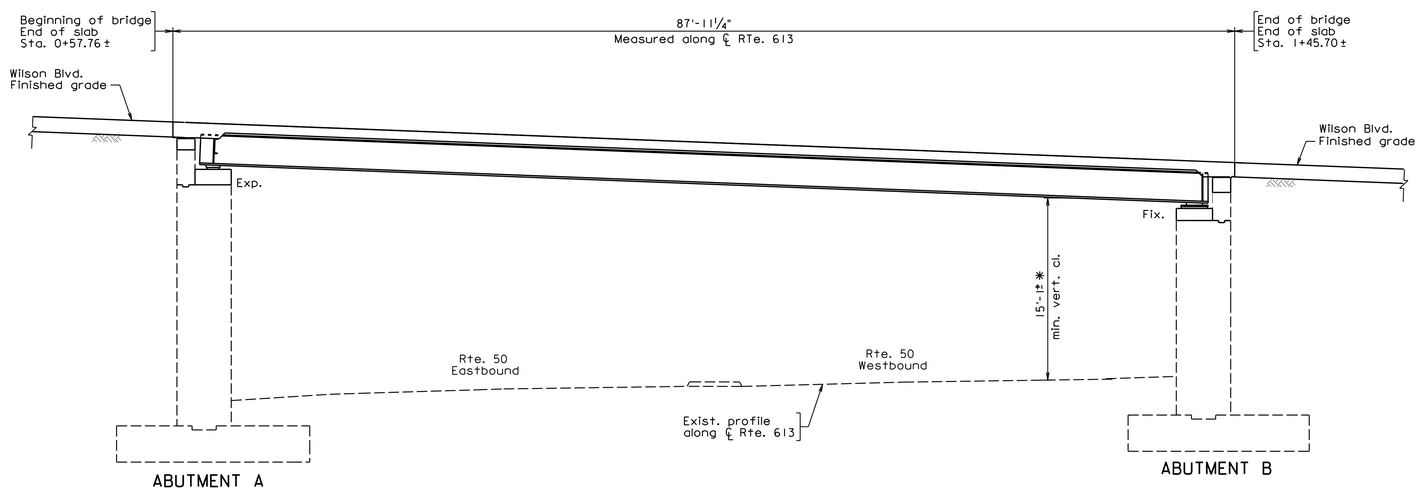

DEVELOPED SECTION ALONG ℄ RTE. 613
Scale: 3/16" = 1'-0"

* As per VDOT Inspection Report

COMMONWEALTH OF VIRGINIA
DEPARTMENT OF TRANSPORTATION
PROPOSED BRIDGE REPAIRS ON

WILSON BLVD. (ROUTE 613) OVER
ARLINGTON BLVD. (ROUTE 50)
FAIRFAX COUNTY - 0.03 MI. INT. RTE. 7
PROJ. 0613-029-380, B647

April 3, 2018

Wilson Blvd. Bridge (80ft span) - Typical Sections

EB Wilson Blvd. (Rte. 613) over Arlington Blvd. (Rte. 50)
Fairfax County, Arlington County, and City of Falls Church, VA

Virginia Department of Transportation

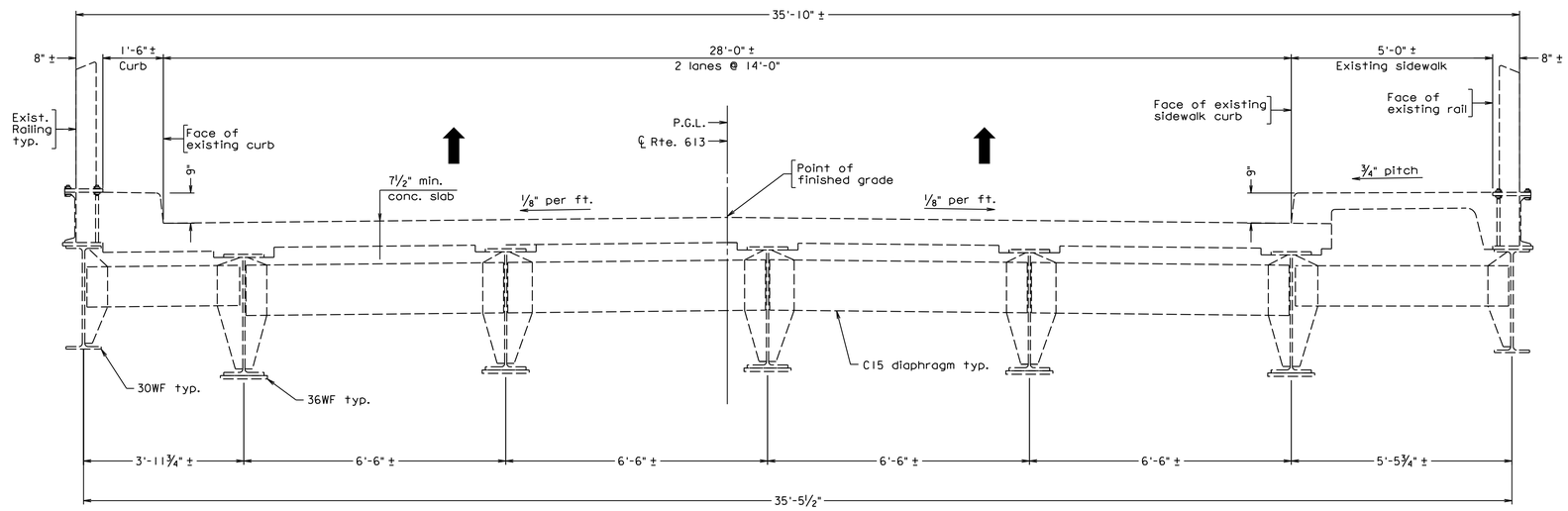

EXISTING TYPICAL SECTION

Scale: 5/8" = 1'-0"

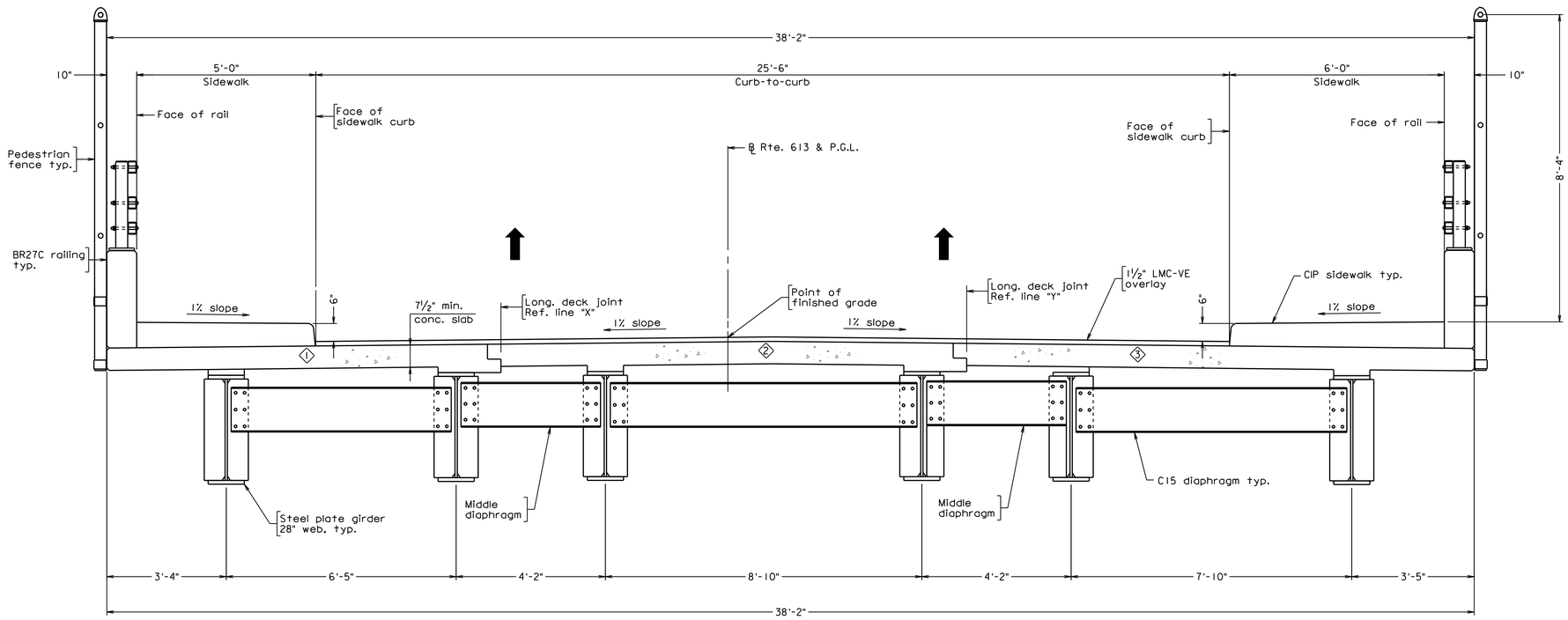

PROPOSED TYPICAL SECTION

Scale: 5/8" = 1'-0"

April 3, 2018

Virginia Department of Transportation

Proposed Detour During Bridge Closure Weekend

EB Wilson Blvd. (Rte. 613) over Arlington Blvd. (Rte. 50)
Fairfax County, Arlington County, and City of Falls Church, VA

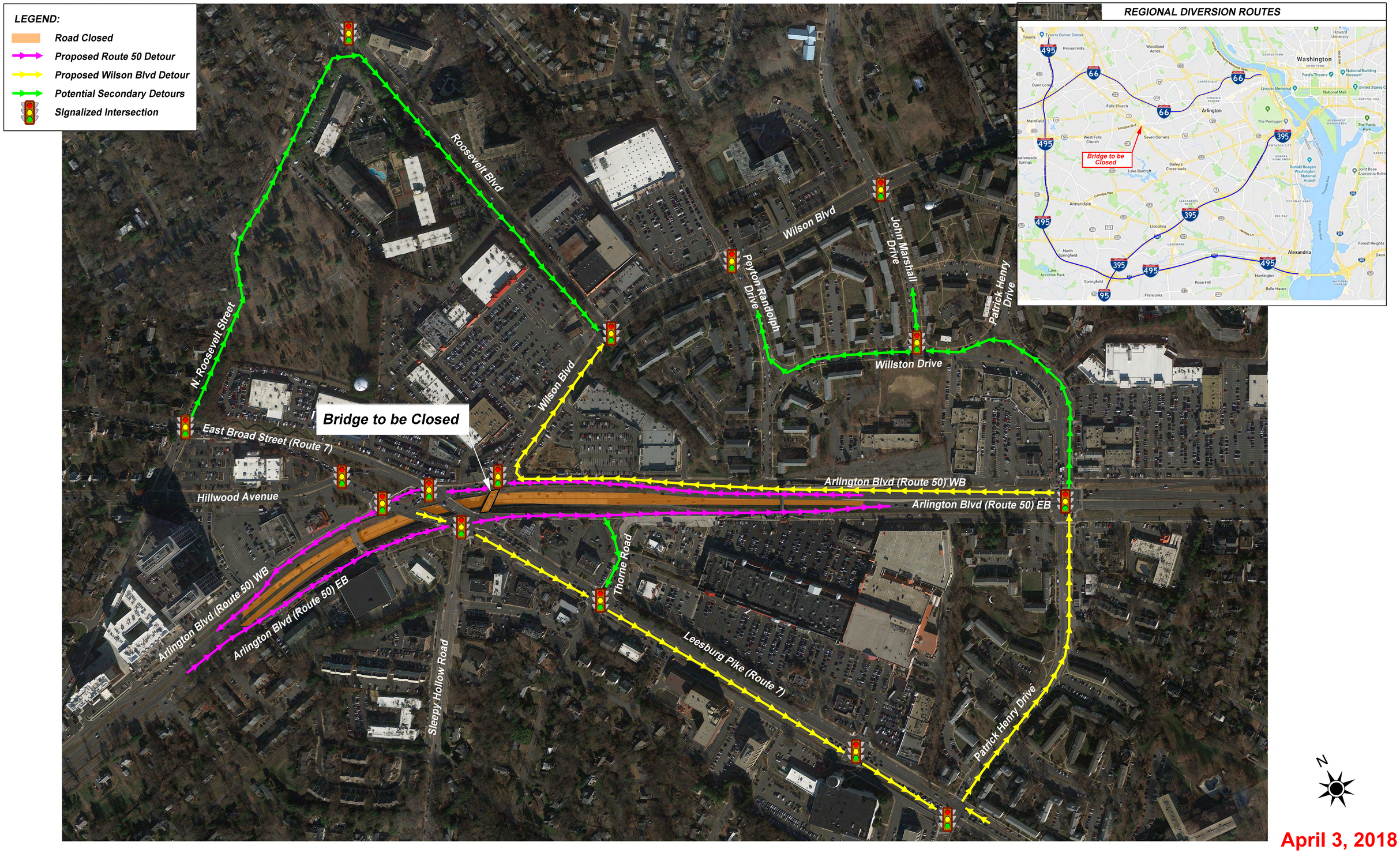

April 3, 2018